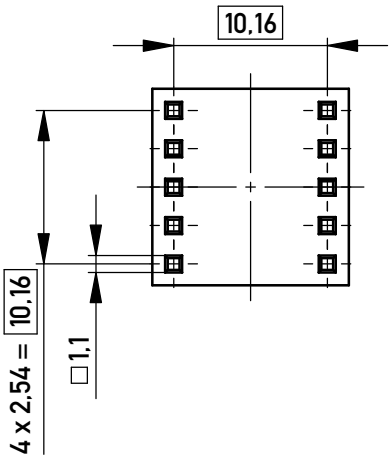

Schnitt A-A
cross section A-A

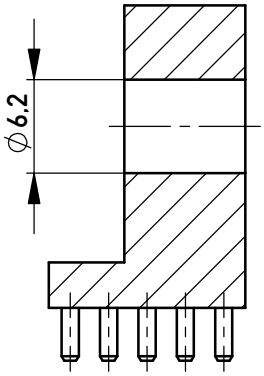

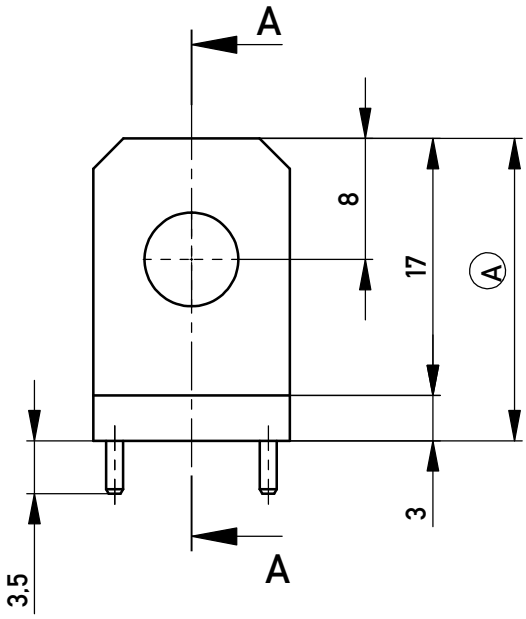

Layout - Vorschlag
PCB - Layout proposal
M /*scale* 1:1

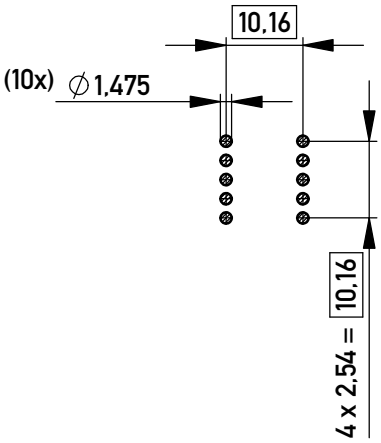

M / *scale* 1:1

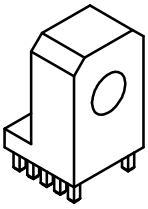

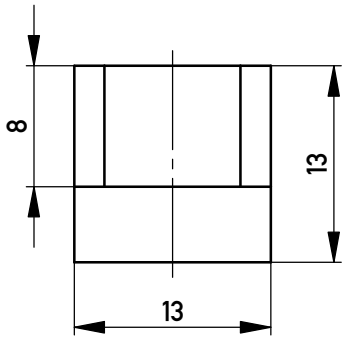

2-6µm Sn matt über 2-4µm Cu
2-6µm sn matt over 2-4µm cu
Ⓐ Oberfläche / *plating*

Information:	Tolerances	All Dimensions in mm	Scale 2:1
			Material: CuZn39Pb3
All rights reserved. Only for Information. To ensure that this is the latest version of this drawing, please contact one of the ERNI companies before using.	Subject to modification without prior notice. Drawing will not be updated.		Designation PowerElement angled *two row population d 6,2*
		www.ERNI.com	225720 — I — A4
b — 21.02.2018			
Index — Date			Class POWELM

Copyright by ERNI Production GmbH & Co. KG
Proprietary notice pursuant to ISO 16016 to be observed.