CATALOG NUMBER 323974

CUSTOMER COPY
FOR REFERENCE ONLY

USED ON
PART NO. 323966
SLEEVE ASS'Y. 321653
COMPLETE ASS'Y. 323974

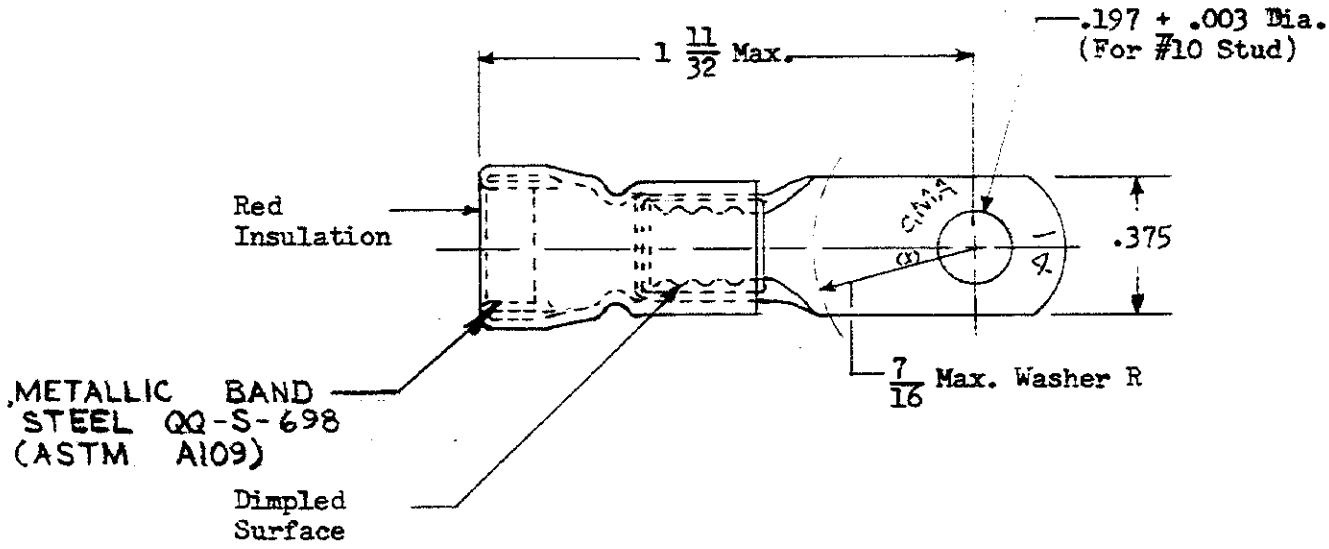

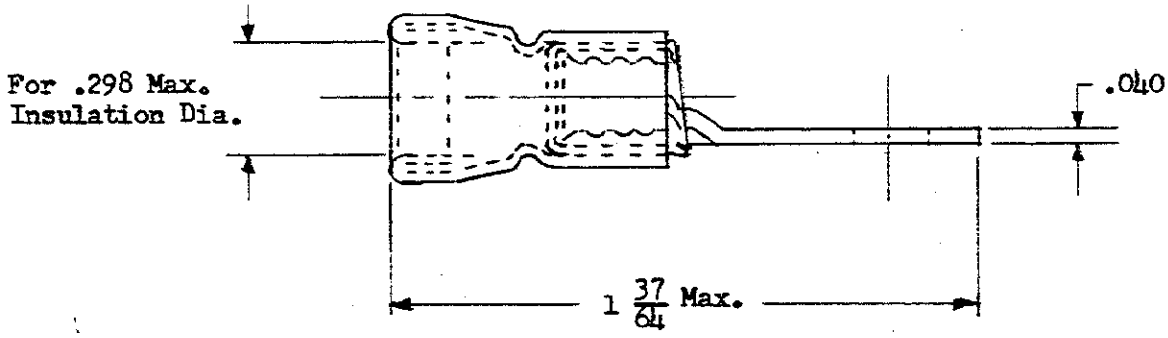

METALLIC BAND: STEEL QQ-S-698 (ASTM A109)

MATERIAL:- Copper

HEAT TREATMENT:- Annealed

FINISH:- Hot Electro - Tinned

COPYRIGHT IN U.S.A. 1956 BY AIRCRAFT-MARINE PRODUCTS, INC.
COPYRIGHT UNDER INTERNATIONAL COPYRIGHT UNION, ALL RIGHTS
RESERVED UNDER PAN-AMERICAN COPYRIGHT UNION (1910)

STA.	No.	ALT.
1		
2	1	
3		
4		
5		
6		
7		
8		
9		
10		
11		
12		
13		
14	KB	
15		
16		
17		
18		
19		
20		
21		
22		
23		
24		
25		

NO.	ALTERATION	DATE	BY	N.D.C
B	REV. G-4680	5-5-88		
A	REV. PER P-8547	4/9/79		

AIRCRAFT-MARINE PRODUCTS INC.
HARRISBURG, PA.

WIRE TERMINAL

CLASS	RING TONGUE
TYPE	AMPLI-BOND
SIZE	8 (SHIP 14)

TOLERANCES:- ALL DIMENSIONS ± ~ EXCEPT AS NOTED.

DR. H.M. Gonder	5-4-56	TR.	
CK. J.B. Fesler	5-7-56	APP. L.R. BROWN	5-7-56

SCALE:- 2-1

CATALOG NUMBER **323974**