THIS DRAWING IS UNPUBLISHED. RELEASED FOR PUBLICATION -,- .
© COPYRIGHT - BY TYCO ELECTRONICS CORPORATION. ALL RIGHTS RESERVED.

LOC	DIST
G	14

REVISIONS

P	LTR	DESCRIPTION	DATE	DWN	APVD
	L	REV PER 0G3A-0444-04	10JUN04	JR	CK

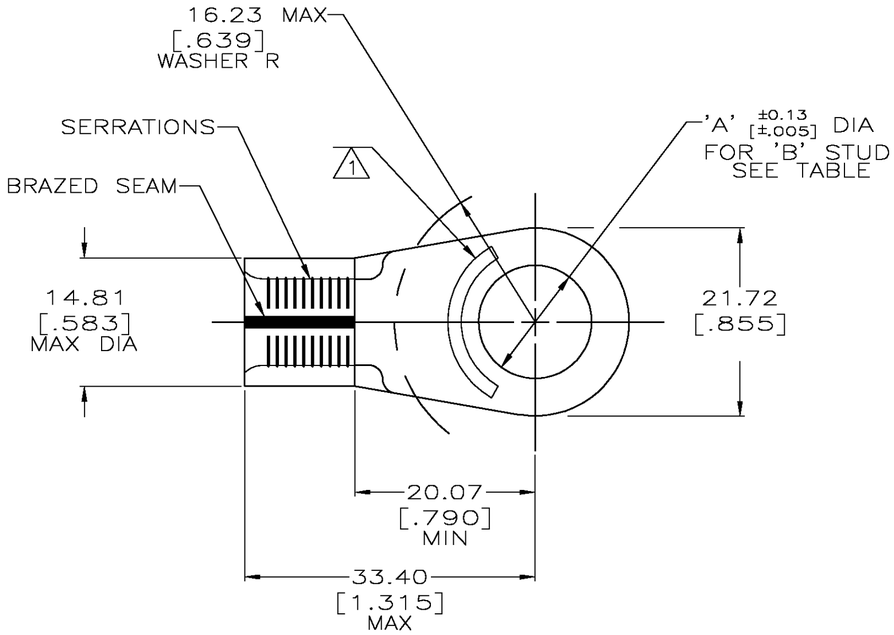

AMP WIRE RANGE	Listed FILE E13288	LR7189 Certified
2HD AWG SOLID OR STRANDED	2HD AWG STRANDED	2HD AWG SOLID OR STRANDED

1. STAMP AMP 2HDW* APPROX AS SHOWN
2. COPPER PER ASTM B-152, ANNEALED
3. 0.00254 [.000100] MIN TIN PER ASTM B-545

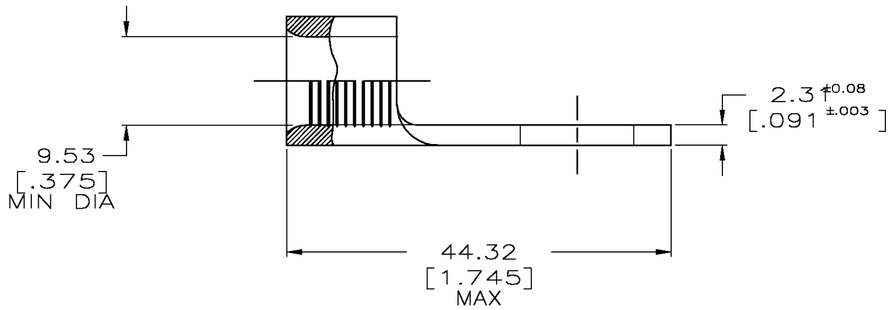

331423

	'A'	'B'	PART NO
	13.08[.515]	1/2	1-331423-1
	9.91[.390]	3/8	1-331423-0
OBSOLETE	~~6.73[.265]~~	~~1/4~~	~~331423~~

AMP INCORPORATED
CUSTOMER SERVICE SYSTEMS

FOR ADDITIONAL PRODUCT INFORMATION OR COPIES OF DRAWINGS AND TECHNICAL DOCUMENTS	PRODUCT INFORMATION CENTER 1-800-522-6752	
FOR APPLICATION TOOLING INFORMATION	TOOLING ASSISTANCE CENTER 1-800-722-1111	
FOR ORDER ENTRY	1-800-526-5142	THIS DRAWING IS A CONTROLLED DOCUMENT FOR AMP INCORPORATED. IT IS SUBJECT TO CHANGE AND THE CONTROLLING ENGINEERING ORGANIZATION SHOULD BE CONTACTED FOR THE LATEST REVISION.

MAX RECOMMENDED OPERATING TEMPERATURE: 170° C

VOLTAGE RATING: N/A

CIRCULAR MIL AREA: 26.7-42.4mm² [52,600-83,700] SOLID OR STRANDED

THIS DRAWING IS A CONTROLLED DOCUMENT.

DIMENSIONS: MM [INCHES]

TOLERANCES UNLESS OTHERWISE SPECIFIED:
0 PLC ± -
1 PLC ± -
2 PLC ± 0.20[.008]
3 PLC ± -
4 PLC ± -
ANGLES ± -

MATERIAL - 2

FINISH - 3

DWN	DK SCHRUM	8/6/93
CHK	AJ KAUFMAN	8/9/93
APVD	JL MECKLEY	8/9/93
PRODUCT SPEC	—	
APPLICATION SPEC	—	
WEIGHT	—	

Tyco Electronics Corporation
Harrisburg, Pa 17105-3608

NAME: TERMINAL, RING TONGUE, SOLISTRAND

SIZE	CAGE CODE	DRAWING NO	RESTRICTED TO
A2	00779	C-331423	—

CUSTOMER DRAWING | SCALE 2:1 | SHEET 1 OF 1 | REV L