THIS DRAWING IS UNPUBLISHED. RELEASED FOR PUBLICATION -,- .
© COPYRIGHT 2011 BY TYCO ELECTRONICS CORPORATION. ALL RIGHTS RESERVED.

LOC	DIST
DW	—

REVISIONS

P	LTR	DESCRIPTION	DATE	DWN	APVD
	B	REVISED (ECR-13-000294) DRAWING REDRAW & PRODUCT MATERIAL UPDATED	01APR'13	E.L.	W.K.

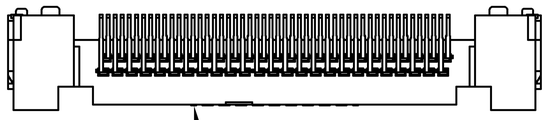

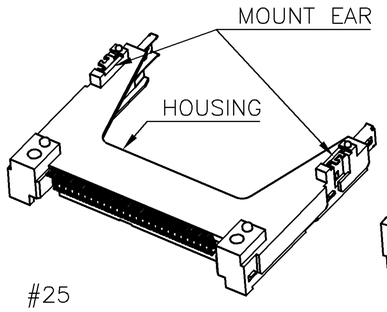

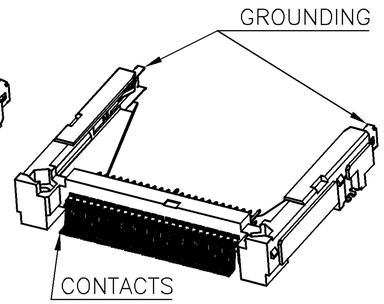

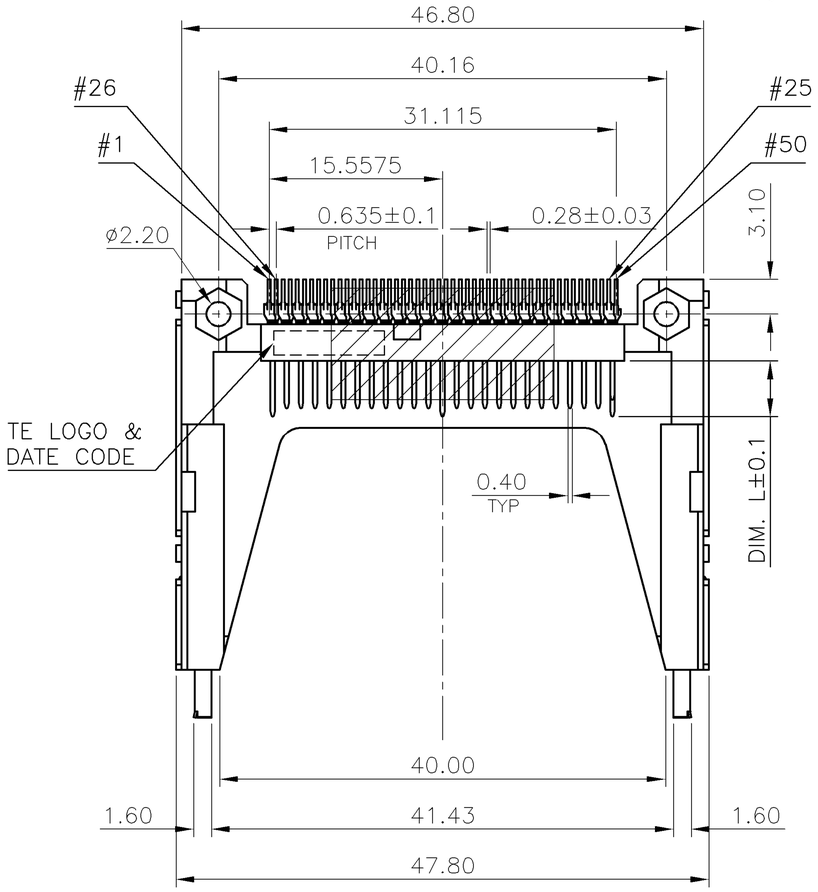

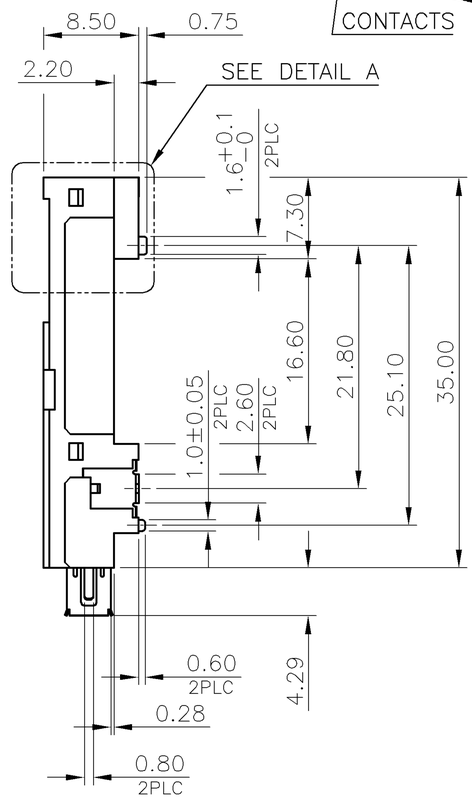

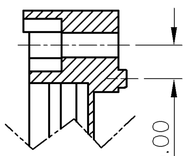

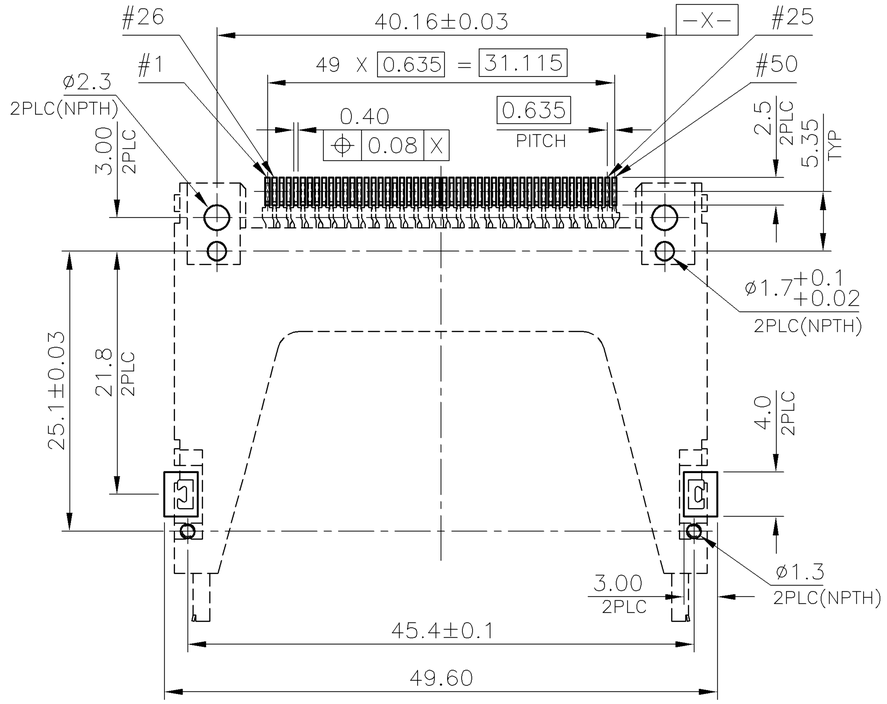

RECOMMENDED P.C.B LAYOUT
TOLERANCE: ±0.05

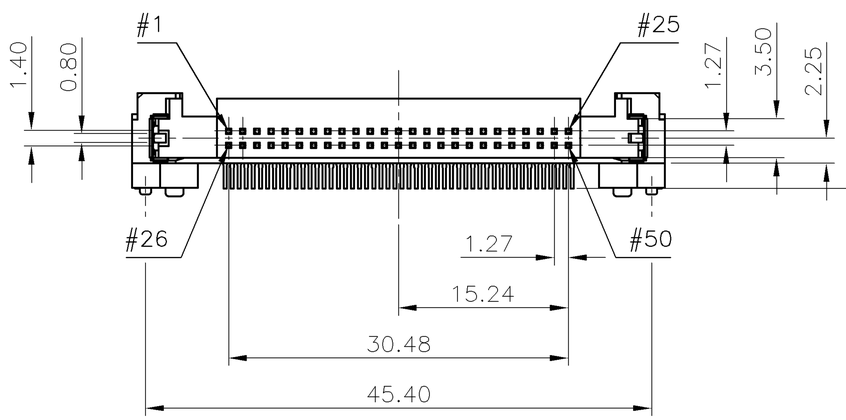

POWER	5.00mm	1, 13, 38, 50
GENERAL	4.25mm	ALL OTHER PINS
DETECT	3.50mm	25, 26
PIN TYPE	INTERFACE DIM. L	PIN NO.

NOTE:
1. MATERIAL:
   HOUSING: LCP WITH 30% GF, UL 94 V-0, WHITE COLOR.
   CONTACTS: BRASS.
   MOUNT EAR: BRASS.
   GROUNDING: STAINLESS STEEL.
   MYLAR (OPTION): POLYETHYLENE, YELLOR COLOR.
2. FINISH:
   CONTACTS: 0.381um [15u"] GOLD PLATED ON CONTACT AREA.
   2.54um [100u"] MIN. MATTE-TIN ON SOLDER TAIL.
   1.27um [50u"] MIN. NICKEL UNDERPLATED OVERALL.
   MOUNT EAR: 2.54um [100u"] MIN. TIN PLATED ON SOLDER AREA
   1.27um [50u"] MIN. NICKEL UNDERPLATED ALL OVER.
3. REFLOW SOLDER CAPABLE TO 260°C PER TYCO TEST SPEC. 109-201, CONDITION B.

TRAY	W/	1-1734450-1
	W/O	1734450-1
PACKAGE	MYLAR	PART NUMBER

THIS DRAWING IS A CONTROLLED DOCUMENT.

DIMENSIONS: mm

TOLERANCES UNLESS OTHERWISE SPECIFIED:

0 PLC	± -
1 PLC	± 0.3
2 PLC	± 0.2
3 PLC	± 0.15
4 PLC	± -
ANGLES	± 3°

MATERIAL: SEE NOTE
FINISH: SEE NOTE

DWN	O. HU	03MAY2007
CHK	S. HOU	03MAY2007
APVD	W.J. KE	03MAY2007
PRODUCT SPEC	108-57134	
APPLICATION SPEC	—	
WEIGHT	4.59 GRAMS	

TE Connectivity

NAME: COMPACT FLASH CARD CONNECTOR HEADER ASSEMBLY, 50 POS TOP MOUNT, SMT TYPE, STAND OFF 2.2mm

SIZE	CAGE CODE	DRAWING NO	RESTRICTED TO
A3	00779	C-1734450	—

CUSTOMER DRAWING | SCALE — | SHEET 1 OF 2 | REV B

THIS DRAWING IS UNPUBLISHED. RELEASED FOR PUBLICATION -,- .
© COPYRIGHT 2011 BY TYCO ELECTRONICS CORPORATION. ALL RIGHTS RESERVED.

LOC	DIST
DW	—

REVISIONS

P	LTR	DESCRIPTION	DATE	DWN	APVD
		SEE SHEET 1.			

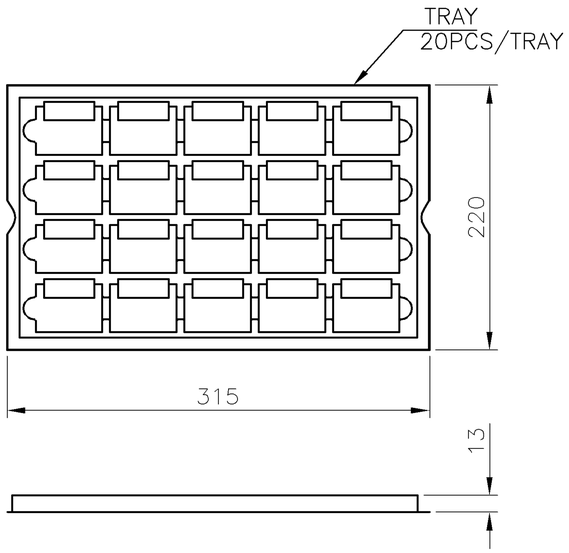

NOTES :
1. MATERIAL :
   TRAY : PS.
   BAG : PE
   BOX : CORRUGATED FIBERBOARD.
2. DIMENSION :
   TRAY : L=346mm, W=215mm, H=7.5mm
   BAG : L=600mm, W=500mm, THNICK=0.1mm
   BOX : L=356mm, W=225mm, H=292mm
3. EACH BAG SHALL BE INCLUDED:
   * DESICCANT

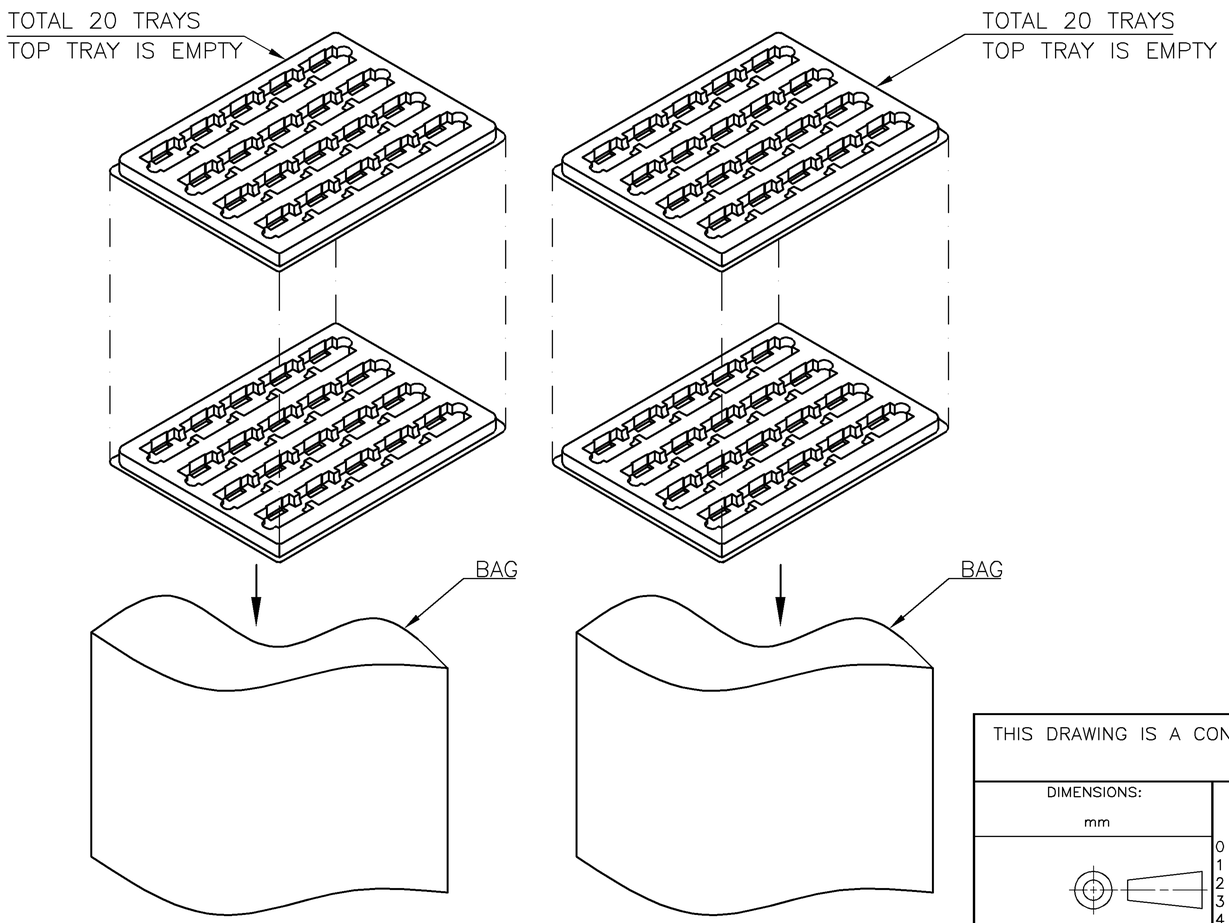

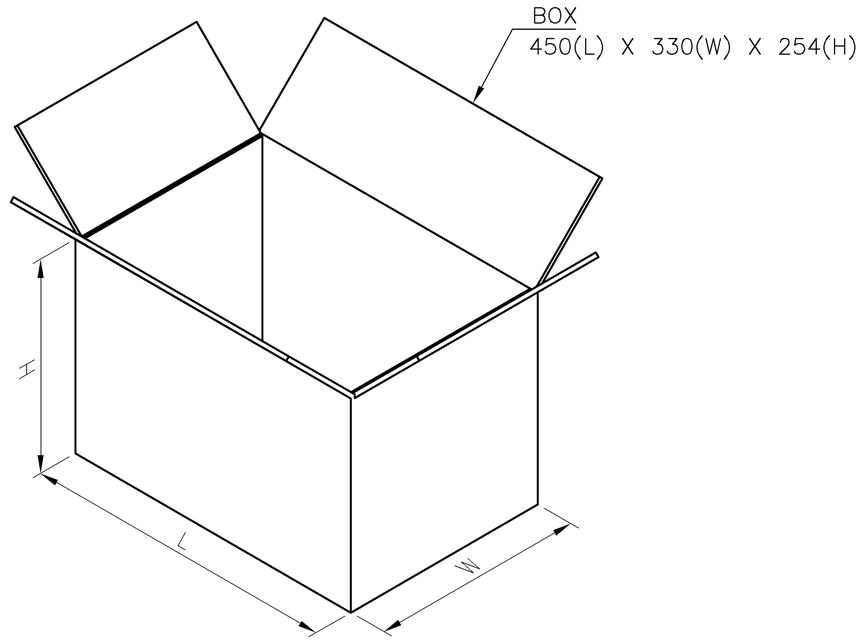

5.56 Kg	3.65 Kg	20	20	2	800
GROSS WEIGHT	NET WEIGHT	PCS/ TRAY	TRAY/ BAG	BAG/ BOX	PCS/ BOX

THIS DRAWING IS A CONTROLLED DOCUMENT.

DIMENSIONS: mm

TOLERANCES UNLESS OTHERWISE SPECIFIED:

0 PLC	± –
1 PLC	± 0.3
2 PLC	± 0.2
3 PLC	± 0.15
4 PLC	± –
ANGLES	± 3°

MATERIAL –

FINISH –

DWN –
CHK –
APVD –
PRODUCT SPEC –
APPLICATION SPEC –
WEIGHT –

TE Connectivity

NAME
COMPACT FLASH CARD CONNECTOR
HEADER ASSEMBLY, 50 POS
TOP MOUNT, SMT TYPE, STAND OFF 2.2mm

SIZE	CAGE CODE	DRAWING NO	RESTRICTED TO
A3	00779	C-1734450	—

CUSTOMER DRAWING | SCALE — | SHEET 2 OF 2 | REV B

1470-19 (1/08)