NOT RECOMMENDED FOR NEW DESIGNS - THE ISL98001-170 IS A 100% COMPATIBLE IMPROVED ALTERNATIVE

X98017

170MHz Triple Video Digitizer with Digital PLL

FN8218
Rev 3.00
March 8, 2006

The X98017 3-channel, 8-bit Analog Front End (AFE) contains all the components necessary to digitize analog RGB or YUV graphics signals from personal computers, workstations and video set-top boxes. The fully differential analog design provides high PSRR and dynamic performance to meet the stringent requirements of the graphics display industry. The AFE's 170MSPS conversion rate supports resolutions up to UXGA at 60Hz refresh rate, while the front end's high input bandwidth ensures sharp images at the highest resolutions.

To minimize noise, the X98017's analog section features 2 sets of pseudo-differential RGB inputs with programmable input bandwidth, as well as internal DC restore clamping (including mid-scale clamping for YUV signals). This is followed by the programmable gain/offset stage and the three 170MSPS Analog-to-Digital Converters (ADCs). Automatic Black Level Compensation (ABLC™) eliminates part-to-part offset variation, ensuring perfect black level performance in every application.

The X98017's digital PLL generates a pixel clock from the analog source's HSYNC or SOG (Sync-On-Green) signals. Pixel clock output frequencies range from 10MHz to 170MHz with sampling clock jitter of 250ps peak to peak.

Features

- 170MSPS maximum conversion rate
- Low PLL clock jitter (250ps p-p @ 170MSPS)
- 64 interpixel sampling positions
- $0.35V_{p-p}$ to $1.4V_{p-p}$ video input range
- Programmable bandwidth (100MHz to 780MHz)
- 2 channel input multiplexer
- RGB and YUV 4:2:2 output formats
- 5 embedded voltage regulators allow operation from single 3.3V supply and enhance performance, isolation
- Completely independent 8 bit gain/10 bit offset control
- CSYNC and SOG support
- Trilevel sync detection
- 1.05W typical P_D @ 170MSPS
- Pb-free plus anneal available (RoHS compliant)

Applications

- LCD Monitors and Projectors
- Digital TVs
- Plasma Display Panels
- RGB Graphics Processing
- Scan Converters

Simplified Block Diagram

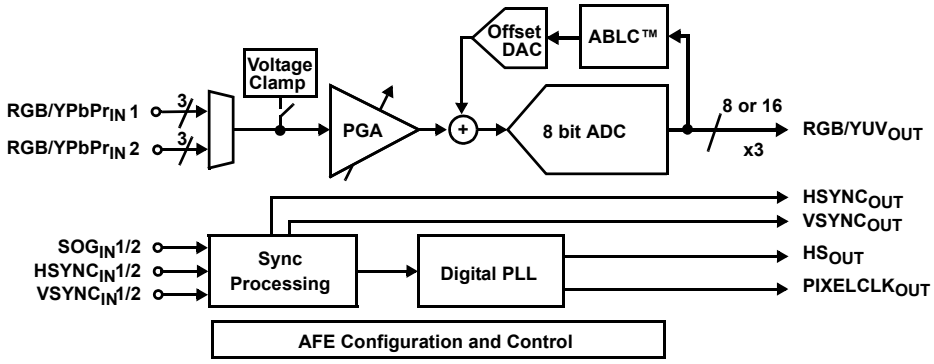

Ordering Information

PART NUMBER	PART MARKING	MAXIMUM PIXEL RATE	TEMP RANGE (°C)	PACKAGE
X98017L128-3.3	X98017L-3.3	170MHz	0 to 70	128 MQFP
X98017L128-3.3-Z (See Note)	X98017L-3.3Z	170MHz	0 to 70	128 MQFP (Pb-free)

NOTE: Intersil Pb-free plus anneal products employ special Pb-free material sets; molding compounds/die attach materials and 100% matte tin plate termination finish, which are RoHS compliant and compatible with both SnPb and Pb-free soldering operations. Intersil Pb-free products are MSL classified at Pb-free peak reflow temperatures that meet or exceed the Pb-free requirements of IPC/JEDEC J STD-020.

Block Diagram

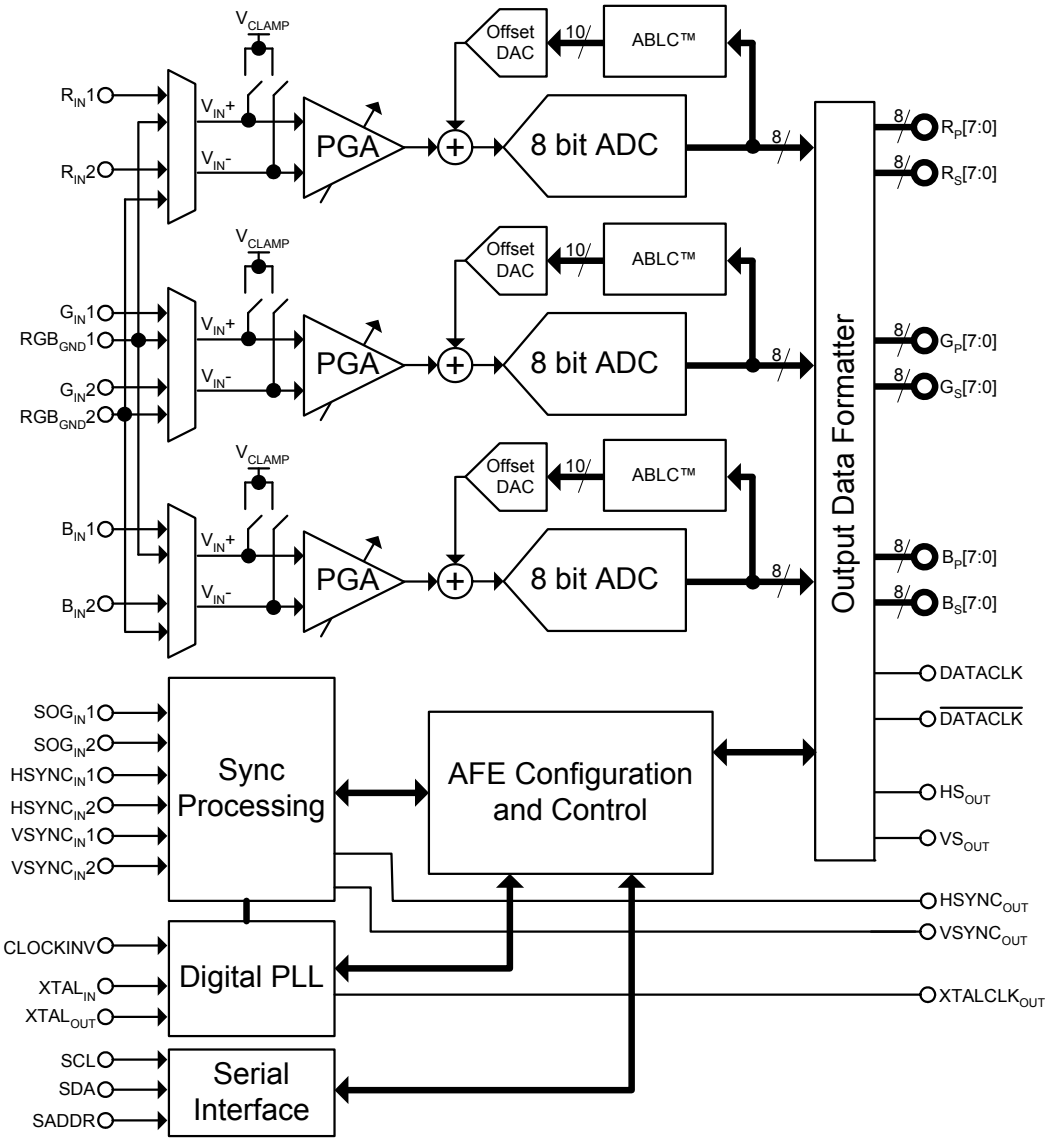

Absolute Maximum Ratings

Voltage on V_A, V_D, or V_X
(referenced to GND_A=GND_D=GND_X) 4.0V
Voltage on any analog input pin
(referenced to GND_A) . . . . . -0.3V to V_A
Voltage on any digital input pin
(referenced to GND_D) . . . . . -0.3V to +6.0V
Current into any output pin . . . . . ±20mA
Operating Temperature range . . . . . 0°C to +70°C
Junction Temperature . . . . . +125°C
Storage Temperature. . . . . -65°C to +150°C

Recommended Operating Conditions

Temperature (Commercial) . . . . . 0°C to +70°C
Supply Voltage. . . . . V_A = V_D = V_X = 3.3V

CAUTION: Stresses above those listed under "Absolute Maximum Ratings" may cause permanent damage to the device. This is a stress rating only; functional operation of the device (at these or any other conditions above those listed in the operational sections of this specification) is not implied. Exposure to absolute maximum rating conditions for extended periods may affect device reliability.

Electrical Specifications

Specifications apply for V_A = V_D = V_X = 3.3V, pixel rate = 170MHz, f_{XTAL} = 25MHz, T_A = 25°C, unless otherwise noted

SYMBOL	PARAMETER	COMMENT	MIN	TYP	MAX	UNIT
FULL CHANNEL CHARACTERISTICS						
	ADC Resolution		8			Bits
	Missing Codes	Guaranteed monotonic			None	
	Conversion Rate	Per Channel	10		170	MHz
DNL	Differential Non-Linearity			±0.5	+1.0 -0.9	LSB
INL	Integral Non-Linearity			±1.1	±3.25	LSB
	Gain Adjustment Range			±6		dB
	Gain Adjustment Resolution			8		Bits
	Gain Matching Between Channels	Percent of full scale		±1		%
	Full Channel Offset Error, ABLC™ enabled	ADC LSBs, over time and temperature		±0.125	±0.5	LSB
	Offset Adjustment Range, ABLC™ enabled or disabled	ADC LSBs (see ABLC™ applications information section)		±127		LSB
	Overvoltage Recovery Time	For 150% overrange, maximum bandwidth setting		5		ns
ANALOG VIDEO INPUT CHARACTERISTICS ($R_{IN}1$, $G_{IN}1$, $B_{IN}1$, $R_{IN}2$, $G_{IN}2$, $B_{IN}2$)						
	Input Range		0.35	0.7	1.4	V_{P-P}
	Input Bias Current	DC restore clamp off		±0.01	±1	µA
	Input Capacitance			5		pF
	Full Power Bandwidth	Programmable		780		MHz
INPUT CHARACTERISTICS ($SOG_{IN}1$, $SOG_{IN}2$)						
V_{IH}/V_{IL}	Input Threshold Voltage	Programmable - See Register Listing for Details		0 to -0.3		V
	Hysteresis	Centered around threshold voltage		40		mV
	Input capacitance			5		pF
INPUT CHARACTERISTICS ($HSYNC_{IN}1$, $HSYNC_{IN}2$)						
V_{IH}/V_{IL}	Input Threshold Voltage	Programmable - See Register Listing for Details		0.4 to 3.2		V
	Hysteresis	Centered around threshold voltage		240		mV
R_{IN}	Input impedance			1.2		kΩ

Electrical Specifications Specifications apply for $V_A = V_D = V_X = 3.3V$, pixel rate = 170MHz, f_{XTAL} = 25MHz, T_A = 25°C, unless otherwise noted **(Continued)**

SYMBOL	PARAMETER	COMMENT	MIN	TYP	MAX	UNIT
	Input capacitance			5		pF
DIGITAL INPUT CHARACTERISTICS (SDA, SADDR, CLOCKINV$_{IN}$, $\overline{RESET}$)						
V_{IH}	Input HIGH Voltage		2.0			V
V_{IL}	Input LOW Voltage				0.8	V
I	Input leakage current	$\overline{RESET}$ has a 70kΩ pullup to V_D		±10		nA
	Input capacitance			5		pF
SCHMITT DIGITAL INPUT CHARACTERISTICS (SCL, VSYNC$_{IN}$1, VSYNC$_{IN}$2)						
V_T+	Low to High Threshold Voltage		1.45			V
V_T-	High to Low Threshold Voltage				0.95	V
I	Input leakage current			±10		nA
	Input capacitance			5		pF
DIGITAL OUTPUT CHARACTERISTICS (DATACLK, $\overline{DATACLK}$)						
V_{OH}	Output HIGH Voltage, I_O = 16mA		2.4			V
V_{OL}	Output LOW Voltage, I_O = -16mA				0.4	V
DIGITAL OUTPUT CHARACTERISTICS (R_P, G_P, B_P, R_S, G_S, B_S, HS$_{OUT}$, VS$_{OUT}$, HSYNC$_{OUT}$, VSYNC$_{OUT}$)						
V_{OH}	Output HIGH Voltage, I_O = 8mA		2.4			V
V_{OL}	Output LOW Voltage, I_O = -8mA				0.4	V
R_{TRI}	Pulldown to GND_D when three-state	R_P, G_P, B_P, R_S, G_S, B_S only		58		kΩ
DIGITAL OUTPUT CHARACTERISTICS (SDA, XTALCLK$_{OUT}$)						
V_{OH}	Output HIGH Voltage, I_O = 4mA	XTALCLK$_{OUT}$ only; SDA is open-drain	2.4			V
V_{OL}	Output LOW Voltage, I_O = -4mA				0.4	V
POWER SUPPLY REQUIREMENTS						
V_A	Analog Supply Voltage		3	3.3	3.6	V
V_D	Digital Supply Voltage		3	3.3	3.6	V
V_X	Crystal Oscillator Supply Voltage		3	3.3	3.6	V
I_A	Analog Supply Current	Operating		185	195	mA
I_D	Digital Supply Current	Operating (grayscale)		135	145	mA
I_X	Crystal Oscillator Supply Current			0.7	2	mA
P_D	Total Power Dissipation	Operating (average)		1.05	1.25	W
		Power-down Mode		50	80	mW
Θ_{JA}	Thermal Resistance, Junction to Ambient			30		°C/W
AC TIMING CHARACTERISTICS						
	PLL Jitter			250	450	ps p-p
	Sampling Phase Steps	5.6° per step	64			
	Sampling Phase Tempco			±1		ps/°C
	Sampling Phase Differential Nonlinearity	Degrees out of 360°		±3		°
	HSYNC Frequency Range		10		150	kHz
f_{XTAL}	Crystal Frequency Range		23	25	27	MHz

Electrical Specifications Specifications apply for $V_A = V_D = V_X = 3.3V$, pixel rate = 170MHz, $f_{XTAL} = 25MHz$, $T_A = 25°C$, unless otherwise noted **(Continued)**

SYMBOL	PARAMETER	COMMENT	MIN	TYP	MAX	UNIT
t_{SETUP}	DATA valid before rising edge of DATACLK	15pF DATACLK load, 15pF DATA load (Note 1)	1.3			ns
t_{HOLD}	DATA valid after rising edge of DATACLK	15pF DATACLK load, 15pF DATA load (Note 1)	2.0			ns
AC TIMING CHARACTERISTICS (2 WIRE INTERFACE)						
f_{SCL}	SCL Clock Frequency		0		400	kHz
	Maximum width of a glitch on SCL that will be suppressed	2 XTAL periods min	80			ns
t_{AA}	SCL LOW to SDA Data Out Valid	5 XTAL periods plus SDA's RC time constant			See comment	µs
t_{BUF}	Time the bus must be free before a new transmission can start		1.3			µs
t_{LOW}	Clock LOW Time		1.3			µs
t_{HIGH}	Clock HIGH Time		0.6			µs
$t_{SU:STA}$	Start Condition Setup Time		0.6			µs
$t_{HD:STA}$	Start Condition Hold Time		0.6			µs
$t_{SU:DAT}$	Data In Setup Time		100			ns
$t_{HD:DAT}$	Data In Hold Time		0			ns
$t_{SU:STO}$	Stop Condition Setup Time		0.6			µs
t_{DH}	Data Output Hold Time	4 XTAL periods min	160			ns

NOTES:

1. Setup and hold times are at a 140MHz DATACLK rate.

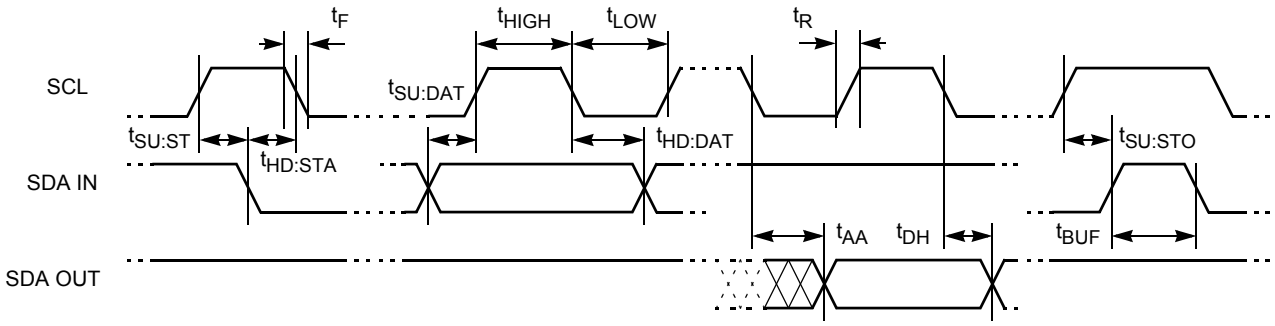

FIGURE 1. 2 WIRE INTERFACE TIMING

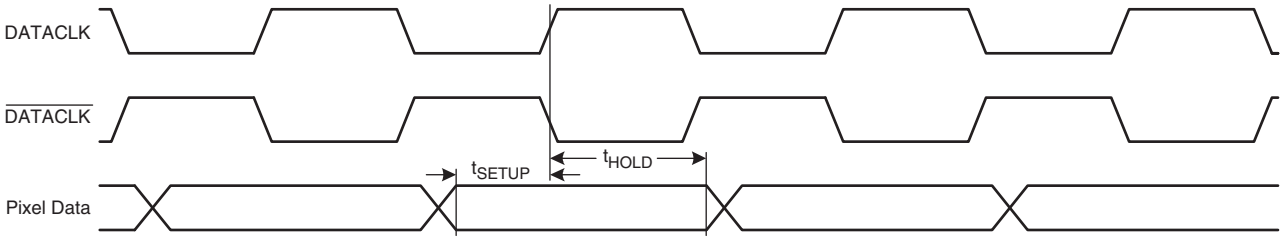

FIGURE 2. DATA OUTPUT SETUP AND HOLD TIMING

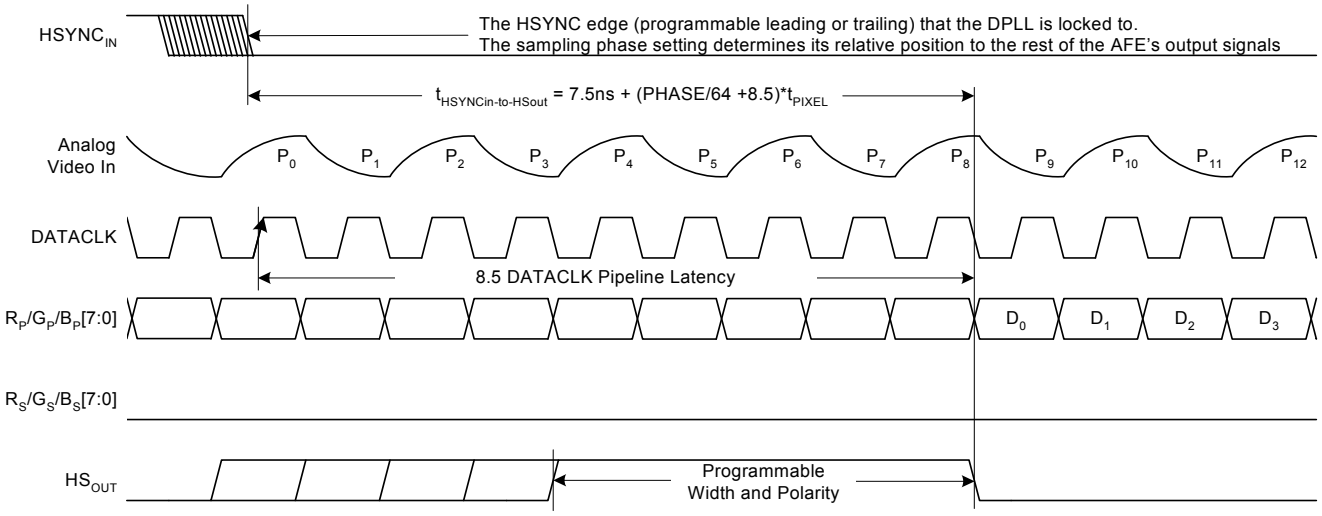

FIGURE 3. 24 BIT OUTPUT MODE

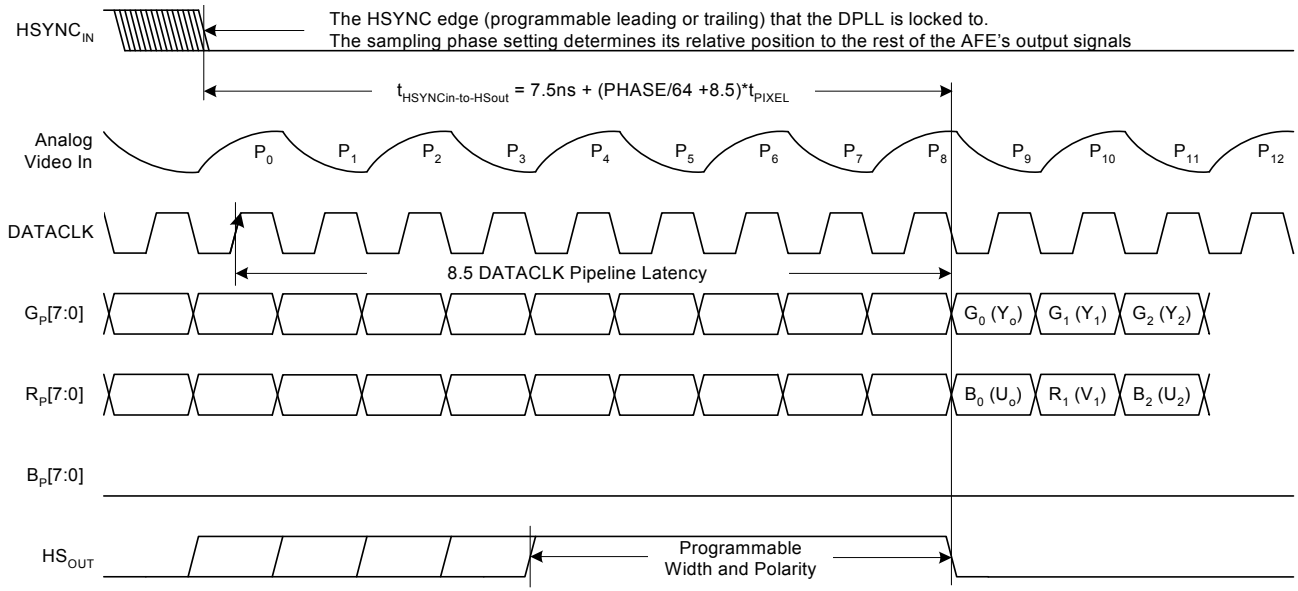

FIGURE 4. 24 BIT 4:2:2 OUTPUT MODE (FOR YUV SIGNALS)

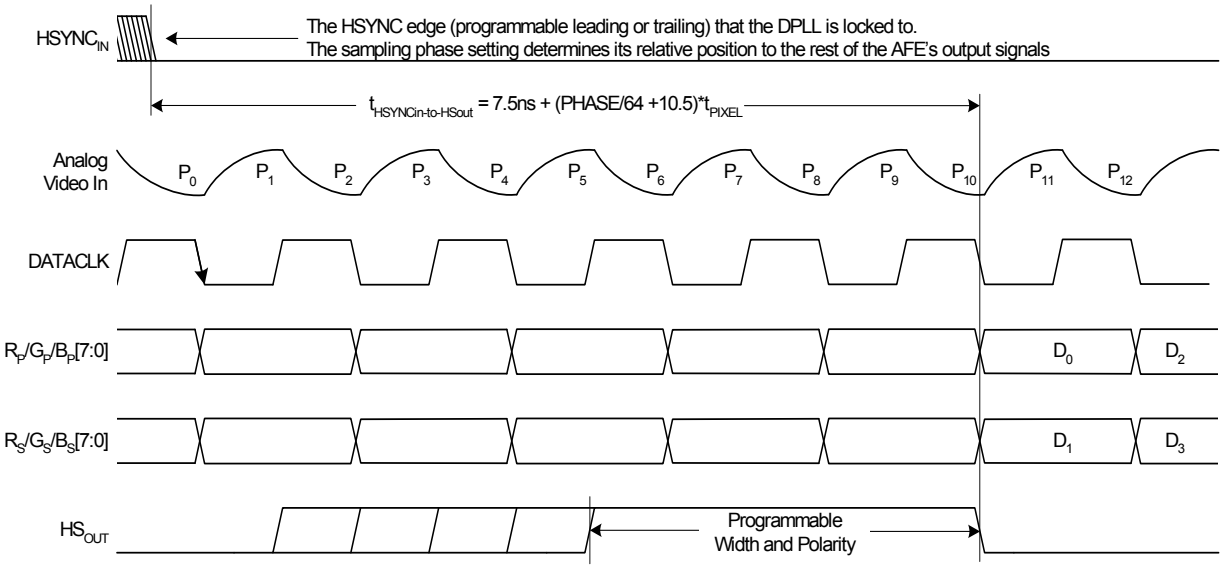

FIGURE 5. 48 BIT OUTPUT MODE

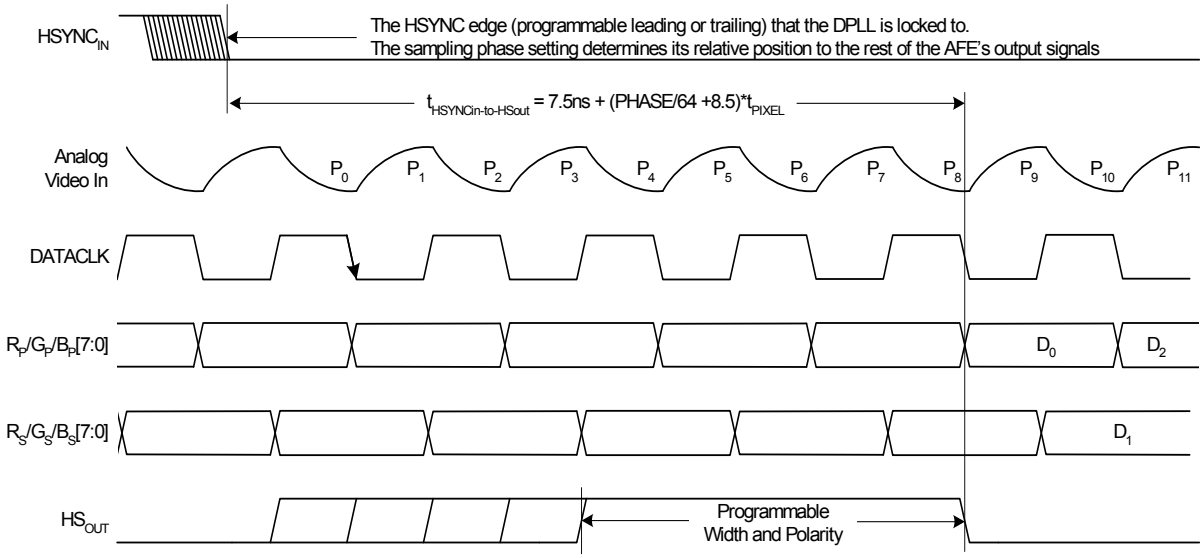

FIGURE 6. 48 BIT OUTPUT MODE, INTERLEAVED TIMING

Pinout

X98017
(128-PIN MQFP)
TOP VIEW

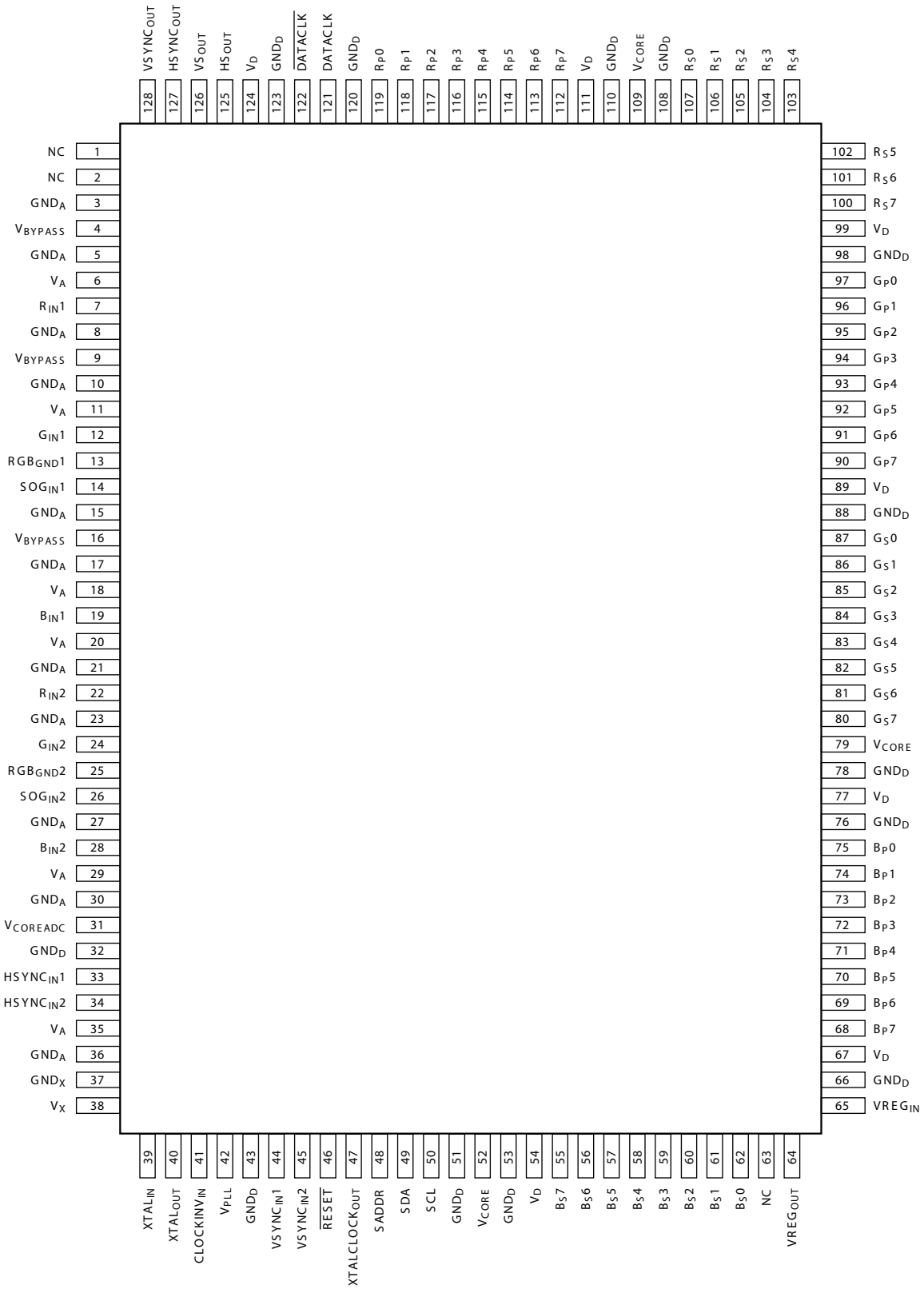

Pin Descriptions

SYMBOL	PIN	DESCRIPTION
$R_{IN}1$	7	Analog input. Red channel 1. DC couple or AC couple through 0.1µF.
$G_{IN}1$	12	Analog input. Green channel 1. DC couple or AC couple through 0.1µF.
$B_{IN}1$	19	Analog input. Blue channel 1. DC couple or AC couple through 0.1µF.
$RGB_{GND}1$	13	Analog input. Ground reference for the R, G, and B inputs of channel 1 in the DC coupled configuration. Connect to the same ground as channel 1's R, G, and B termination resistors. This signal is not used in the AC-coupled configuration, but the pin should still be tied to GND_A.
$SOG_{IN}1$	14	Analog input. Sync on Green. Connect to $G_{IN}1$ through a 0.01µF capacitor in series with a 500Ω resistor.
$HSYNC_{IN}1$	33	Digital input, 5V tolerant, 240mV hysteresis, 1.2kΩ impedance to GND_A. Connect to channel 1's HSYNC signal through a 680Ω series resistor.
$VSYNC_{IN}1$	44	Digital input, 5V tolerant, 500mV hysteresis. Connect to channel 1's VSYNC signal.
$R_{IN}2$	22	Analog input. Red channel 2. DC couple or AC couple through 0.1µF.
$G_{IN}2$	24	Analog input. Green channel 2. DC couple or AC couple through 0.1µF.
$B_{IN}2$	28	Analog input. Blue channel 2. DC couple or AC couple through 0.1µF.
$RGB_{GND}2$	25	Analog input. Ground reference for the R, G, and B inputs of channel 2 in the DC coupled configuration. Connect to the same ground as channel 1's R, G, and B termination resistors. This signal is not used in the AC-coupled configuration, but the pin should still be tied to GND_A.
$SOG_{IN}2$	26	Analog input. Sync on Green. Connect to $G_{IN}1$ through a 0.01µF capacitor in series with a 500Ω resistor.
$HSYNC_{IN}2$	34	Digital input, 5V tolerant, 240mV hysteresis, 1.2kΩ impedance to GND_A. Connect to channel 2's HSYNC signal through a 680Ω series resistor.
$VSYNC_{IN}2$	45	Digital input, 5V tolerant, 500mV hysteresis. Connect to channel 2's VSYNC signal.
$CLOCKINV_{IN}$	41	Digital input, 5V tolerant. When high, changes the pixel sampling phase by 180 degrees. Toggle at frame rate during VSYNC to allow 2x undersampling to sample odd and even pixels on sequential frames. Tie to D_{GND} if unused.
$\overline{RESET}$	46	Digital input, 5V tolerant, active low, 70kΩ pull-up to V_D. Take low for at least 1µs and then high again to reset the X98017. This pin is not necessary for normal use and may be tied directly to the V_D supply.
$XTAL_{IN}$	39	Analog input. Connect to external 23MHz to 27MHz crystal and load capacitor (see crystal spec for recommended loading). Typical oscillation amplitude is $1.0V_{P-P}$ centered around 0.5V.
$XTAL_{OUT}$	40	Analog output. Connect to external 23MHz to 27MHz crystal and load capacitor (see crystal spec for recommended loading). Typical oscillation amplitude is $1.0V_{P-P}$ centered around 0.5V.
$XTALCLK_{OUT}$	47	3.3V digital output. Buffered crystal clock output at f_{XTAL} or $f_{XTAL}/2$. May be used as system clock for other system components.
SADDR	48	Digital input, 5V tolerant. Address = 0x4C (0x98 including R/W bit) when tied low. Address = 0x4D (0x9A including R/W bit) when tied high.
SCL	50	Digital input, 5V tolerant, 500mV hysteresis. Serial data clock for 2-wire interface.
SDA	49	Bidirectional Digital I/O, open drain, 5V tolerant. Serial data I/O for 2-wire interface.
$R_P[7:0]$	112-119	3.3V digital output. Red channel, primary pixel data. 58K pulldown when three-stated.
$R_S[7:0]$	100-107	3.3V digital output. Red channel, secondary pixel data. 58K pulldown when three-stated.
$G_P[7:0]$	90-97	3.3V digital output. Green channel, primary pixel data. 58K pulldown when three-stated.
$G_S[7:0]$	80-87	3.3V digital output. Green channel, secondary pixel data. 58K pulldown when three-stated.
$B_P[7:0]$	68-75	3.3V digital output. Blue channel, primary pixel data. 58K pulldown when three-stated.
$B_S[7:0]$	55-62	3.3V digital output. Blue channel, secondary pixel data. 58K pulldown when three-stated.
DATACLK	121	3.3V digital output. Data clock output. Equal to pixel clock rate in 24 bit mode, one half pixel clock rate in 48 bit mode.
$\overline{DATACLK}$	122	3.3V digital output. Inverse of DATACLK.

Pin Descriptions (Continued)

SYMBOL	PIN	DESCRIPTION
HS_{OUT}	125	3.3V digital output. HSYNC output aligned with pixel data. Use this output to frame the digital output data. This output is always purely horizontal sync (without any composite sync signals)
VS_{OUT}	126	3.3V digital output.Artificial VSYNC output aligned with pixel data. VSYNC is generated 8 pixel clocks after the trailing edge of HS_{OUT}. *This signal is usually not needed - use $VSYNC_{OUT}$ as VSYNC source.*
$HSYNC_{OUT}$	127	3.3V digital output. Buffered HSYNC (or SOG or CSYNC) output. This is typically used to measure HSYNC period. HS_{OUT} should be used to detect the beginning of a line. This output will pass composite sync signals and Macrovision signals if present on $HSYNC_{IN}$ or SOG_{IN}.
$VSYNC_{OUT}$	128	3.3V digital output. Buffered VSYNC output. For composite sync signals, this output will be asserted for the duration of the disruption of the normal HSYNC pattern. This is typically used to detect the beginning of a frame and measure the VSYNC period.
V_A	6, 11, 18, 20, 29, 35	Power supply for the analog section. Connect to a 3.3V supply and bypass each pin to GND_A with 0.1µF.
GND_A	3, 5, 8, 10, 15, 17, 21, 23, 27, 30, 36	Ground return for V_A and V_{BYPASS}.
V_D	54, 67, 77, 89, 99, 111, 124	Power supply for all digital I/Os. Connect to a 3.3V supply and bypass each pin to GND_D with 0.1µF.
GND_D	32, 43, 51, 53, 66, 76, 78, 88, 98, 108, 110, 120, 123	Ground return for V_D, V_{CORE}, $V_{COREADC}$, and V_{PLL}.
V_X	38	Power supply for crystal oscillator. Connect to a 3.3V supply and bypass to GND_X with 0.1µF.
GND_X	37	Ground return for V_X.
V_{BYPASS}	4, 9, 16	Bypass these pins to GND_A with 0.1µF. Do not connect these pins to each other or anything else.
$VREG_{IN}$	65	3.3V input voltage for V_{CORE} voltage regulator. Connect to a 3.3V source, and bypass to GND_D with 0.1µF.
$VREG_{OUT}$	64	Regulated output voltage for V_{PLL}, $V_{COREADC}$ and V_{CORE}; typically 1.9V. Connect only to V_{PLL}, $V_{COREADC}$ and V_{CORE} and bypass at input pins as instructed below. Do not connect to anything else - this output can only supply power to V_{PLL}, $V_{COREADC}$ and V_{CORE}.
$V_{COREADC}$	31	Internal power for the ADC's digital logic. Connect to $VREG_{OUT}$ through a 10Ω resistor and bypass to GND_D with 0.1µF.
V_{PLL}	42	Internal power for the PLL's digital logic. Connect to $VREG_{OUT}$ through a 10Ω resistor and bypass to GND_D with 0.1µF.
V_{CORE}	52, 79, 109	Internal power for core logic. Connect to $VREG_{OUT}$ and bypass each pin to GND_D with 0.1µF.
NC	1, 2, 63	Reserved. Do not connect anything to these pins.

Register Listing

ADDRESS	REGISTER (DEFAULT VALUE)	BIT(s)	FUNCTION NAME	DESCRIPTION
0x01	SYNC Status (read only)	0	HSYNC1 Active	0: HSYNC1 is Inactive 1: HSYNC1 is Active
		1	HSYNC2 Active	0: HSYNC2 is Inactive 1: HSYNC2 is Active
		2	VSYNC1 Active	0: VSYNC1 is Inactive 1: VSYNC1 is Active
		3	VSYNC2 Active	0: VSYNC2 is Inactive 1: VSYNC2 is Active
		4	SOG1 Active	0: SOG1 is Inactive 1: SOG1 is Active
		5	SOG2 Active	0: SOG2 is Inactive 1: SOG2 is Active
		6	PLL Locked	0: PLL is unlocked 1: PLL is locked to incoming HSYNC
		7	CSYNC Detected at Sync Splitter Output	0: Composite Sync signal not detected 1: Composite Sync signal is detected
0x02	SYNC Polarity (read only)	0	HSYNC1 Polarity	0: HSYNC1 is Active High 1: HSYNC1 is Active Low
		1	HSYNC2 Polarity	0: HSYNC2 is Active High 1: HSYNC2 is Active Low
		2	VSYNC1 Polarity	0: VSYNC1 is Active High 1: VSYNC1 is Active Low
		3	VSYNC2 Polarity	0: VSYNC2 is Active High 1: VSYNC2 is Active Low
		4	HSYNC1 Trilevel	0: HSYNC1 is Standard Sync 1: HSYNC1 is Trilevel Sync
		5	HSYNC2 Trilevel	0: HSYNC2 is Standard Sync 1: HSYNC2 is Trilevel Sync
		7:6	N/A	Returns 0
0x03	HSYNC Slicer (0x44)	2:0	HSYNC1 Threshold	000 = lowest (0.4V) **All values referred to** 100 = default (2.0V) **voltage at HSYNC input** 111 = highest (3.2V) **pin, 240mV hysteresis**
		3	Reserved	Set to 00
		6:4	HSYNC2 Threshold	See HSYNC1
		7	Disable Glitch Filter	0: HSYNC/VSYNC Digital Glitch Filter Enabled (default) 1: HSYNC/VSYNC Digital Glitch Filter Disabled
0x04	SOG Slicer (0x08)	3:0	SOG1 and SOG2 Threshold	0x0 = lowest (0mV) **40mV hysteresis at** 0x8 = default (160mV) **all settings** 0xF = highest (300mV) **20mV step size**
		4	SOG Filter Enable	0: SOG low pass filter disabled (default) 1: SOG low pass filter enabled, 14MHz corner
		5	SOG Hysteresis Disable	0: 40mV SOG hysteresis enabled 1: 40mV SOG hysteresis disabled (default)
		7:6	Reserved	Set to 00.

Register Listing (Continued)

ADDRESS	REGISTER (DEFAULT VALUE)	BIT(s)	FUNCTION NAME	DESCRIPTION
0x05	Input configuration (0x00)	0	Channel Select	0: VGA1 1: VGA2
		1	Input Coupling	0: AC coupled (positive input connected to clamp DAC during clamp time, negative input disconnected from outside pad and always internally tied to appropriate clamp DAC) 1: DC coupled (+ and - inputs are brought to pads and never connected to clamp DACs). Analog clamp signal is turned off in this mode.
		2	RGB/YUV	0: RGB inputs (Clamp DAC = 300mV for R, G, B, half scale analog shift for R, G, and B, base ABLC™ target code = 0x00 for R, G, and B) 1: YUV inputs (Clamp DAC = 600mV for R and B, 300mV for G, half scale analog shift for G channel only, base ABLC™ target code = 0x00 for G, = 0x80 for R and B)
		3	Sync Type	0: Separate HSYNC/VSYNC 1: Composite (from SOG or CSYNC on HSYNC)
		4	Composite Sync Source	0: SOG_{IN} 1: $HSYNC_{IN}$ Note: If Sync Type = 0, the multiplexer will pass $HSYNC_{IN}$ regardless of the state of this bit.
		5	COAST CLAMP enable	0: DC restore clamping and ABLC™ suspended during COAST 1: DC restore clamping and ABLC™ continue during COAST
		7:6	Reserved	Set to 00.
0x06	Red Gain (0x55)	7:0	Red Gain	Channel gain, where: gain (V/V) = 0.5 + [7:0]/170 0x00: gain = 0.5 V/V (1.4VP-P input = full range of ADC) 0x55: gain = 1.0 V/V (0.7VP-P input = full range of ADC) 0xFF: gain = 2.0 V/V (0.35VP-P input = full range of ADC)
0x07	Green Gain (0x55)	7:0	Green Gain	
0x08	Blue Gain (0x55)	7:0	Blue Gain	
0x09	Red Offset (0x80)	7:0	Red Offset	ABLC™ enabled: digital offset control. A 1 LSB change in this register will shift the ADC output by 1 LSB. ABLC™ disabled: analog offset control. These bits go to the upper 8 bits of the 10 bit offset DAC. A 1LSB change in this register will shift the ADC output approximately 1 LSB (Offset DAC range = 0) or 0.5LSBs (Offset DAC range = 1). 0x00 = min DAC value or -0x80 digital offset, 0x80 = mid DAC value or 0x00 digital offset, 0xFF = max DAC value or +0x7F digital offset
0x0A	Green Offset (0x80)	7:0	Green Offset	
0x0B	Blue Offset (0x80)	7:0	Blue Offset	
0x0C	Offset DAC Configuration (0x00)	0	Offset DAC Range	0: ±1/2 ADC fullscale (1 DAC LSB ~ 1 ADC LSB) 1: ±1/4 ADC fullscale (1 DAC LSB ~ 1/2 ADC LSB)
		1	Reserved	Set to 0.
		3:2	Red Offset DAC LSBs	These bits are the LSBs necessary for 10 bit manual offset DAC control. Combine with their respective MSBs in registers 0x09, 0x0A, and 0x0B to achieve 10 bit offset DAC control.
		5:4	Green Offset DAC LSBs	
		7:6	Blue Offset DAC LSBs	

Register Listing (Continued)

ADDRESS	REGISTER (DEFAULT VALUE)	BIT(s)	FUNCTION NAME	DESCRIPTION
0x0D	AFE Bandwidth (0x0E)	0	Unused	Value doesn't matter
		3:1	AFE BW	3dB point for AFE lowpass filter 000: 100MHz 111: 780MHz (default)
		7:4	Peaking	0000: Disabled (default) See **Bandwidth and Peaking Control** section for more information
0x0E	PLL Htotal MSB (0x03)	5:0	PLL Htotal MSB	14 bit HTOTAL (number of active pixels) value The minimum HTOTAL value supported is 0x200. HTOTAL to PLL is updated on LSB write only.
0x0F	PLL Htotal LSB (0x20)	7:0	PLL Htotal LSB	
0x10	PLL Sampling Phase (0x00)	5:0	PLL Sampling Phase	Used to control the phase of the ADC's sample point relative to the period of a pixel. Adjust to obtain optimum image quality. One step = 5.625° (1.56% of pixel period).
0x11	PLL Pre-coast (0x08)	7:0	Pre-coast	Number of lines the PLL will coast prior to the start of VSYNC. Applies only to internally generated COAST signals.
0x12	PLL Post-coast (0x00)	7:0	Post-coast	Number of lines the PLL will coast after the end of VSYNC. Applies only to internally generated COAST signals.
0x13	PLL Misc (0x00)	0	PLL Lock Edge HSYNC1	0: Lock on trailing edge of HSYNC1 (default) 1: Lock on leading edge of HSYNC1
		1	PLL Lock Edge HSYNC2	0: Lock on trailing edge of HSYNC2 (default) 1: Lock on leading edge of HSYNC2
		2	Reserved	Set to 0.
		3	$CLKINV_{IN}$ Pin Disable	0: $CLKINV_{IN}$ pin enabled (default) 1: $CLKINV_{IN}$ pin disabled (internally forced low)
		5:4	$CLKINV_{IN}$ Pin Function	00: CLKINV (default) 01: External CLAMP (see Note) 10: External COAST 11: External PIXCLK Note: the CLAMP pulse is used to - perform a DC restore (if enabled) - start the ABLC™ function (if enabled), and - update the data to the Offset DACs (always). When in the default internal CLAMP mode, the X98017 automatically generates the CLAMP pulse. If External CLAMP is selected, the Offset DAC values will only change on the leading edge of CLAMP. If there is no internal clamp signal, there will be up to a 100ms delay between when the PGA gain or offset DAC register is written to, and when the PGA or offset DAC is actually updated.
		6	XTALCLKOUT Frequency	0: $XTALCLK_{OUT} = f_{CRYSTAL}$ (default) 1: $XTALCLK_{OUT} = f_{CRYSTAL}/2$
		7	Disable XTALCLKOUT	0 = $XTALCLK_{OUT}$ enabled 1 = $XTALCLK_{OUT}$ is logic low
0x14	DC Restore and ABLC™ starting pixel MSB (0x00)	4:0	DC Restore and ABLC™ starting pixel (MSB)	Pixel after $HSYNC_{IN}$ trailing edge to begin DC restore and ABLC™ functions. 13 bits. Set this register to the first stable black pixel following the trailing edge of $HSYNC_{IN}$.
0x15	DC Restore and ABLC™ starting pixel LSB (0x00)	7:0	DC Restore and ABLC™ starting pixel (LSB)	
0x16	DC Restore Clamp Width (0x10)	7:0	DC Restore clamp width (pixels)	Width of DC restore clamp used in AC-coupled configurations. Has no effect on ABLC™. Minimum value is 0x02 (a setting of 0x01 or 0x00 will not generate a clamp pulse).

Register Listing (Continued)

ADDRESS	REGISTER (DEFAULT VALUE)	BIT(s)	FUNCTION NAME	DESCRIPTION
0x17	ABLC™ Configuration (0x40)	0	ABLC™ disable	0: ABLC™ enabled (default) 1: ABLC™ disabled
		1	Reserved	Set to 0.
		3:2	ABLC™ pixel width	Number of black pixels averaged every line for ABLC™ function 00: 16 pixels [default] 01: 32 pixels 10: 64 pixels 11: 128 pixels
		6:4	ABLC™ bandwidth	ABLC™ Time constant (lines) = $2^{(5+[6:4])}$ 000 = 32 lines 100 = 512 lines (default) 111 = 4096 lines
		7	Reserved	Set to 0.
0x18	Output Format (0x00)	0	Bus Width	0: 24 bits: Data output on R_P, G_P, B_P only; R_S, G_S, B_S are all driven low (default) 1: 48 bits: Data output on R_P, G_P, B_P, R_S, G_S, B_S
		1	Interleaving (48 bit mode only)	0: No interleaving: data changes on same edge of DATACLK (default) 1: Interleaved: Secondary databus data changes on opposite edge of DATACLK from primary databus
		2	Bus Swap (48 bit mode only)	0: First data byte after trailing edge of HSOUT appears on R_P, G_P, B_P (default) 1: First data byte after trailing edge of HSOUT appears on R_S, G_S, B_S (primary and secondary busses are reversed)
		3	Reserved	Set to 0.
		4	422 (24 bit mode only)	0: Data is formatted as 4:4:4 (RGB, default) 1: Data is decimated to 4:2:2 (YUV), blue channel is driven low
		5	DATACLK Polarity	0: HS_{OUT}, VS_{OUT}, and Pixel Data change on falling edge of DATACLK (default) 1: HS_{OUT}, VS_{OUT}, and Pixel Data change on rising edge of DATACLK
		6	VSOUT Polarity	0: Active High (default) 1: Active Low
		7	HSOUT Polarity	0: Active High (default) 1: Active Low
0x19	HSOUT Width (0x10)	7:0	HSOUT Width	HSOUT width, in pixels. Minimum value is 0x01 for 24 bit modes, 0x02 for 48 bit modes.
0x1A	Output Signal Disable (0x00)	0	Three-state R_P[7:0]	0 = Output byte enabled 1 = Output byte three-stated These bits override all other I/O settings Output data pins have 58kΩ pulldown resistors to GND_D.
		1	Three-state R_S[7:0]	
		2	Three-state G_P[7:0]	
		3	Three-state G_S[7:0]	
		4	Three-state B_P[7:0]	
		5	Three-state B_S[7:0]	
		6	Three-state $\overline{DATACLK}$	0 = $\overline{DATACLK}$ enabled 1 = $\overline{DATACLK}$ three-stated
		7	Three-state DATACLK	0 = DATACLK enabled 1 = DATACLK three-stated

Register Listing (Continued)

ADDRESS	REGISTER (DEFAULT VALUE)	BIT(s)	FUNCTION NAME	DESCRIPTION
0x1B	Power Control (0x00)	0	Red Power-down	0 = Red ADC operational (default) 1 = Red ADC powered down
		1	Green Power-down	0 = Green ADC operational (default) 1 = Green ADC powered down
		2	Blue Power-down	0 = Blue ADC operational (default) 1 = Blue ADC powered down
		3	PLL Power-down	0 = PLL operational (default) 1 = PLL powered down
		7:4	Reserved	Set to 0
0x1C	Reserved (0x47)	7:0	Reserved	Set to 0x49 for best performance with NTSC and PAL video
0x23	DC Restore Clamp (0x08)	3:0	Reserved	Set to 1000
		6:4	DC Restore Clamp Impedance	DC Restore clamp's ON resistance. Shared for all three channels 0: Infinite (clamp disconnected) (default) 1: 1600Ω 2: 800Ω 3: 533Ω 4: 400Ω 5: 320Ω 6: 267Ω 7: 228Ω
		7	Reserved	Set to 0

Technical Highlights

The X98017 provides all the features of traditional triple channel video AFEs, but adds several next-generation enhancements, bringing performance and ease of use to new levels.

DPLL

All video AFEs must phase lock to an HSYNC signal, supplied either directly or embedded in the video stream (Sync On Green). Historically this function has been implemented as a traditional analog PLL. At SXGA and lower resolutions, an analog PLL solution has proven adequate, if somewhat troublesome (due to the need to adjust charge pump currents, VCO ranges and other parameters to find the optimum trade-off for a wide range of pixel rates).

As display resolutions and refresh rates have increased, however, the pixel period has decreased. An XGA pixel at a 60Hz refresh rate has 15.4ns to change and settle to its new value. But at UXGA 75Hz, the pixel period is 4.9ns. Most consumer graphics cards spend most of that time slewing to the new pixel value. The pixel may settle to its final value with 1ns or less before it begins slewing to the next pixel. In many cases it never settles at all. So precision, low-jitter sampling is a fundamental requirement at these speeds, and a difficult one for an analog PLL to meet.

The X98017's DPLL has less than 250ps of jitter, peak to peak, and independent of the pixel rate. The DPLL generates 64 phase steps per pixel (vs. the industry standard 32), for fine, accurate positioning of the sampling point. The crystal-locked NCO inside the DPLL completely eliminates drift due to charge pump leakage, so there is inherently no frequency or phase change across a line. An intelligent all-digital loop filter/controller eliminates the need for the user to have to program or change anything (except for the number of pixels) to lock over a range from interlaced video (10MHz or higher) to UXGA 60Hz (170MHz).

The DPLL eliminates much of the performance limitations and complexity associated with noise-free digitization of high speed signals.

Automatic Black Level Compensation (ABLC™) and Gain Control

Traditional video AFEs have an offset DAC prior to the ADC, to both correct for offsets on the incoming video signals and add/subtract an offset for user “brightness control”. This solution is adequate, but it places significant requirements on the system's firmware, which must execute a loop that detects the black portion of the signal and then servos the offset DACs until that offset is nulled (or produces the desired ADC output code). Once this has been accomplished, the offset (both the offset in the AFE and the offset of the video card generating the signal) is subject to drift - the temperature inside a monitor or projector can easily change 50°C between power-on/offset calibration on a cold morning and the temperature reached once the monitor and the monitor's environment have reached steady state. Offset can drift significantly over 50°C, reducing

image quality and requiring that the user do a manual calibration once the monitor has warmed up.

In addition to drift, many AFEs exhibit interaction between the offset and gain controls. When the gain is changed, the magnitude of the offset is changed as well. This again increases the complexity of the firmware as it tries to optimize gain and offset settings for a given video input signal. Instead of adjusting just the offset, then the gain, both have to be adjusted interactively until the desired ADC output is reached.

The X98017 simplifies offset and gain adjustment and completely eliminates offset drift using its Automatic Black Level Compensation (ABLC™) function. ABLC™ monitors the black level and continuously adjusts the X98017's 10 bit offset DACs to null out the offset. Any offset, whether due to the video source or the X98017's analog amplifiers, is eliminated with 10 bit (1/4 of an 8 bit ADC LSB) accuracy. Any drift is compensated for well before it can have a visible effect. Manual offset adjustment control is still available - an 8 bit register allows the firmware to adjust the offset ±64 codes in exactly 1 ADC LSB increments. And gain is now completely independent of offset - adjusting the gain no longer affects the offset, so there is no longer a need to program the firmware to cope with interactive offset and gain controls.

Finally, there should be no concerns over ABLC™ itself introducing visible artifacts; it doesn't. ABLC™ operates at a very low frequency, changing the offset in 1/4 LSB increments, so it doesn't cause visible brightness fluctuations. And once ABLC™ is locked, if the offset doesn't drift, the DACs won't change. If desired, ABLC™ can be disabled, allowing the firmware to work in the traditional way, with 10 bit offset DACs under the firmware's control.

Gain and Offset Control

To simplify image optimization algorithms, the X98017 features fully-independent gain and offset adjustment. Changing the gain does not affect the DC offset, and the weight of an Offset DAC LSB does not vary depending on the gain setting.

The full-scale gain is set in the three 8-bit registers (0x06-0x08). The X98017 can accept input signals with amplitudes ranging from $0.35V_{P-P}$ to $1.4V_{P-P}$.

The offset controls shift the entire RGB input range, changing the input image brightness. Three separate registers provide independent control of the R, G, and B channels. Their nominal setting is 0x80, which forces the ADC to output code 0x00 (or 0x80 for U and V channels in YUV mode) during the back porch period when ABLC™ is enabled.

Functional Description

Inputs

The X98017 digitizes analog video inputs in both RGB and Component (YPbPr) formats, with or without embedded sync (SOG).

RGB Inputs

For RGB inputs, the black/blank levels are identical and equal to 0V. The range for each color is typically 0V to 0.7V from black to white. HSYNC and VSYNC are separate signals.

Component YUV Inputs

In addition to RGB and RGB with SOG, the X98017 has an option that is compatible with the component YPbPr and YCbCr video inputs typically generated by DVD players. While the X98017 digitizes signals in these color spaces, it does not perform color space conversion; if it digitizes an RGB signal, it outputs digital RGB, while if it digitizes a YPbPr signal, it outputs digital YPbPr. For simplicity's sake we will call these non-RGB signals YUV.

The Luminance (Y) signal is applied to the Green Channel and is processed in a manner identical to the Green input with SOG described previously. The color difference signals U and V are bipolar and swing both above and below the black level. When the YUV mode is enabled, the black level output for the color difference channels shifts to a mid scale value of 0x80. Setting configuration register 0x05[2] = 1 enables the YUV signal processing mode of operation.

TABLE 1. YUV MAPPING (4:4:4)

INPUT SIGNAL	X98017 INPUT CHANNEL	X98017 OUTPUT ASSIGNMENT	OUTPUT SIGNAL
Y	Green	Green	$Y_0Y_1Y_2Y_3$
U	Blue	Blue	$U_0U_1U_2U_3$
V	Red	Red	$V_0V_1V_2V_3$

The X98017 can optionally decimate the incoming data to provide a 4:2:2 output stream (configuration register 0x18[4] = 1) as shown in Table 2.

TABLE 2. YUV MAPPING (4:2:2)

INPUT SIGNAL	X98017 INPUT CHANNEL	X98017 OUTPUT ASSIGNMENT	OUTPUT SIGNAL
Y	Green	Green	$Y_0Y_1Y_2Y_3$
U	Blue	Blue	driven low
V	Red	Red	$U_0V_1U_2V_3$

Input Coupling

Inputs can be either AC-coupled (default) or DC-coupled (see register 0x05[1]). AC coupling is usually preferred since it allows video signals with substantial DC offsets to be accurately digitized. The X98017 provides a complete internal DC-restore function, including the DC restore clamp (See Figure 7) and programmable clamp timing (registers 0x14, 0x15, 0x16, and 0x23).

When AC-coupled, the DC restore clamp is applied every line, a programmable number of pixels after the trailing edge of HSYNC. If register 0x05[5] = 0 (the default), the clamp will not be applied while the DPLL is coasting, preventing any clamp voltage errors from composite sync edges, equalization pulses, or Macrovision signals.

After the trailing edge of HSYNC, the DC restore clamp is turned on after the number of pixels specified in the DC Restore and ABLC™ Starting Pixel registers (0x14 and 0x15) has been reached. The clamp is applied for the number of pixels specified by the DC Restore Clamp Width Register (0x16). The clamp can be applied to the back porch of the video, or to the front porch (by increasing the DC Restore and ABLC™ Starting Pixel registers so all the active video pixels are skipped).

If DC-coupled operation is desired, the input to the ADC will be the difference between the input signal ($R_{IN}1$, for example) and that channel's ground reference ($RGB_{GND}1$ in that example).

SOG

For component YUV signals, the sync signal is embedded on the Y channel's video, which is connected to the green input, hence the name SOG (Sync on Green). The horizontal sync information is encoded onto the video input by adding the sync tip during the blanking interval. The sync tip level is typically 0.3V below the video black level.

To minimize the loading on the green channel, the SOG input for each of the green channels should be AC-coupled to the X98017 through a series combination of a 10nF capacitor and a 500Ω resistor. Inside the X98017, a window comparator compares the SOG signal with an internal 4 bit programmable threshold level reference ranging from 0mV to 300mV below the minimum sync level. The SOG threshold level, hysteresis, and low-pass filter is programmed via register 0x04. If the Sync-On-Green function is not needed, the SOG_{IN} pin(s) may be left unconnected.

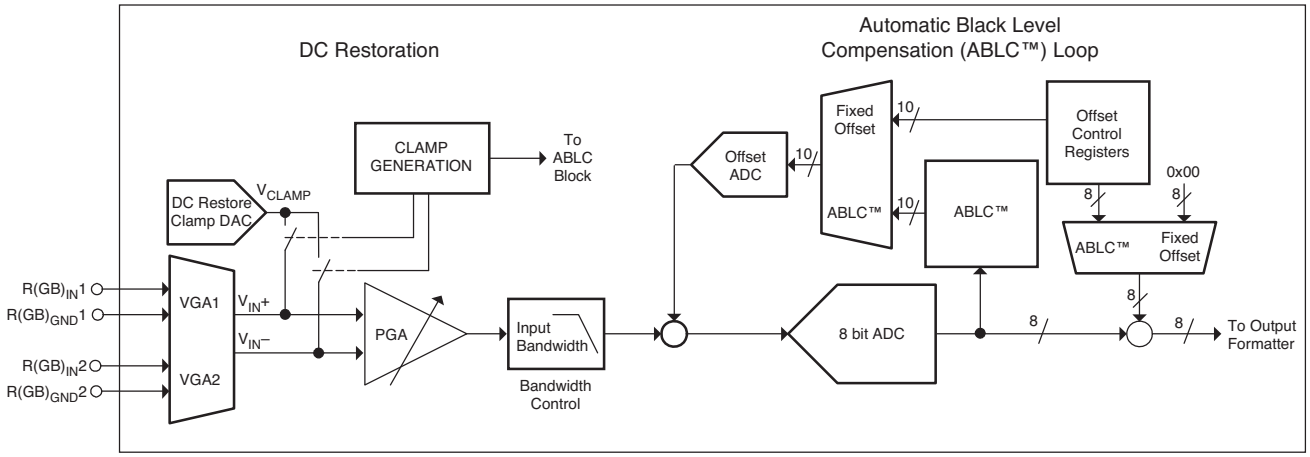

FIGURE 7. VIDEO FLOW (INCLUDING ABLC™)

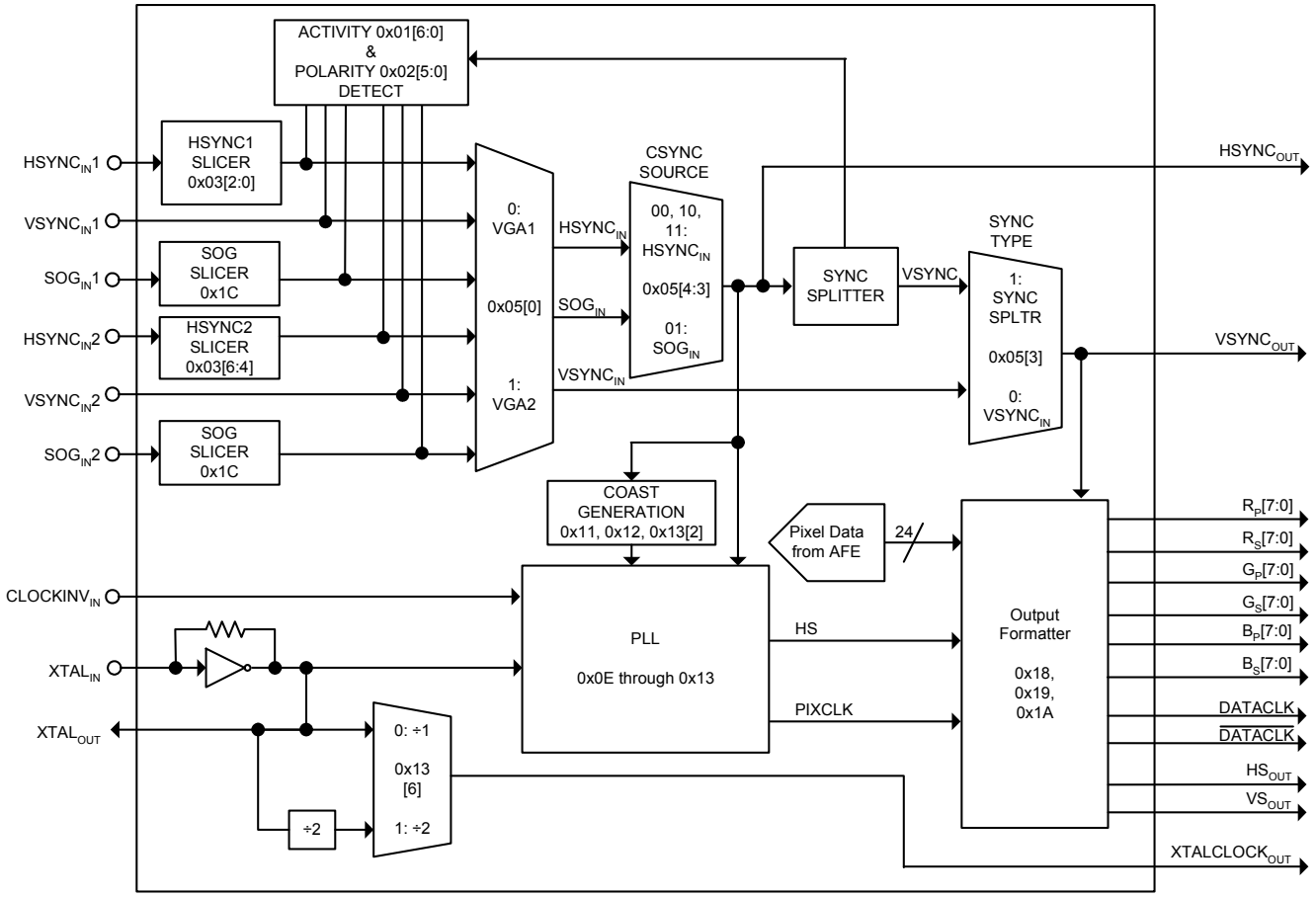

FIGURE 8. SYNC FLOW

SYNC Processing

The X98017 can process sync signals from 3 different sources: discrete HSYNC and VSYNC, composite sync on the HSYNC input, or composite sync from a Sync-On-Green (SOG) signal embedded on the Green video input. The X98017 has SYNC activity detect functions to help the firmware determine which sync source is available.

PGA

The X98017's Programmable Gain Amplifier (PGA) has a nominal gain range from 0.5V/V (-6dB) to 2.0V/V (+6dB). The transfer function is:

$$\text{Gain}\left(\frac{V}{V}\right) = 0.5 + \frac{\text{GainCode}}{170}$$

where GainCode is the value in the Gain register for that particular color. Note that for a gain of 1 V/V for GainCode should be 85 (0x55). This is a different center value than the 128 (0x80) value used by some other AFEs, so the firmware should take this into account when adjusting gains.

The PGAs are updated by the internal clamp signal once per line. In normal operation this means that there is a maximum delay of one HSYNC period between a write to a Gain register for a particular color and the corresponding change in that channel's actual PGA gain. If there is no regular HSYNC/SOG source, or if the external clamp option is enabled (register 0x13[5:4]) but there is no external clamp signal being generated, it may take up to 100ms for a write to the Gain register to update the PGA. This is not an issue in normal operation with RGB and YUV signals.

Bandwidth and Peaking Control

Register 0x0D[3:1] controls a low pass filter allowing the input bandwidth to be adjusted with three bit resolution between its default value (0x0E = 780MHz) and its minimum bandwidth (0x00, for 100MHz). Typically the higher the resolution, the higher the desired input bandwidth. To minimize noise, video signals should be digitized with the minimum bandwidth setting that passes sharp edges.

Table 3 shows the corner frequency for different register settings.

TABLE 3. BANDWIDTH CONTROL

0x0D[3:0] VALUE (LSB = “x” = “don’t care”)	AFE BANDWIDTH
000x	100MHz
001x	130MHz
010x	150MHz
011x	180MHz
100x	230MHz
101x	320MHz
110x	480MHz
111x	780MHz

Register 0x0D[7:4] controls a programmable zero, allowing high frequencies to be boosted, restoring some of the harmonics lost due to excessive EMI filtering, cable losses, etc. This control has a very large range, and can introduce high frequency noise into the image, so it should be used judiciously, or as an advanced user adjustment.

Table 4 shows the corner frequency of the zero for different peaking register settings.

TABLE 4. PEAKING CORNER FREQUENCIES

0X0D[7:4] VALUE	ZERO CORNER FREQUENCY
0x0	Peaking disabled
0x1	800MHz
0x2	400MHz
0x3	265MHz
0x4	200MHz
0x5	160MHz
0x6	135MHz
0x7	115MHz
0x8	100MHz
0x9	90MHz
0xA	80MHz
0xB	70MHz
0xC	65MHz
0xD	60MHz
0xE	55MHz
0xF	50MHz

Offset DAC

The X98017 features a 10 bit Digital-to-Analog Converter (DAC) to provide extremely fine control over the full channel offset. The DAC is placed after the PGA to eliminate interaction between the PGA (controlling “contrast”) and the Offset DAC (controlling “brightness”).

In normal operation, the Offset DAC is controlled by the ABLC™ circuit, ensuring that the offset is always reduced to sub-LSB levels (See the following ABLC™ section for more information). When ABLC™ is enabled, the Offset registers (0x09, 0x0A, 0x0B) control a digital offset added to or subtracted from the output of the ADC. This mode provides the best image quality and eliminates the need for any offset calibration.

If desired, ABLC™ can be disabled (0x17[0]=1) and the Offset DAC programmed manually, with the 8 most significant bits in registers 0x09, 0x0A, 0x0B, and the 2 least significant bits in register 0x0C[7:2].

The default Offset DAC range is ±127 ADC LSBs. Setting 0x0C[0]=1 reduces the swing of the Offset DAC by 50%, making 1 Offset DAC LSB the weight of 1/8th of an ADC LSB. This provides the finest offset control and applies to both ABLC™ and manual modes.

Automatic Black Level Compensation (ABLC™)

ABLC is a function that continuously removes all offset errors from the incoming video signal by monitoring the offset at the output of the ADC and servoing the 10 bit analog DAC to force those errors to zero. When ABLC is enabled, the user offset control is a digital adder, with 8 bit resolution (See Table 5).

When the ABLC function is enabled (0x17[0]=0), the ABLC function is executed every line after the trailing edge of HSYNC. If register 0x05[5] = 0 (the default), the ABLC function will not be triggered while the DPLL is coasting, preventing any composite sync edges, equalization pulses, or Macrovision signals from corrupting the black data and potentially adding a small error in the ABLC accumulator.

After the trailing edge of HSYNC, the start of ABLC is delayed by the number of pixels specified in registers 0x14 and 0x15. After that delay, the number of pixels specified by register 0x17[3:2] are averaged together and added to the ABLC’s accumulator. The accumulator stores the average black levels for the number of lines specified by register 0x17[6:4], which is then used to generate a 10 bit DAC value.

The default values provide excellent results with offset stability and absolute accuracy better than 1 ADC LSB for most input signals. Increasing the ABLC pixel width or the ABLC bandwidth settings decreases the ABLC’s absolute DC error further.

ADC

The X98017 features 3 fully differential, 170MSPS 8 bit ADCs.

TABLE 5. OFFSET DAC RANGE AND OFFSET DAC ADJUSTMENT

OFFSET DAC RANGE 0x0C[0]	10 BIT OFFSET DAC RESOLUTION	ABLC™ 0x17[0]	USER OFFSET CONTROL RESOLUTION USING REGISTERS 0x09 - 0x0B ONLY (8 BIT OFFSET CONTROL)	USER OFFSET CONTROL RESOLUTION USING REGISTERS 0x09 - 0x0B AND 0x0C[7:2] (10 BIT OFFSET CONTROL)
0	0.25 ADC LSBs (0.68mV)	0 (ABLC on)	1 ADC LSB (digital offset control)	N/A
1	0.125 ADC LSBs (0.34mV)	0 (ABLC on)	1 ADC LSB (digital offset control)	N/A
0	0.25 ADC LSBs (0.68mV)	1 (ABLC off)	1.0 ADC LSB (analog offset control)	0.25 ADC LSB (analog offset control)
1	0.125 ADC LSBs (0.34mV)	1 (ABLC off)	0.5 ADC LSB (analog offset control)	0.125 ADC LSB (analog offset control)

Clock Generation

A Digital Phase Lock Loop (DPLL) is employed to generate the pixel clock frequency. The HSYNC input and the external XTAL provide a reference frequency to the PLL. The PLL then generates the pixel clock frequency that is equal to the incoming HSYNC frequency times the HTOTAL value programmed into registers 0x0E and 0x0F.

The stability of the clock is very important and correlates directly with the quality of the image. During each pixel time transition, there is a small window where the signal is slewing from the old pixel amplitude and settling to the new pixel value. At higher frequencies, the pixel time transitions at a faster rate, which makes the stable pixel time even smaller. Any jitter in the pixel clock reduces the effective stable pixel time and thus the sample window in which pixel sampling can be made accurately.

Sampling Phase

The X98017 provides 64 low-jitter phase choices per pixel period, allowing the firmware to precisely select the optimum sampling point. The sampling phase register is 0x10.

HSYNC Slicer

To further minimize jitter, the HSYNC inputs are treated as analog signals, and brought into a precision slicer block with thresholds programmable in 400mV steps with 240mV of hysteresis, and a subsequent digital glitch filter that ignores any HSYNC transitions within 100ns of the initial transition. This processing greatly increases the AFE's rejection of ringing and reflections on the HSYNC line and allows the AFE to perform well even with pathological HSYNC signals.

Voltages given above and in the HSYNC Slicer register description are with respect to a 3.3V sync signal at the $HSYNC_{IN}$ input pin. To achieve 5V compatibility, a 680Ω series resistor should be placed between the HSYNC source and the $HSYNC_{IN}$ input pin. Relative to a 5V input, the hysteresis will be 240mV*5V/3.3V = 360mV, and the slicer step size will be 400mV*5V/3.3V = 600mV per step.

The best HSYNC slicer threshold is generally 800mV (001b) when locking on the rising edge of an HSYNC signal, or 2.4V (110b) when locking on the falling edge.

SOG Slicer

The SOG input has programmable threshold, 40mV of hysteresis, and an optional low pass filter than can be used to remove high frequency video spikes (generated by overzealous video peaking in a DVD player, for example) that can cause false SOG triggers. The SOG threshold sets the comparator threshold relative to the sync tip (the bottom of the SOG pulse). A good default SOG slicer threshold setting is 0x16 (hysteresis and low pass filter enabled, threshold lowered slightly to accommodate weak sync tips).

SYNC Status and Polarity Detection

The SYNC Status register (0x01) and the SYNC Polarity register (0x02) continuously monitor all 6 sync inputs ($VSYNC_{IN}$, $HSYNC_{IN}$, and SOG_{IN} for each of 2 channels) and report their status. However, accurate sync activity detection is always a challenge. Noise and repetitive video patterns on the Green channel may look like SOG activity when there actually is no SOG signal, while non-standard SOG signals and trilevel sync signals may have amplitudes below the default SOG slicer levels and not be easily detected. As a consequence, not all of the activity detect bits in the X980xx are correct under all conditions.

Table 6 shows how to use the SYNC Status register (0x01) to identify the presence of and type of a sync source. The firmware should go through the table in the order shown, stopping at the first entry that matches the activity indicators in the SYNC Status register.

Final validation of composite sync sources (SOG or Composite sync on HSYNC) should be done by setting the Input Configuration register (0x05) to the composite sync source determined by this table, and confirming that the CSYNC detect bit is set.

The accuracy of the Trilevel Sync detect bit can be increased by multiple reads of the Trilevel Sync detect bit. See the **Trilevel Sync Detect** section for more details.

For best SOG operation, the SOG low pass filter (register 0x04[4]) should always be enabled to reject the high frequency peaking often seen on video signals.

TABLE 6. SYNC SOURCE DETECTION TABLE

HSYNC DETECT	VSYNC DETECT	SOG DETECT	TRILEVEL DETECT	RESULT
1	1	X	X	Sync is on HSYNC and VSYNC
1	0	X	X	Sync is composite sync on HSYNC. Set Input configuration register to CSYNC on HSYNC and confirm that CSYNC detect bit is set.
0	0	1	0	Sync is composite sync on SOG. It is possible that trilevel sync is present but amplitude is too low to set trilevel detect bit. Use video mode table to determine if this video mode is likely to have trilevel sync, and set clamp start, width values appropriately if it is.
0	0	1	1	Sync is composite sync on SOG. Sync is likely to be trilevel.
0	0	0	X	No valid sync sources on any input.

HSYNC and VSYNC Activity Detect

Activity on these bits always indicates valid sync pulses, so they should have the highest priority and be used even if the SOG activity bit is also set.

SOG Activity Detect

The SOG activity detect bit monitors the output of the SOG slicer, looking for 64 consecutive pulses with the same period and duty cycle. If there is no signal on the Green (or Y) channel, the SOG slicer will clamp the video to a DC level and will reject any sporadic noise. There should be no false positive SOG detects if there is no video on Green (or Y).

If there is video on Green (or Y) with no valid SOG signal, the SOG activity detect bit may sometimes report false positives (it will detect SOG when no SOG is actually present). This is due to the presence of video with a repetitive pattern that creates a waveform similar to SOG. For example, the desktop of a PC operating system is black during the front porch, horizontal sync, and back porch, then increases to a larger value for the visible portion of the screen. This creates a repetitive video waveform very similar to SOG that may falsely trigger the SOG Activity detect bit. However, in these cases where there is active video without SOG, the SYNC information will be provided either as separate H and V sync on $HSYNC_{IN}$ and $VSYNC_{IN}$, or composite sync on $HSYNC_{IN}$. $HSYNC_{IN}$ and $VSYNC_{IN}$ should therefore be used to qualify SOG. The SOG Active bit should only be considered valid if HSYNC Activity Detect = 0. Note: Some pattern generators can output HSYNC and SOG simultaneously, in which case both the HSYNC and the SOG activity bits will be set, and valid. Even in this case, however, the monitor should still choose HSYNC over SOG.

TriLevel Sync Detect

Unlike SOG detect, the TriLevel Sync detect function does not check for 64 consecutive trilevel pulses in a row, and is therefore less robust than the SOG detect function. It will report false positives for SOG-less video for the same reasons the SOG activity detect does, and should therefore be qualified with both HSYNC and SOG. TriLevel Sync Detect should only be considered valid if HSYNC Activity Detect = 0 and SOG Activity Detect = 1.

If there is a SOG signal, the TriLevel Detect bit will operate correctly for standard trilevel sync levels (600mVp-p). In some real-world situations, the peak-to-peak sync amplitude may be significantly smaller, sometimes 300mVp-p or less. In these cases the sync slicer will continue to operate correctly, but the TriLevel Detect bit may not be set. Trilevel detection accuracy can be enhanced by polling the trilevel bit multiple times. If HSYNC is inactive, SOG is present, and the TriLevel Sync Detect bit is read as a 1, there is a high likelihood there is trilevel sync.

CSYNC Present

If a composite sync source (either CSYNC on HSYNC or SOG) is selected through bits 3 and 4 of register 0x05, the CSYNC Present bit in register 0x01 should be set. CSYNC Present detects the presence of a low frequency, repetitive signal inside HSYNC, which indicates a VSYNC signal. The CSYNC Present bit should be used to confirm that the signal being received is a reliable composite sync source.

SYNC Output Signals

The X98017 has 2 pairs of HSYNC and VSYNC output signals, $HSYNC_{OUT}$ and $VSYNC_{OUT}$, and HS_{OUT} and VS_{OUT}.

$HSYNC_{OUT}$ and $VSYNC_{OUT}$ are buffered versions of the incoming sync signals; no synchronization is done. These signals should be used for mode detection.

HS_{OUT} and VS_{OUT} are generated by the X98017's logic and are synchronized to the output DATACLK and the digital pixel data on the output databus. HS_{OUT} is used to signal the start of a new line of digital data. VS_{OUT} is not needed in most applications.

Both $HSYNC_{OUT}$ and $VSYNC_{OUT}$ (including the sync separator function) remain active in power-down mode. This allows them to be used in conjunction with the Sync Status registers to detect valid video without powering up the X98017.

$HSYNC_{OUT}$

$HSYNC_{OUT}$ is an unmodified, buffered version of the incoming $HSYNC_{IN}$ or SOG_{IN} signal of the selected channel, with the incoming signal's period, polarity, and width to aid in mode detection. $HSYNC_{OUT}$ will be the same format as the incoming sync signal: either horizontal or composite sync. If a SOG input

is selected, $HSYNC_{OUT}$ will output the entire SOG signal, including the VSYNC portion, pre-/post-equalization pulses if present, and Macrovision pulses if present. $HSYNC_{OUT}$ remains active when the X98017 is in power-down mode. $HSYNC_{OUT}$ is generally used for mode detection.

$VSYNC_{OUT}$

$VSYNC_{OUT}$ is an unmodified, buffered version of the incoming $VSYNC_{IN}$ signal of the selected channel, with the original VSYNC period, polarity, and width to aid in mode detection. If a SOG input is selected, this signal will output the VSYNC signal extracted by the X98017's sync slicer. Extracted VSYNC will be the width of the embedded VSYNC pulse plus pre- and post-equalization pulses (if present). Macrovision pulses from an NTSC DVD source will lengthen the width of the VSYNC pulse. Macrovision pulses from other sources (PAL DVD or videotape) may appear as a second VSYNC pulse encompassing the width of the Macrovision. See the Macrovision section for more information. $VSYNC_{OUT}$ (including the sync separator function) remains active in power-down mode. $VSYNC_{OUT}$ is generally used for mode detection, start of field detection, and even/odd field detection.

HS_{OUT}

HS_{OUT} is generated by the X98017's control logic and is synchronized to the output DATACLK and the digital pixel data on the output databus. Its trailing edge is aligned with pixel 0. Its width, in units of pixels, is determined by register 0x19, and its polarity is determined by register 0x18[7]. As the width is increased, the trailing edge stays aligned with pixel 0, while the leading edge is moved backwards in time relative to pixel 0. HS_{OUT} is used by the scaler to signal the start of a new line of pixels.

The HSOUT Width register (0x19) controls the width of the HS_{OUT} pulse. The pulse width is nominally 1 pixel clock period times the value in this register. In the 48 bit output mode (register 0x18[0] = 1), or the YUV input mode (register 0x05[2] = 1), the HS_{OUT} width is incremented in 2 pixel clock (1 DATACLK) increments (see Table 7).

TABLE 7. HS_{OUT} WIDTH

REGISTER 0x19 VALUE	HS_{OUT} WIDTH (PIXEL CLOCKS)		
	24 BIT MODE, RGB	24 BIT MODE, YUV	ALL 48 BIT MODES
0	0	1	0
1	1	1	0
2	2	3	2
3	3	3	2
4	4	5	4
5	5	5	4
6	6	7	6
7	7	7	6

VS_{OUT}

VS_{OUT} is generated by the X98017's control logic and is synchronized to the output DATACLK and the digital pixel data on the output databus. Its leading and trailing edges are aligned with pixel 7 (8 pixels after HSYNC trailing edge). Its width, in units of lines, is equal to the width of the incoming VSYNC (see the $VSYNC_{OUT}$ description). Its polarity is determined by register 0x18[6]. *This output is not needed in most applications.*

Macrovision

The X98017 will synchronize to and digitize Macrovision-encoded YUV video if the source is an NTSC DVD. Macrovision from PAL DVD, or from all video tape sources, is incompatible with the sync slicer, requiring that the Macrovision pulses either be stripped from the video prior to the SOG_{IN} input, or an external COAST signal be generated and applied to the CLKINV pin that will coast the X98017's PLL during the VSYNC and Macrovision period.

Standby Mode

The X98017 can be placed into a low power standby mode by writing a 0x0F to register 0x1B, powering down the triple ADCs, the DPLL, and most of the internal clocks.

To allow input monitoring and mode detection during power-down, the following blocks remain active:

- Serial interface (including the crystal oscillator) to enable register read/write activity
- Activity and polarity detect functions (registers 0x01 and 0x02)
- The $HSYNC_{OUT}$ and $VSYNC_{OUT}$ pins (for mode detection)

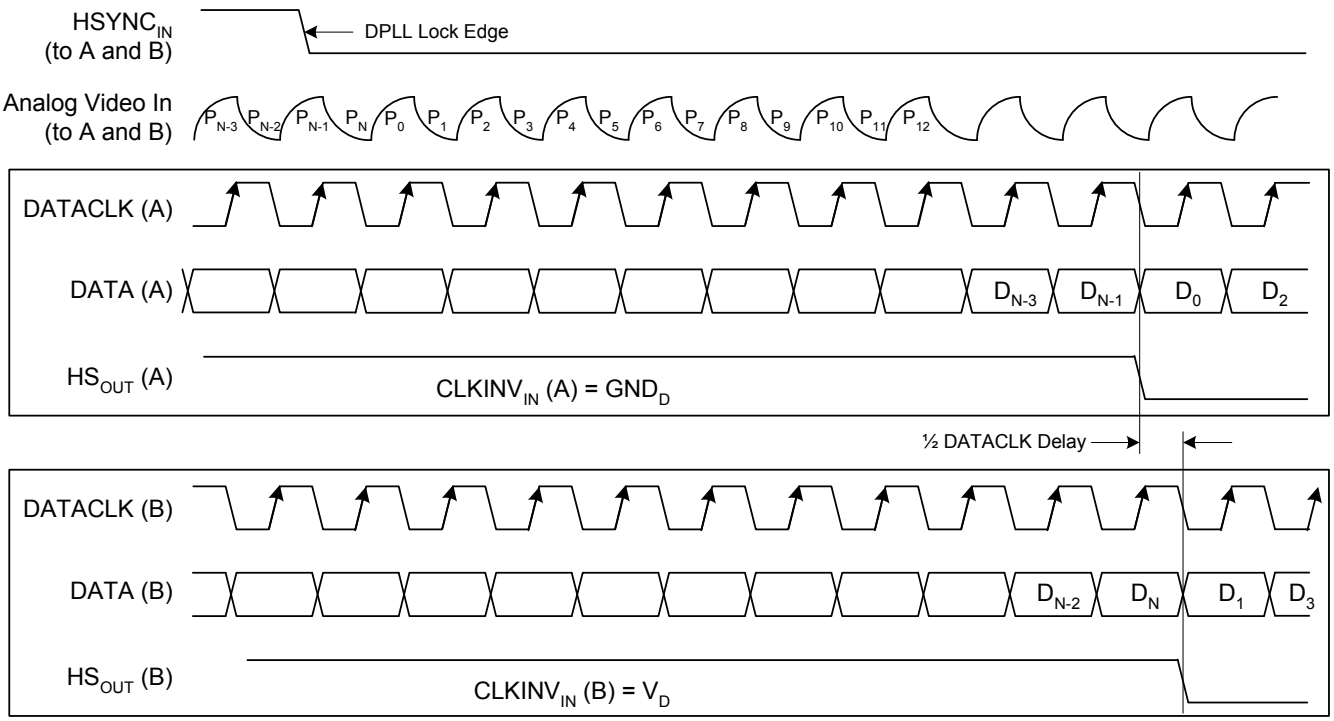

FIGURE 9. ALTERNATE PIXEL SAMPLING (24 BIT MODE)

Crystal Oscillator

An external 23MHz to 27MHz crystal supplies the low-jitter reference clock to the DPLL. The absolute frequency of this crystal within this range is unimportant, as is the crystal's temperature coefficient, allowing use of less expensive, lower-grade crystals.

EMI Considerations

There are two possible sources of EMI on the X98017:

- **Crystal oscillator.** The EMI from the crystal oscillator is negligible. This is due to an amplitude-regulated, low voltage sine wave oscillator circuit, instead of the typical high-gain square wave inverter-type oscillator, so there are no harmonics. *The crystal oscillator is not a significant source of EMI.*
- **Digital output switching.** This is the largest potential source of EMI. However, the EMI is determined by the PCB+ layout and the loading on the databus. The way to control this is to put series resistors on the output of all the digital pins. These resistor values should be adjusted to optimize signal quality on the bus. Intersil recommends starting with 22Ω and adjusting as necessary for the particular PCB layout and device loading.

Recommendations for minimizing EMI are:

- Minimize the databus trace length
- Minimize the databus capacitive loading.

If EMI is a problem in the final design, increase the value of the digital output series resistors to reduce slew rates on the bus. This can only be done as long as the scaler's setup and hold timing requirements continue to be met.

Alternate Pixel Sampling

Two X98017s (AFE_A and AFE_B) may be used simultaneously to achieve effective sample rates greater than 170MHz. Each AFE is programmed with an HTOTAL value equal to one-half of the total number of pixels in a line. The $CLOCKINV_{IN}$ pin for AFE_A is tied to ground, AFE_B is tied to V_D. Both AFEs are otherwise programmed identically, though some minor phase adjustment may be needed to compensate for any propagation delay mismatch between the two AFEs.

The $CLOCKINV_{IN}$ setting shifts the phase of AFE_B by 180 degrees from AFE_A. AFE_A now samples the even pixels on the rising edge of its DATACLK, while AFE_B samples the odd pixels on the rising edge of its clock. With each AFE in 24 bit mode, two 24 bit data streams are generated (Figure 9).

With both AFEs configured for 48 bit mode, a 96 bit datastream is generated (Figure 10).

In both cases, AFE_A and AFE_B are on different DATACLK domains. In 24 bit mode, the data from each AFE must be latched on the rising edge of that AFE's DATACLK. In 48 bit mode, the frequencies are low enough that the rising edge of AFE B can be used to capture both AFE_B and AFE_A data.

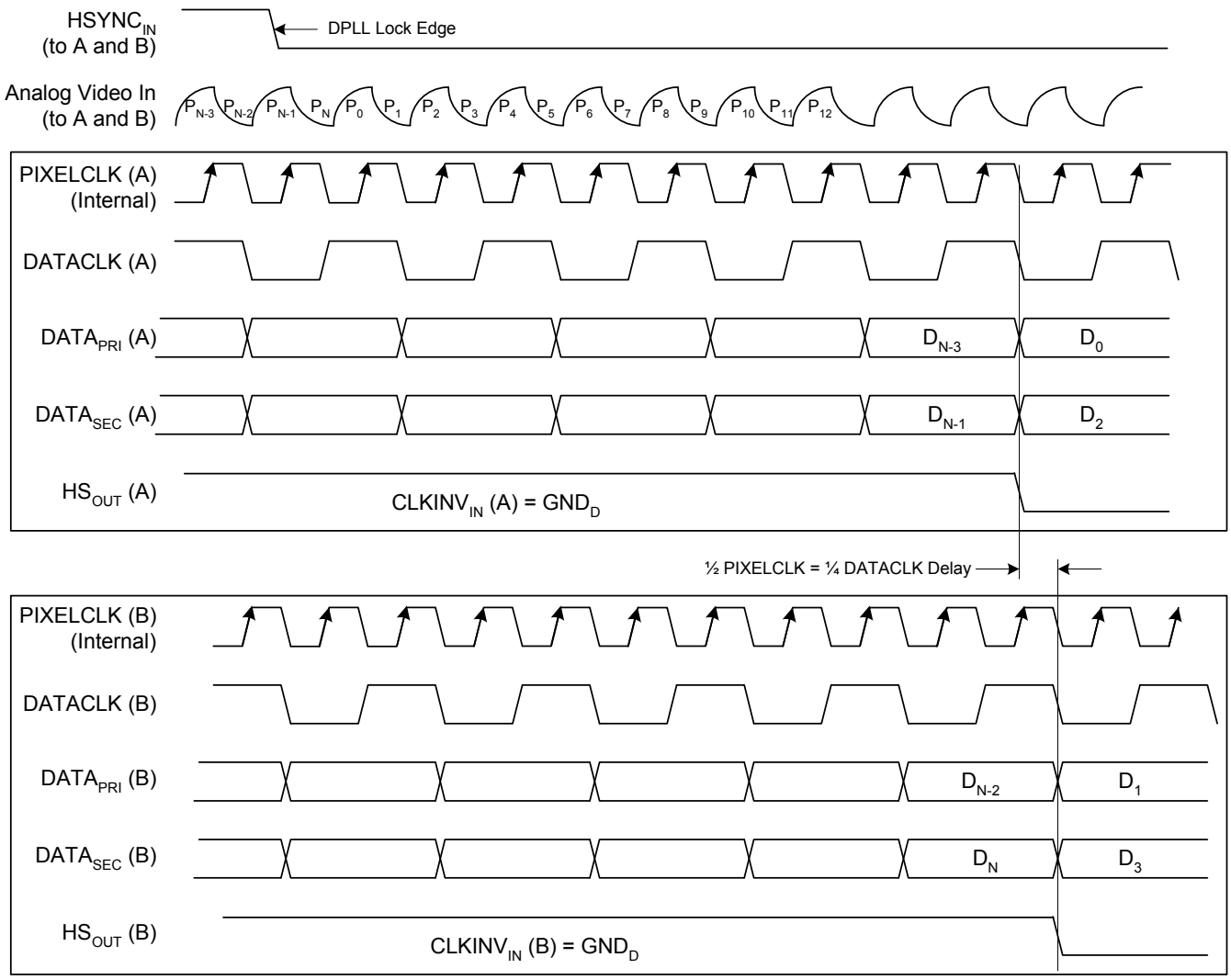

FIGURE 10. ALTERNATE PIXEL SAMPLING (48 BIT MODE)

Initialization

The X98017 initializes with default register settings for an AC-coupled, RGB input on the VGA1 channel, with a 24 bit output.

The following registers should be written to fully enable the chip:

- Register 0x1C should be set to 0x49 to improve DPLL performance in video modes
- Register 0x23 should be set to 0x78 to enable the DC Restore function

Reset

The X98017 has a Power-On Reset (POR) function that resets the chip to its default state when power is initially applied, including resetting all the registers to their default settings as described in the Register Listing. The external $\overline{\text{RESET}}$ pin duplicates the reset function of the POR without having to cycle the power supplies. The $\overline{\text{RESET}}$ pin does not need to be used in normal operation and can be tied high.

Rare CSYNC Considerations

Intersil has discovered one anomaly in its sync separator function. If the CSYNC signal shown in Figure 11 is present on the HSYNC input, and the sync source is set to CSYNC on HSYNC, HS_{OUT} may sporadically lock to the wrong edge of $HSYNC_{IN}$. This will cause the HS_{OUT} to have the wrong position relative to pixel 0, resulting in the image shifting left or right by the width of the $HSYNC_{IN}$ signal for about 1 second before it corrects itself.

This only happens with the exact waveshape shown in Figure 11. If the polarity of the sync signal is inverted from that shown in Figure 11, the problem will not occur. If there are any serrations during the VSYNC period, the problem will not occur. The problem also will not occur if the sync signal is on the SOG input.

This is a rarely used composite sync format; in most applications it will never be encountered. However if this

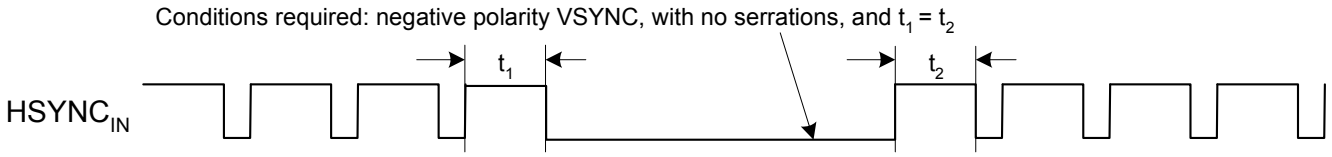

FIGURE 11. CSYNC ON HSYNC THAT MAY CAUSE SPORADIC IMAGE SHIFTS

CSYNC waveform must be supported, there is a simple applications solution using an XOR gate.

The output of the XOR gate is connected to the $HSYNC_{IN}$ input of the X98017. One of the XOR inputs is connected to the HSYNC/CSYNC source, and the other input is connected to a general purpose I/O. For all sync sources except the CSYNC shown in Figure 11, the input connected to the GPIO should be driven low.

If the system microcontroller detects a mode corresponding to the sync type and polarity shown in Figure 11, it should drive the GPIO pin high. This will invert the CSYNC signal seen by the X98017 and prevent any spontaneous image shifting.

X98017 Serial Communication

Overview

The X98017 uses a 2 wire serial bus for communication with its host. SCL is the Serial Clock line, driven by the host, and SDA is the Serial Data line, which can be driven by all devices on the bus. SDA is open drain to allow multiple devices to share the same bus simultaneously.

Communication is accomplished in three steps:

1. The Host selects the X98017 it wishes to communicate with.
2. The Host writes the initial X98017 Configuration Register address it wishes to write to or read from.
3. The Host writes to or reads from the X98017's Configuration Register. The X98017's internal address pointer auto increments, so to read registers 0x00 through 0x1B, for example, one would write 0x00 in step 2, then repeat step 3 28 times, with each read returning the next register value.

The X98017 has a 7 bit address on the serial bus. The upper 6 bits are permanently set to 100110, with the lower bit determined by the state of pin 48. This allows 2 X98017s to be independently controlled while sharing the same bus.

The bus is nominally inactive, with SDA and SCL high. Communication begins when the host issues a START command by taking SDA low while SCL is high (Figure 12). The X98017 continuously monitors the SDA and SCL lines for the start condition and will not respond to any command until this condition has been met. The host then transmits the 7 bit serial address plus a R/$\overline{W}$ bit, indicating if the next transaction will be a Read (R/$\overline{W}$ = 1) or a Write (R/$\overline{W}$ = 0). If the address transmitted matches that of any device on the bus, that device must respond with an ACKNOWLEDGE (Figure 13).

Once the serial address has been transmitted and acknowledged, one or more bytes of information can be written to or read from the slave. Communication with the selected device in the selected direction (read or write) is ended by a STOP command, where SDA rises while SCL is high (Figure 12), or a second START command, which is commonly used to reverse data direction without relinquishing the bus.

Data on the serial bus must be valid for the entire time SCL is high (Figure 14). To achieve this, data being written to the X98017 is latched on a delayed version of the rising edge of SCL. SCL is delayed and deglitched inside the X98017 for 3 crystal clock periods (120ns for a 25MHz crystal) to eliminate spurious clock pulses that could disrupt serial communication.

When the contents of the X98017 are being read, the SDA line is updated after the falling edge of SCL, delayed and deglitched in the same manner.

Configuration Register Write

Figure 15 shows two views of the steps necessary to write one or more words to the Configuration Register.

Configuration Register Read

Figure 16 shows two views of the steps necessary to read one or more words from the Configuration Register.

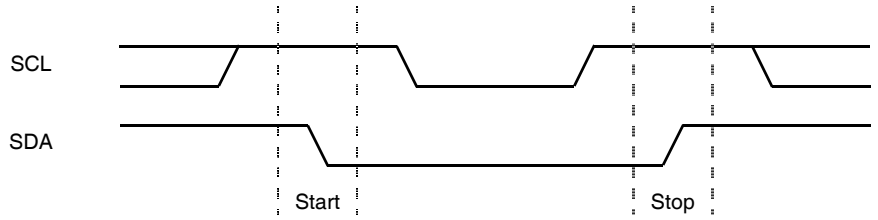

FIGURE 12. VALID START AND STOP CONDITIONS

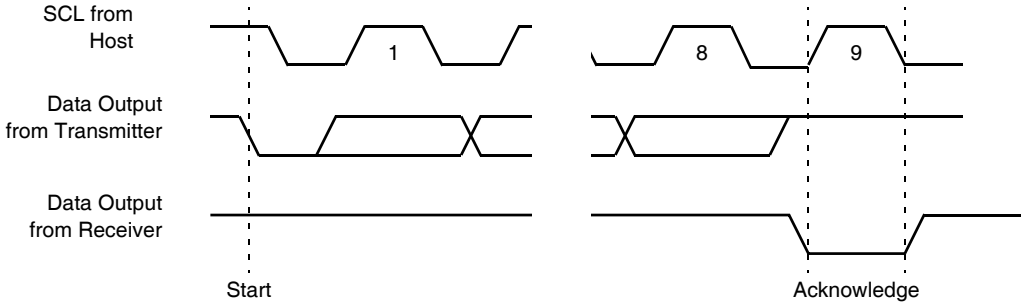

FIGURE 13. ACKNOWLEDGE RESPONSE FROM RECEIVER

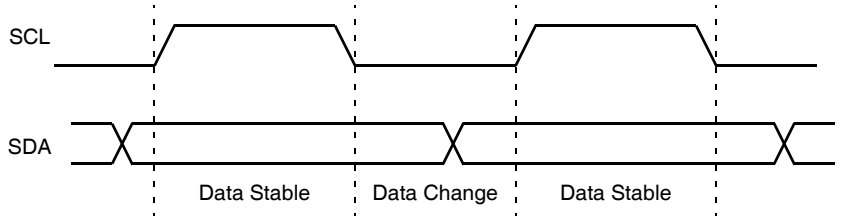

FIGURE 14. VALID DATA CHANGES ON THE SDA BUS

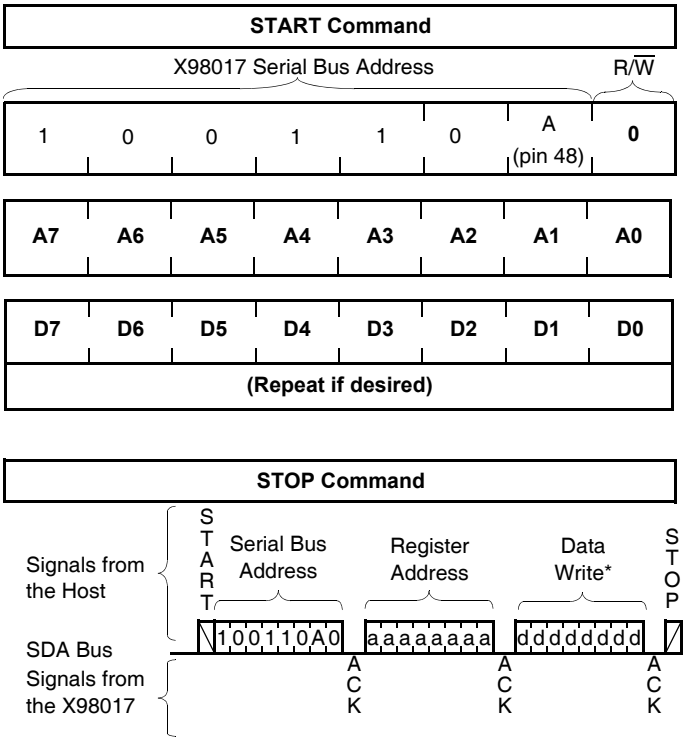

Signals the beginning of serial I/O

X98017 Serial Bus Address Write

This is the 7 bit address of the X98017 on the 2 wire bus. The address is 0x4C if pin 48 is low, 0x4D if pin 48 is high. Shift this value to left when adding the R/W bit

X98017 Register Address Write

This is the address of the X98017's configuration register that the following byte will be written to.

X98017 Register Data Write(s)

This is the data to be written to the X98017's configuration register.

Note: The X98017's Configuration Register's address pointer auto increments after each data write: repeat this step to write multiple sequential bytes of data to the Configuration Register.

Signals the ending of serial I/O

* The data write step may be repeated to write to the X98017's Configuration Register sequentially, beginning at the Register Address written in the previous step.

FIGURE 15. CONFIGURATION REGISTER WRITE

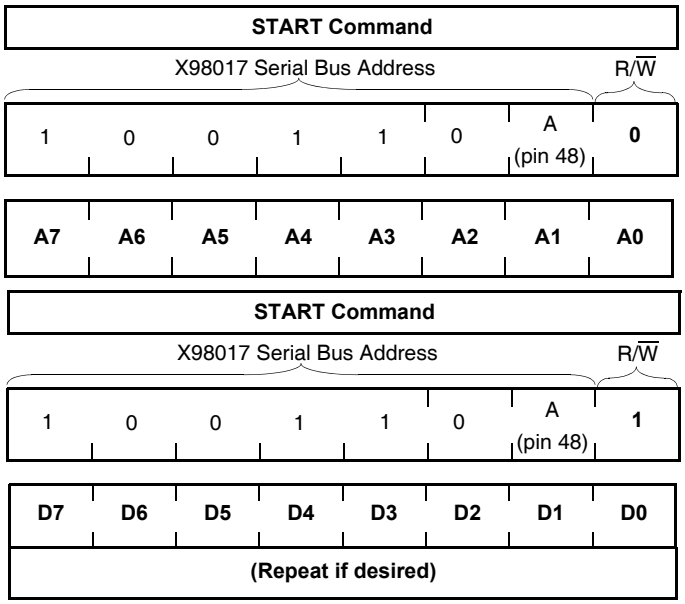

Signals the beginning of serial I/O

X98017 Serial Bus Address Write

This is the 7 bit address of the X98017 on the 2 wire bus. The address is 0x4C if pin 48 is low, 0x4D if pin 48 is high. R/$\overline{W}$ = 0, indicating next transaction will be a write.

X98017 Register Address Write

This sets the initial address of the X98017's configuration register for subsequent reading

Ends the previous transaction and starts a new one

X98017 Serial Bus Address Write

This is the 7 bit address of the X98017 on the 2 wire bus. The address is 0x4C if pin 48 is low, 0x4D if pin 48 is high. R/$\overline{W}$ = 1, indicating next transaction(s) will be a read.

X98017 Register Data Read(s)

This is the data read from the X98017's configuration register.

Note: The X98017's Configuration Register's address pointer auto increments after each data read: repeat this step to read multiple sequential bytes of data from the Configuration Register.

STOP Command

Signals the ending of serial I/O

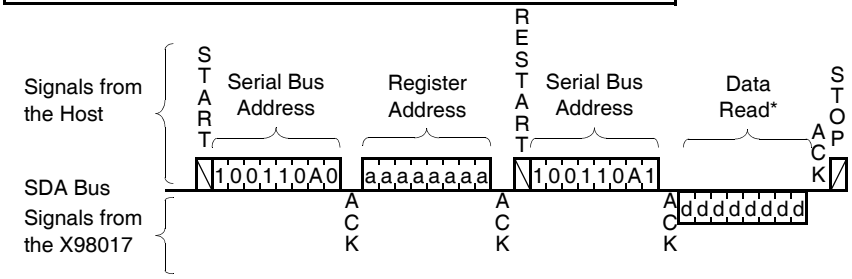

* The data read step may be repeated to read from the X98017's Configuration Register sequentially, beginning at the Register Address written in the two steps previous.

FIGURE 16. CONFIGURATION REGISTER READ

128-Lead Metric Quad Flat Pack (MQFP)

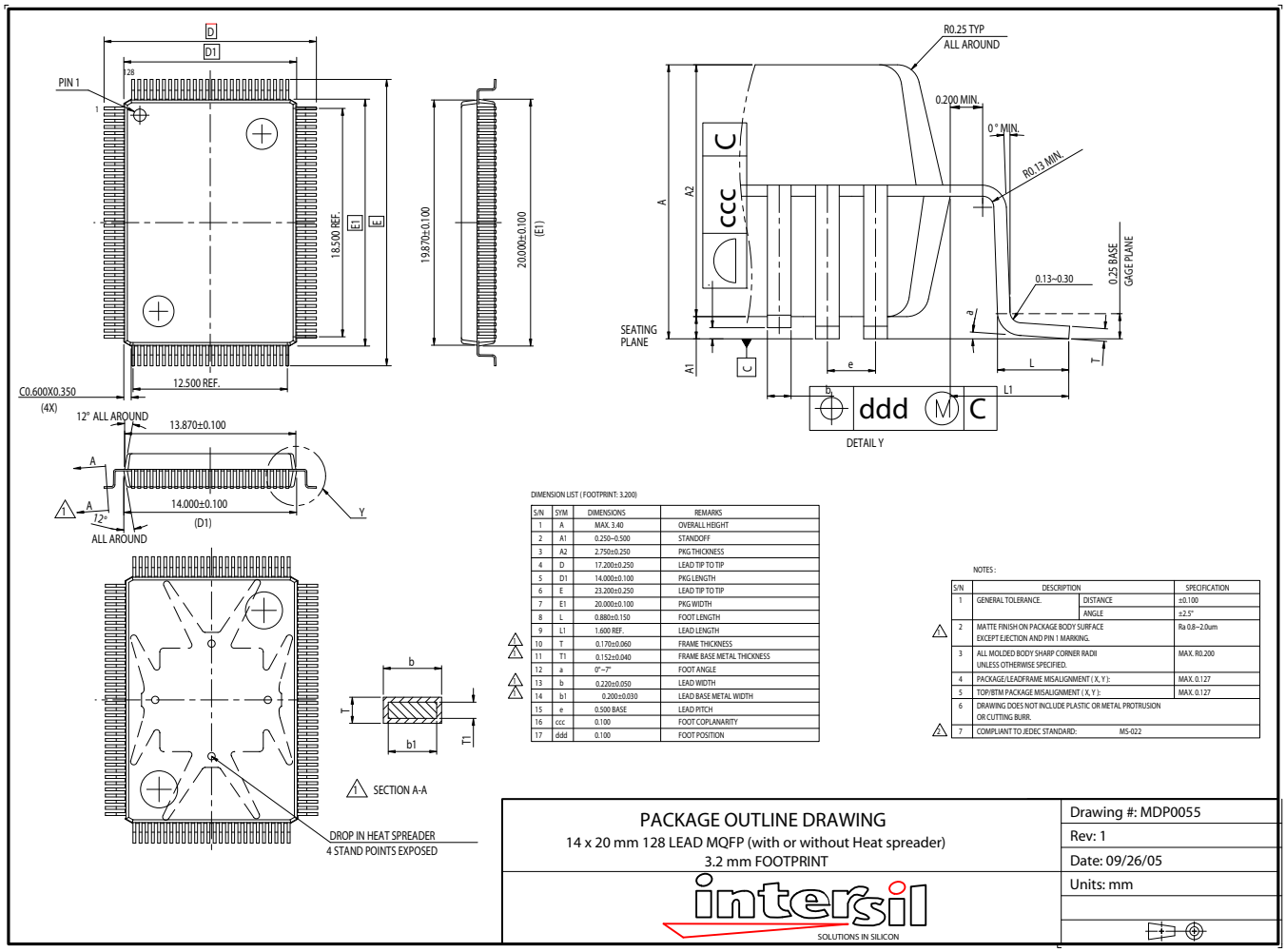

DIMENSION LIST (FOOTPRINT: 3.200)

S/N	SYM	DIMENSIONS	REMARKS
1	A	MAX. 3.40	OVERALL HEIGHT
2	A1	0.250~0.500	STANDOFF
3	A2	2.750±0.250	PKG THICKNESS
4	D	17.200±0.250	LEAD TIP TO TIP
5	D1	14.000±0.100	PKG LENGTH
6	E	23.200±0.250	LEAD TIP TO TIP
7	E1	20.000±0.100	PKG WIDTH
8	L	0.880±0.150	FOOT LENGTH
9	L1	1.600 REF.	LEAD LENGTH
10	T	0.170±0.060	FRAME THICKNESS
11	T1	0.152±0.040	FRAME BASE METAL THICKNESS
12	a	0°~7°	FOOT ANGLE
13	b	0.220±0.050	LEAD WIDTH
14	b1	0.200±0.030	LEAD BASE METAL WIDTH
15	e	0.500 BASE	LEAD PITCH
16	ccc	0.100	FOOT COPLANARITY
17	ddd	0.100	FOOT POSITION

NOTES :

S/N	DESCRIPTION		SPECIFICATION
1	GENERAL TOLERANCE.	DISTANCE	±0.100
		ANGLE	±2.5°
2	MATTE FINISH ON PACKAGE BODY SURFACE EXCEPT EJECTION AND PIN 1 MARKING.		Ra 0.8~2.0um
3	ALL MOLDED BODY SHARP CORNER RADII UNLESS OTHERWISE SPECIFIED.		MAX. R0.200
4	PACKAGE/LEADFRAME MISALIGNMENT (X, Y):		MAX. 0.127
5	TOP/BTM PACKAGE MISALIGNMENT (X, Y):		MAX. 0.127
6	DRAWING DOES NOT INCLUDE PLASTIC OR METAL PROTRUSION OR CUTTING BURR.		
7	COMPLIANT TO JEDEC STANDARD:	MS-022	

© Copyright Intersil Americas LLC 2005-2006. All Rights Reserved.
All trademarks and registered trademarks are the property of their respective owners.

For additional products, see www.intersil.com/en/products.html

Intersil products are manufactured, assembled and tested utilizing ISO9001 quality systems as noted in the quality certifications found at www.intersil.com/en/support/qualandreliability.html

Intersil products are sold by description only. Intersil may modify the circuit design and/or specifications of products at any time without notice, provided that such modification does not, in Intersil's sole judgment, affect the form, fit or function of the product. Accordingly, the reader is cautioned to verify that datasheets are current before placing orders. Information furnished by Intersil is believed to be accurate and reliable. However, no responsibility is assumed by Intersil or its subsidiaries for its use; nor for any infringements of patents or other rights of third parties which may result from its use. No license is granted by implication or otherwise under any patent or patent rights of Intersil or its subsidiaries.

For information regarding Intersil Corporation and its products, see www.intersil.com