Table of Contents

1.1 Description 2
1.2 Pin Descriptions 3
1.3 Operating Characteristics 5
1.4 Absolute Maximum Ratings 6
1.5 Recommended Operating Conditions 6
1.6 Special Feature Description 7
1.7 Device Protection 16
1.7.1 Thermal Overload Protection 16
1.7.2 Short Circuit Protection 16
1.7.3 Supply under Voltage Protection 16
1.8 Max Power Limiting feature 16
1.8.1 Power limiting VDD independent configuration 17
1.8.2 Power limiting VDD dependent configuration 17
1.8.3 ATTACK TIME, HOLD TIME, AND RELEASE TIME 17
1.8.4 Attach time Plot 18
1.8.5 Hold & Release plots 18
1.9 Power up and Power down Control 18
1.10 Application diagram 19
1.10.1 Single ended input configuration 19
1.10.2 Differential input configuration 19
1.11 Component selection 19
1.11.1 Coupling Capacitors 19
1.11.2 Bypass Capacitors 20
1.12 Layout considerations 20
1.13 Class D without filter 20
1.14 Class D with filter 20
1.14.1 Ferrite Bead filter 21
1.14.2 LC filter 21
1.15 NAU8214 EMI performance 22
Package Dimensions 23
1.16 20 Pin QFN Package 23
1.17 8 pin SOP package 24
Ordering Information 25
1.18 Nuvoton Part Number Description 25

1.1 Description

The NAU8214 is a mono high efficiency filter-free Class-D audio amplifier with variable gain amplifier, which is capable of driving a 4Ω load with up to 2.9W output power. This device provides chip enable pin with extremely low standby current and fast start-up time of 4ms.The NAU8214 is ideal for the portable applications of battery drive, low quiescent current (i.e. 1.7mA at 3.6V), Max power limiting function for a given load and superior EMI performance. It has the ability to configure the inputs in either single-ended or differential mode.

NAU8214 is available in SOP-8 package.

Key Features

- Low Quiescent Current:
  - 1.4mA at 3.6V
  - 2.7mA at 5V
- Powerful Mono Class-D Amplifier:
  - 2.9W (4Ω @ 5V, 10% THD+N)
  - 2.3W (4Ω @ 5V, 1% THD+N)
  - 1.7W (8Ω @ 5V, 10% THD+N)
  - 1.38W (8Ω @ 5V, 1% THD+N)
  - 1.48 W (4Ω @ 3.6V, 10% THD+N)
  - 1.2 W (4Ω @ 3.6V, 1% THD+N)
  - 0.87 W (8Ω @ 3.6V, 10% THD+N)
  - 0.71 W (8Ω @ 3.6V, 1% THD+N)
- Low Output Noise: 56 μV_{RMS} (A –Weighted @3.6V)
- 82dB PSRR @217Hz
- Low Current Shutdown Mode
- Click-and Pop Suppression
- Max Power limiting feature

Applications

- Smartphones
- Tablet PCs
- Personal Navigation Devices
- Rugged hand held computer and two-way radios

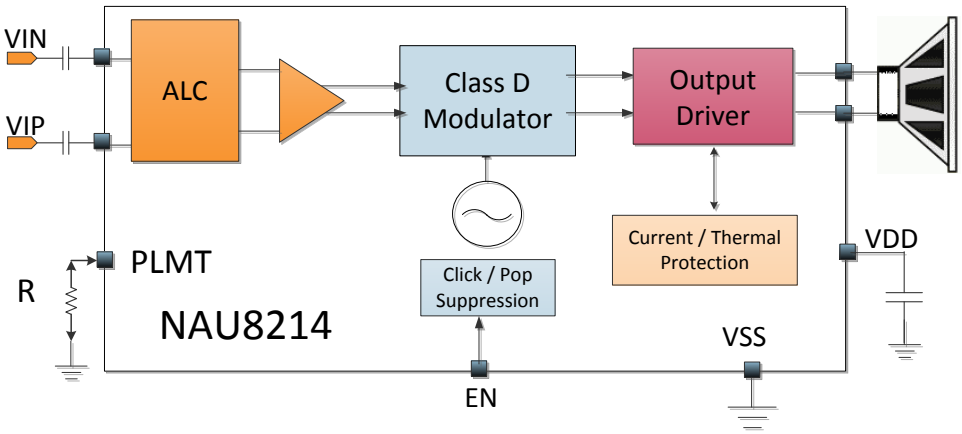

NAU8214 Block Diagram

1.2 Pin Descriptions

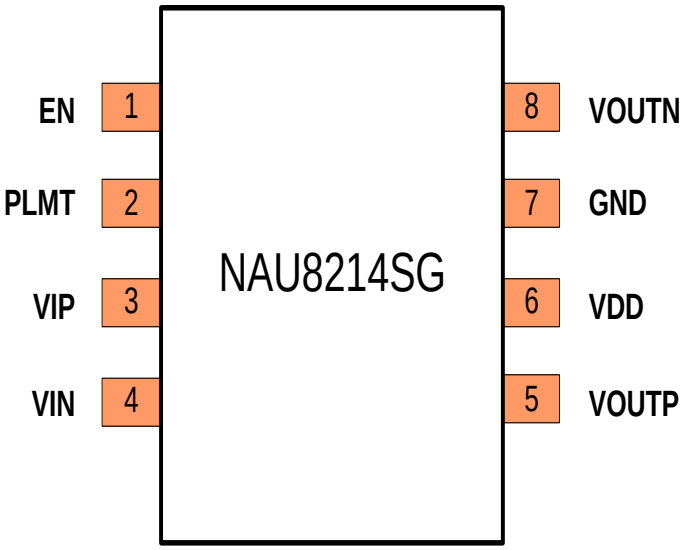

Part Number	Dimension	Package	Package Material
NAU8214SG	4mm x 5mm	SOP-8	Green

Part Number	Dimension	Package	Package Material
NAU8214YG	4mm x 4mm	QFN-20	Green

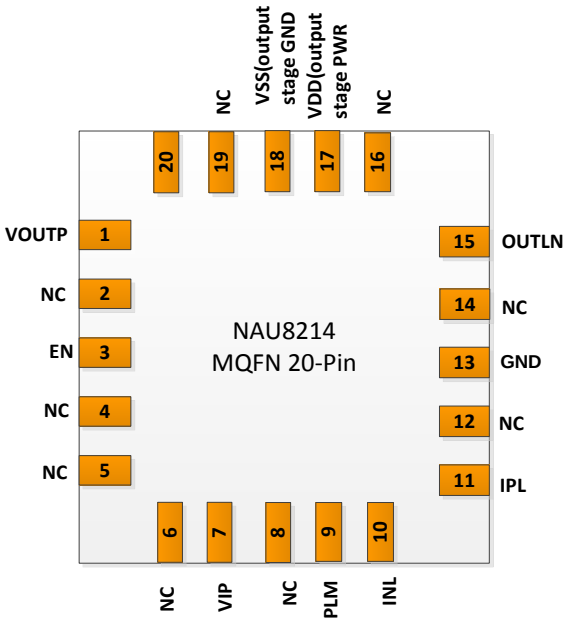

Pin #	Name	Type	Functionality
1	EN	Digital Input	Chip Enable (High = Power Up; Low = Power Down)
2	PLMT	Power Limiting	Power Limiting Threshold
3	VIP	Analog Input	Positive Differential Input
4	VIN	Analog Input	Negative Differential Input
5	VOUTP	Analog Output	Positive BTL Output
6	VDD	Supply	Power Supply
7	VSS	Supply	High Current Ground
8	VOUTN	Analog Output	Negative BTL Output

Table 1 NAU8214 Pin description

1.3 Operating Characteristics

Conditions: EN = VDD = 5V, VSS = 0V, Av = 18dB, $Z_L = \infty$, Bandwidth = 20Hz to 22kHz, T_A = 25 °C

Parameter	Symbol	Comments/Conditions		Min	Typ	Max	Units
Power Delivered							
Output Power	P_{out}	$Z_L = 4\Omega + 33\mu H$ THD + N = 10%	VDD = 5.0V		2.9		W
			VDD = 3.6V		1.48		
		$Z_L = 4\Omega + 33\mu H$ THD + N = 1%	VDD = 5.0V		2.3		
			VDD = 3.6V		1.2		
		$Z_L = 8\Omega + 68\mu H$ THD + N = 10%	VDD = 5.0V		1.7		
			VDD = 3.6V		0.87		
		$Z_L = 8\Omega + 68\mu H$ THD + N = 1%	VDD = 5.0V		1.38		
			VDD = 3.6V		0.71		

Parameter	Symbol	Comments/Conditions	Min	Typ	Max	Units
Chip Enable (EN)						
Voltage Enable High	V_{EN_H}	VDD = 2.5V to 5.5V	1.3			V
Voltage Enable Low	V_{EN_L}	VDD = 2.5V to 5.5V			0.35	V
Input Leakage Current				0.1	2.0	µA
Thermal and Current Protection						
Thermal Shutdown Temperature				150		°C
Thermal Shutdown Hysteresis				20		°C
Limiting Current	I_{LIMIT}			2.0		A
Single Ended Input Resistance	R_{IN}	A_V = 18dB		10		kΩ
Resistance (EN pin to GND)	R_{EN}			300		kΩ

Parameter	Symbol	Comments/Conditions	Min	Typ	Max	Units
Normal Operation						
Quiescent Current Consumption	I_{QUI}	VDD = 3.6V		1.4		mA
		VDD = 5V		2.7		mA
Shut Down Current	I_{OFF}	EN = 0		0.5		µA
Oscillator Frequency	f_{OSC}			300		kHz
Efficiency	η	SOP-8 (Z_L=8Ω)		91		%
Start Up Time	T_{start}			4		ms
Output Offset Voltage	V_{OS}			±1		mV
Common Mode Rejection Ratio	CMRR	f_{IN} = 1KHz		60		dB
Power Supply Rejection Ratio	PSRR	DC PSRR		92		dB
		AC PSRR V_{RIPPLE} = 0.2Vpp @217Hz		82		dB
		V_{RIPPLE} = 0.2Vpp@1kHz		80		dB
		V_{RIPPLE} = 0.2Vpp@10kHz		60		dB
Noise Performance		V_{DD} = 3.6V (A-weighted)		56		μV_{RMS}

Parameter	Symbol	Comments/Conditions	Min	Typ	Max	Units

1.4 Absolute Maximum Ratings

Parameter	Symbol	Condition	Min	Max	Units
DC Power Supply	VDD	VDD-VSS	-0.30	+6.00	V
Analog Input Voltage	AV_{IN}	V_{IN}-VSS	-0.3	VDD+0.3	V
Digital Input Voltage	DV_{IN}	DV_{IN}-VSS	-0.3	VDD+0.3	V
Minimum Load Resistance	R_L			3.2	Ω
Continuous Power Dissipation	P_O	WCSP, T=25°C		530	mW
Continuous Power Dissipation	P_O	WCSP, T=85°C		275	mW
Storage temperature range	Tst		-55	+150	°C

CAUTION: Do not operate at or near the maximum ratings listed for extended periods of time. Exposure to such conditions may adversely influence product reliability and result in failures not covered by warranty.

1.5 Recommended Operating Conditions

Parameter	Symbol	Condition	Min	Typical	Max	Units
DC Power Supply	VDD	VDD-VSS	2.50	5.00	5.50	V
High-level input voltage(EN pin)	V_{IH}		1.30			V
Low-level input voltage(EN pin)	V_{IL}				0.35	V
Operating Temperature	T_A		-40	+25	+85	°C

TYPICAL PERFORMANCE CHARACTERISTICS

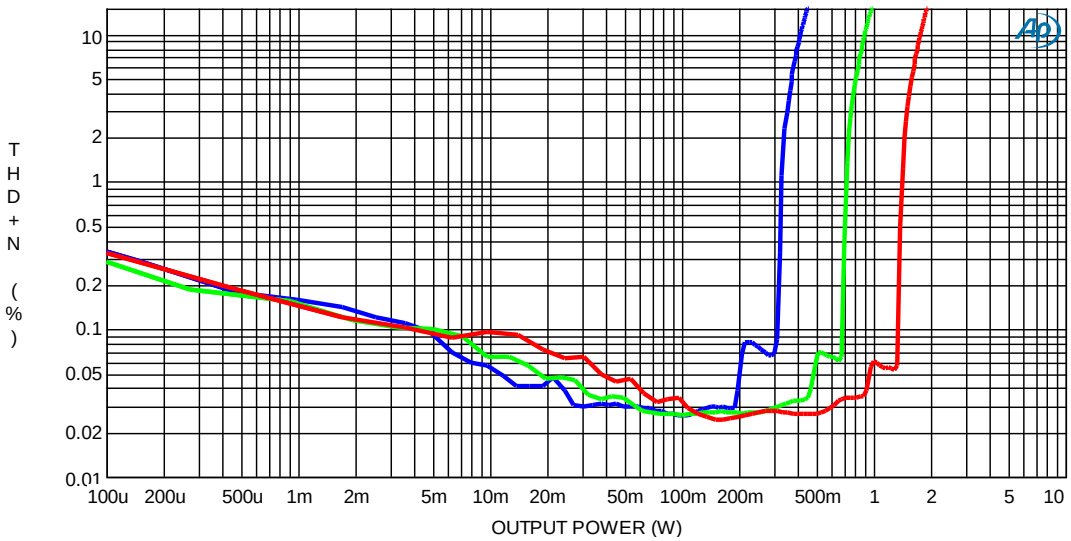

Sweep	Trace	Color	Line Style	Thick	Data	Axis	Comment
1	1	Blue	Solid	3	Anlr.THD+N Ratio	Left	
2	1	Green	Solid	3	Anlr.THD+N Ratio	Left	
3	1	Red	Solid	3	Anlr.THD+N Ratio	Left	

A-A THD+N % vs Output Levl_8ohm.at27

THD + N vs. Output Power into 8 Ω + 66 μH, Gain = 18 dB

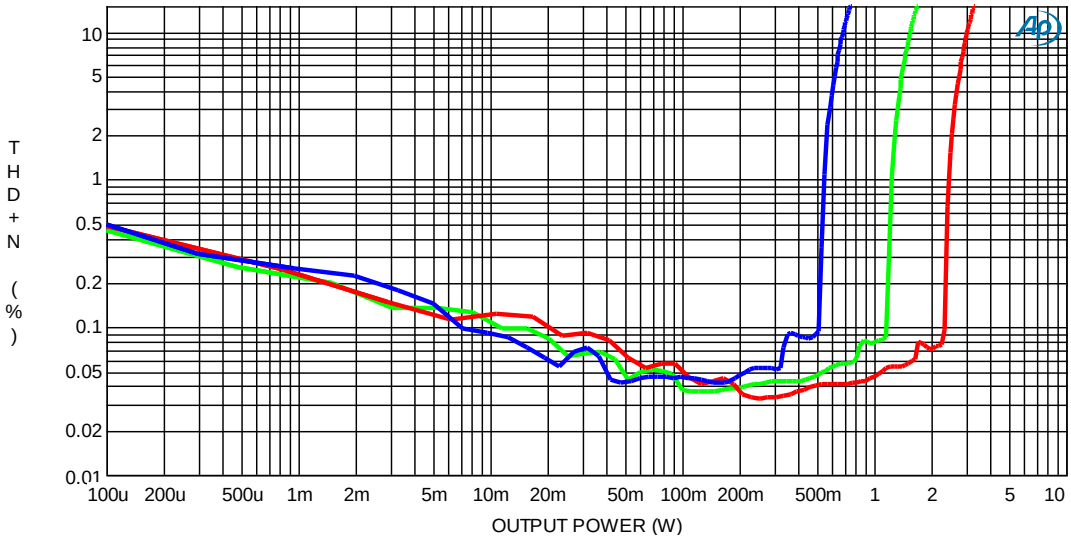

Sweep	Trace	Color	Line Style	Thick	Data	Axis	Comment
1	1	Blue	Solid	3	S2C.Anlr.THD+N Ratio	Left	VDD 2.5V
2	1	Green	Solid	3	S2C.Anlr.THD+N Ratio	Left	VDD 3.6V
3	1	Red	Solid	3	S2C.Anlr.THD+N Ratio	Left	VDD 5V

A-A THD+N % vs Output Levl.at27

THD + N vs. Output Power into 4 Ω + 33 μH, Gain = 18 dB

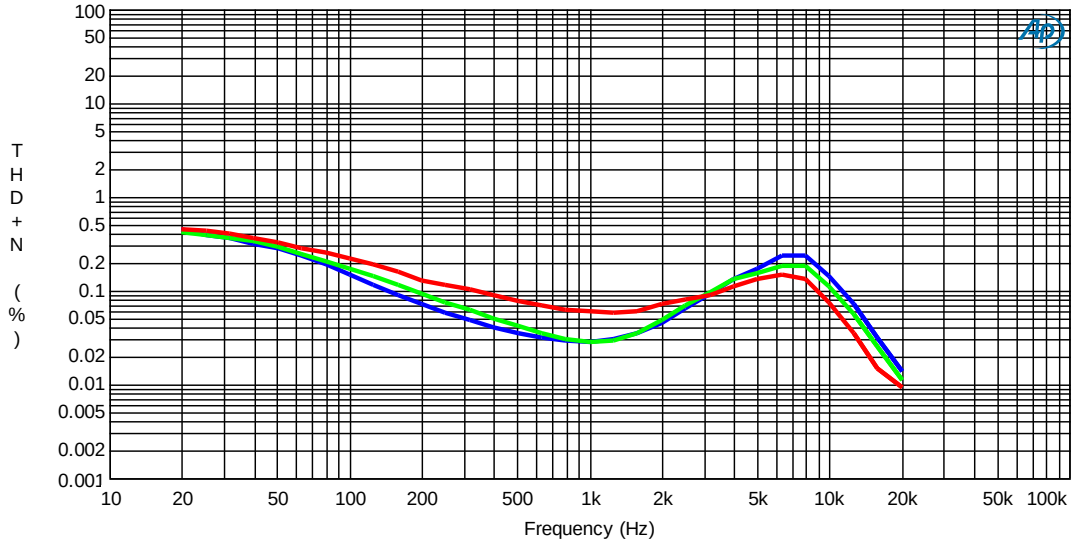

Sweep	Trace	Color	Line Style	Thick	Data	Axis	Comment
1	1	Blue	Solid	3	Anlr.THD+N Ratio	Left	OUTPUT POWER 0.25W
2	1	Green	Solid	3	Anlr.THD+N Ratio	Left	OUTPUT POWER 0.5W
3	1	Red	Solid	3	Anlr.THD+N Ratio	Left	OUTPUT POWER 1W

A-A THD+N % vs Frequency_8ohm.at27

THD + N vs. Frequency, VDD = 5 V, RL = 8 Ω + 66 μH, Gain = 18 dB

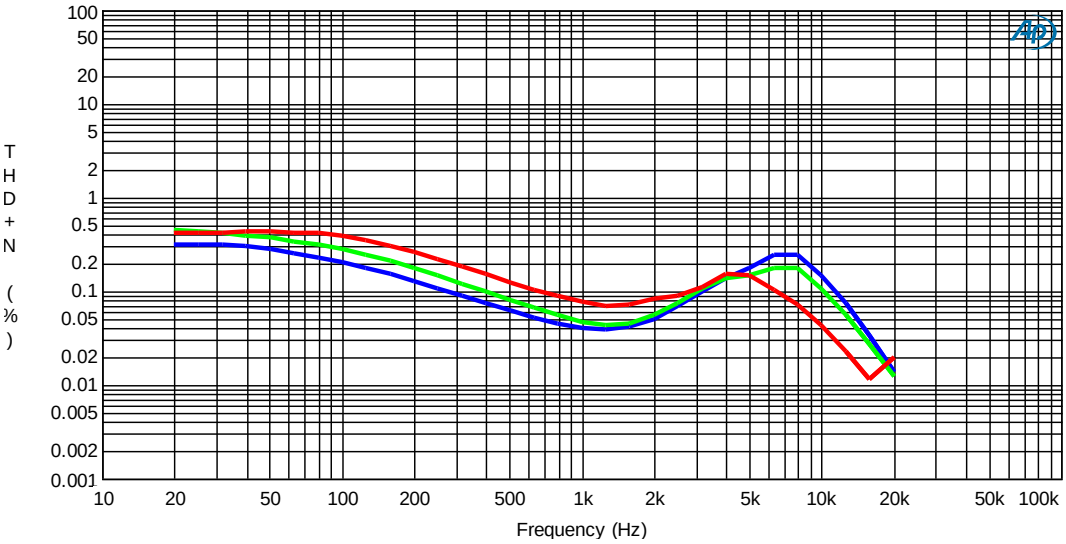

Sweep	Trace	Color	Line Style	Thick	Data	Axis	Comment
1	1	Blue	Solid	3	Anlr.THD+N Ratio	Left	OUTPUT POWER 0.5W
2	1	Green	Solid	3	Anlr.THD+N Ratio	Left	OUTPUT POWER 1W
3	1	Red	Solid	3	Anlr.THD+N Ratio	Left	OUTPUT POWER 2W

A-A THD+N % vs Frequency_4ohm.at27

THD + N vs. Frequency, VDD = 5 V, RL = 4 Ω + 33 μH, Gain = 18 dB

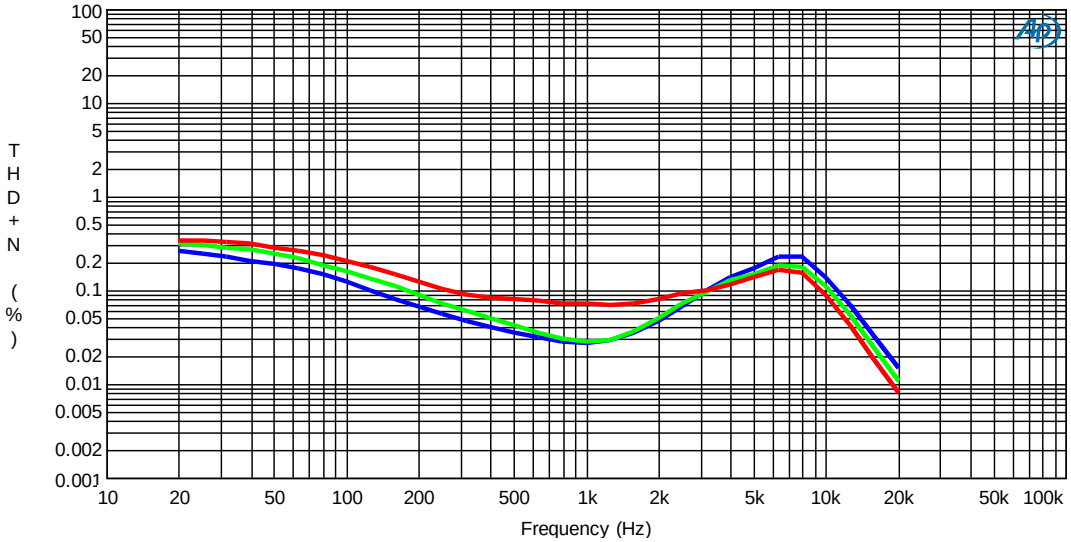

Sweep	Trace	Color	Line Style	Thick	Data	Axis	Comment
1	1	Blue	Solid	3	Anlr.THD+N Ratio	Left	OUTPUT POWER 0.125W
2	1	Green	Solid	3	Anlr.THD+N Ratio	Left	OUTPUT POWER 0.25W
3	1	Red	Solid	3	Anlr.THD+N Ratio	Left	OUTPUT POWER 0.5W

A-A THD+N % vs Frequency_8ohm.at27

THD + N vs. Frequency, VDD = 3.6 V, RL = 8 Ω + 66 μH, Gain = 18 dB

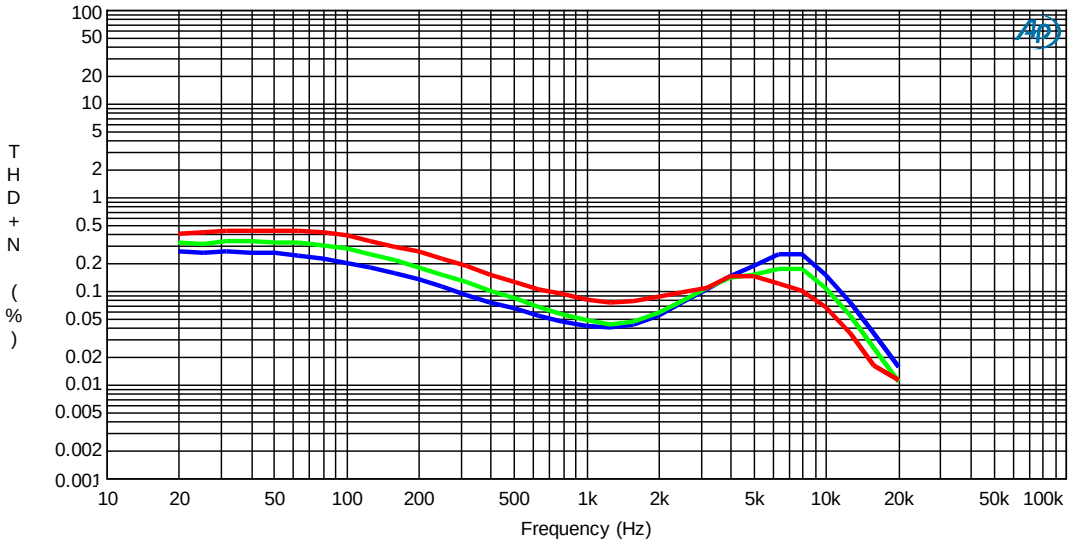

Sweep	Trace	Color	Line Style	Thick	Data	Axis	Comment
1	1	Blue	Solid	3	Anlr.THD+N Ratio	Left	OUTPUT POWER 0.25W
2	1	Green	Solid	3	Anlr.THD+N Ratio	Left	OUTPUT POWER 0.5W
3	1	Red	Solid	3	Anlr.THD+N Ratio	Left	OUTPUT POWER 1W

A-A THD+N % vs Frequency_4ohm.at27

THD + N vs. Frequency, VDD = 3.6 V, RL = 4 Ω + 33 μH, Gain = 18 dB

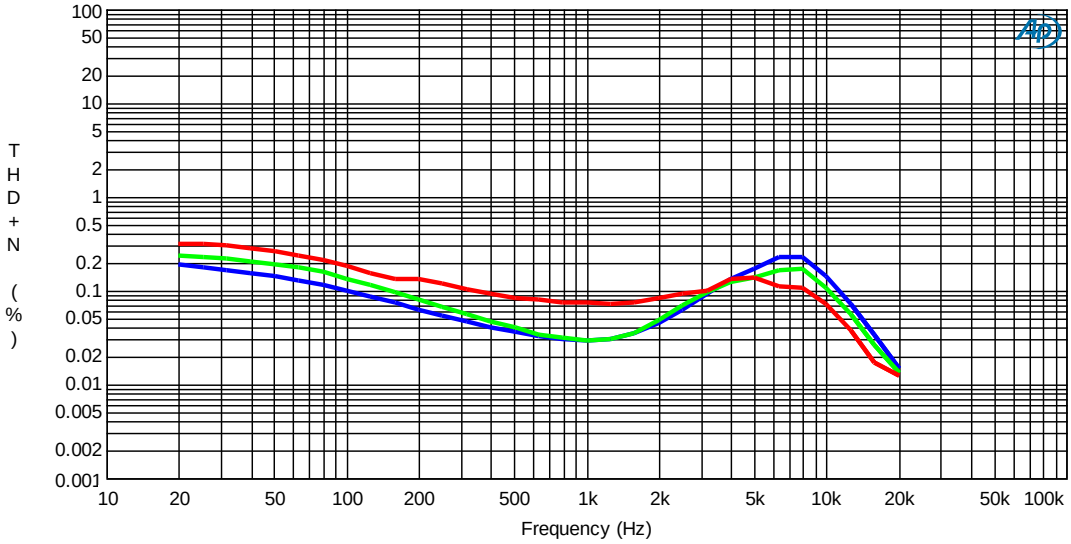

Sweep	Trace	Color	Line Style	Thick	Data	Axis	Comment
1	1	Blue	Solid	3	Anlr.THD+N Ratio	Left	OUTPUT POWER 0.0625W
2	1	Green	Solid	3	Anlr.THD+N Ratio	Left	OUTPUT POWER 0.125W
3	1	Red	Solid	3	Anlr.THD+N Ratio	Left	OUTPUT POWER 0.25W

A-A THD+N % vs Frequency_8ohm.at27

THD + N vs. Frequency, VDD = 2.5 V, RL = 8 Ω + 66 μH, Gain = 18 dB

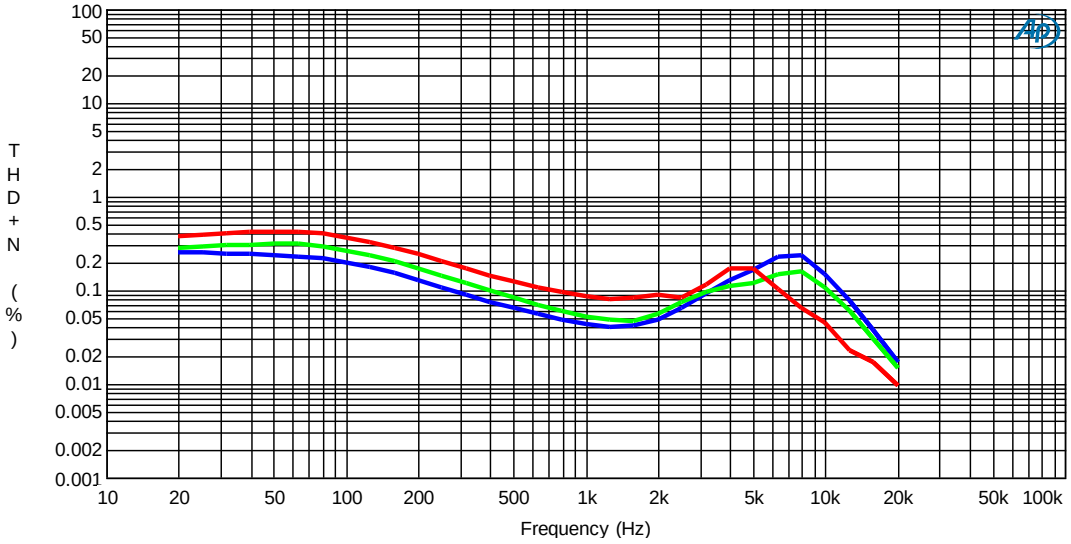

Sweep	Trace	Color	Line Style	Thick	Data	Axis	Comment
1	1	Blue	Solid	3	Anlr.THD+N Ratio	Left	OUTPUT POWER 0.125W
2	1	Green	Solid	3	Anlr.THD+N Ratio	Left	OUTPUT POWER 0.25W
3	1	Red	Solid	3	Anlr.THD+N Ratio	Left	OUTPUT POWER 0.5W

A-A THD+N % vs Frequency_4ohm.at27

THD + N vs. Frequency, VDD = 2.5 V, RL = 4 Ω + 33 μH, Gain = 18 dB

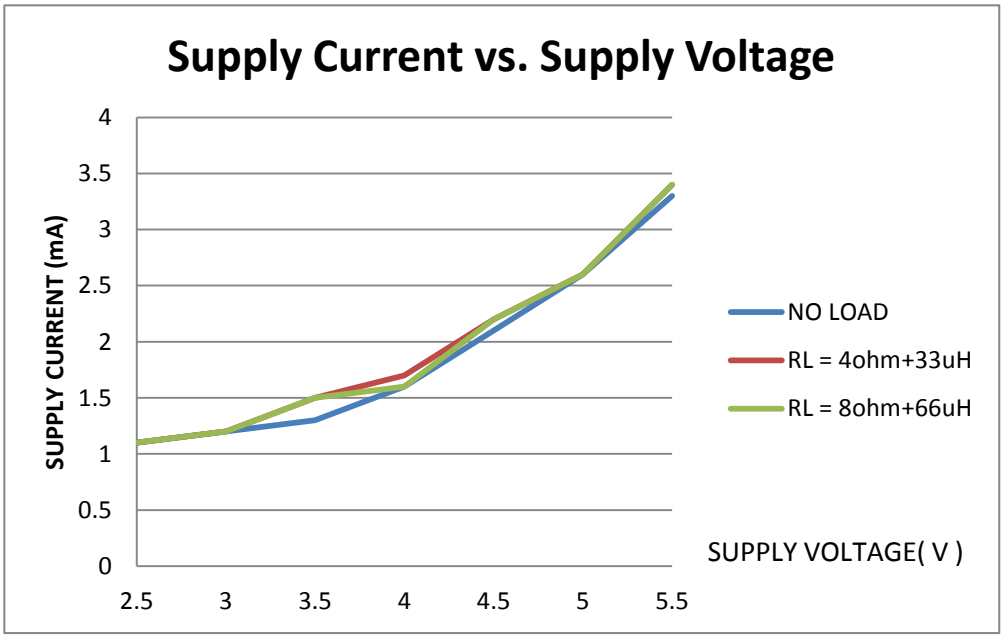
Supply Current vs. Supply Voltage
SUPPLY CURRENT (mA)
4
3.5
3
2.5
2
1.5
1
0.5
0
2.5
3
3.5
4
4.5
5
5.5
NO LOAD
RL = 4ohm+33uH
RL = 8ohm+66uH
SUPPLY VOLTAGE(V)

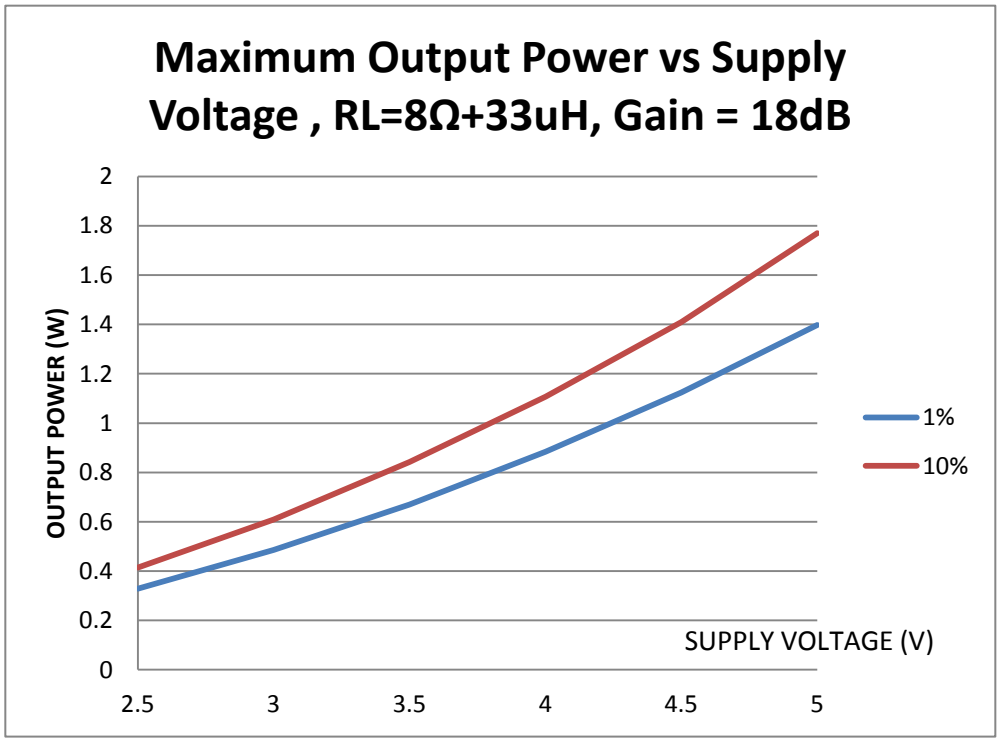
Maximum Output Power vs Supply Voltage , RL=8Ω+33uH, Gain = 18dB
OUTPUT POWER (W)
2
1.8
1.6
1.4
1.2
1
0.8
0.6
0.4
0.2
0
2.5
3
3.5
4
4.5
5
1%
10%
SUPPLY VOLTAGE (V)

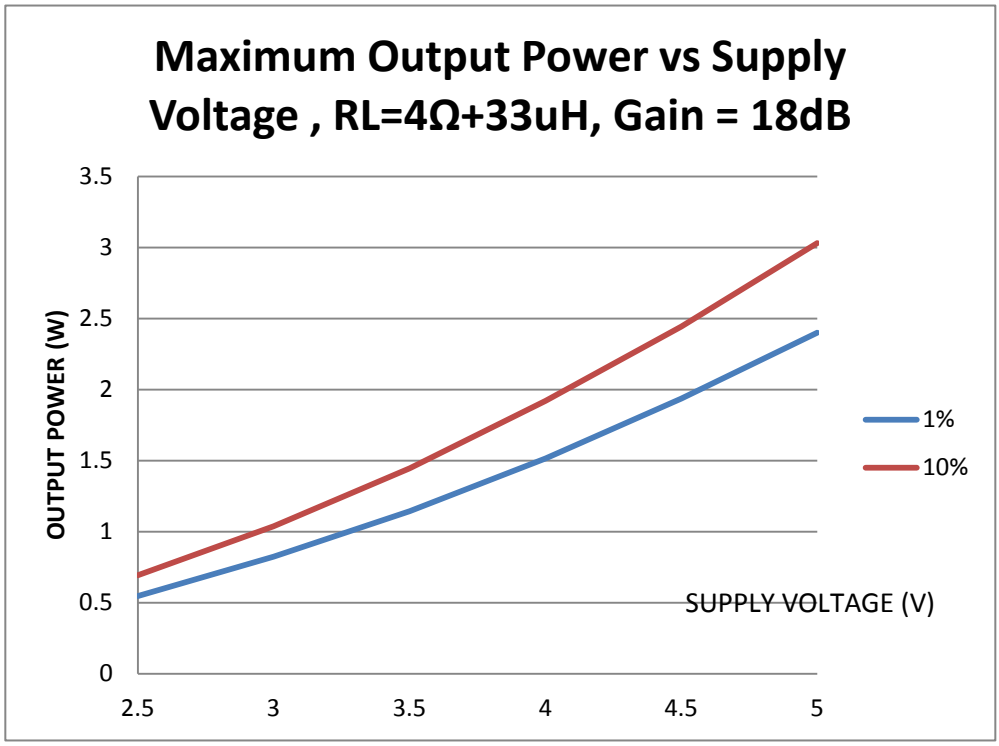
Maximum Output Power vs Supply Voltage , RL=4Ω+33uH, Gain = 18dB
OUTPUT POWER (W)
3.5
3
2.5
2
1.5
1
0.5
0
2.5
3
3.5
4
4.5
5
SUPPLY VOLTAGE (V)
1%
10%

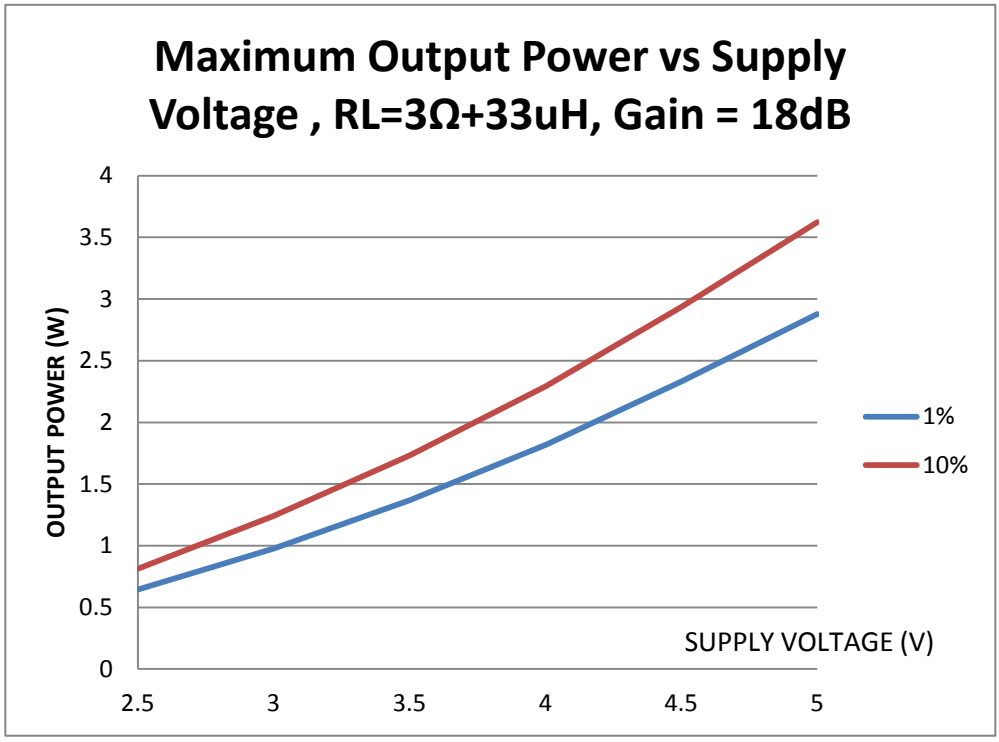
Maximum Output Power vs Supply Voltage , RL=3Ω+33uH, Gain = 18dB
OUTPUT POWER (W)
4
3.5
3
2.5
2
1.5
1
0.5
0
2.5
3
3.5
4
4.5
5
SUPPLY VOLTAGE (V)
1%
10%

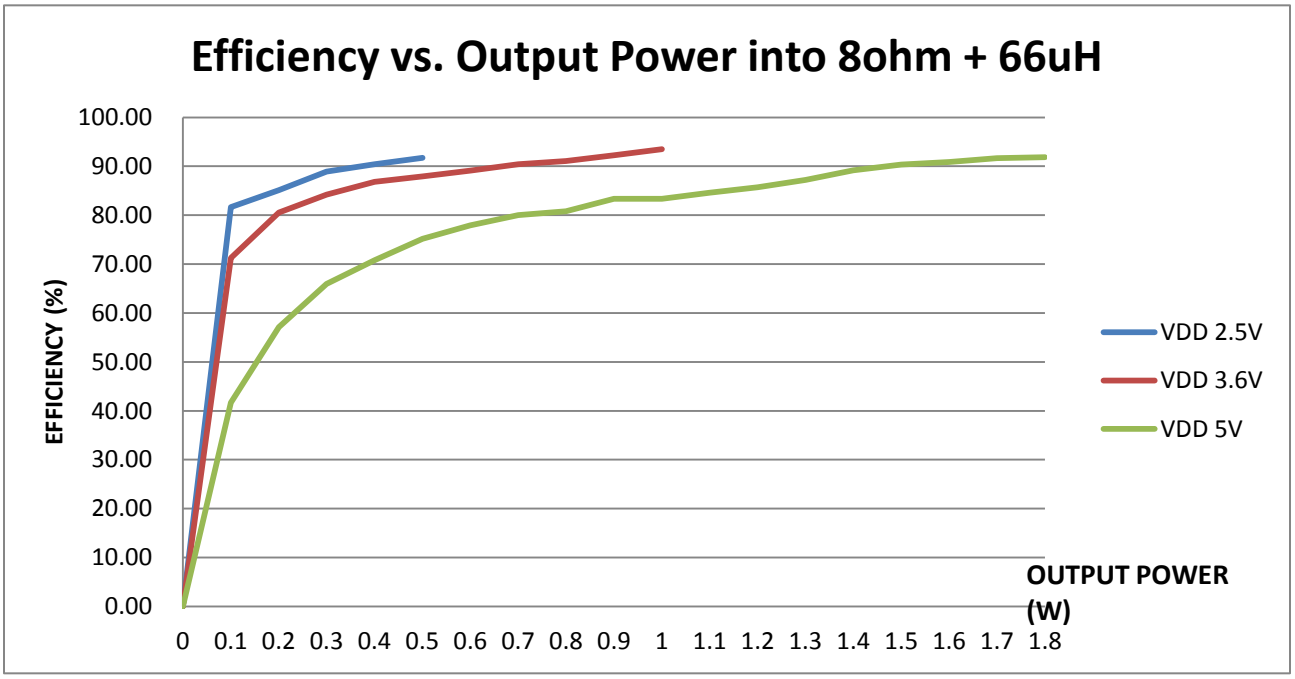
Efficiency vs. Output Power into 8ohm + 66uH
EFFICIENCY (%)
100.00
90.00
80.00
70.00
60.00
50.00
40.00
30.00
20.00
10.00
0.00
0 0.1 0.2 0.3 0.4 0.5 0.6 0.7 0.8 0.9 1 1.1 1.2 1.3 1.4 1.5 1.6 1.7 1.8
OUTPUT POWER (W)
VDD 2.5V
VDD 3.6V
VDD 5V

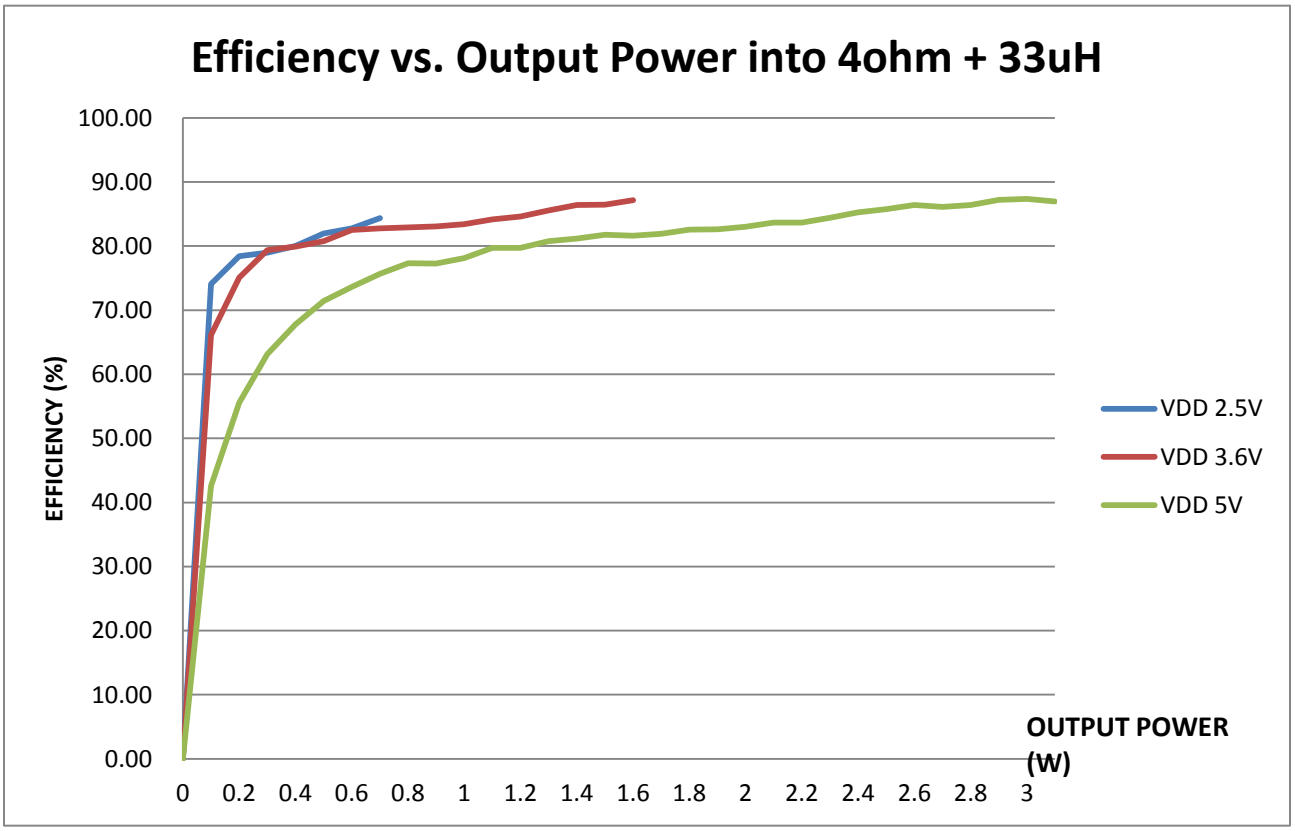
Efficiency vs. Output Power into 4ohm + 33uH
EFFICIENCY (%)
100.00
90.00
80.00
70.00
60.00
50.00
40.00
30.00
20.00
10.00
0.00
0 0.2 0.4 0.6 0.8 1 1.2 1.4 1.6 1.8 2 2.2 2.4 2.6 2.8 3
OUTPUT POWER (W)
VDD 2.5V
VDD 3.6V
VDD 5V

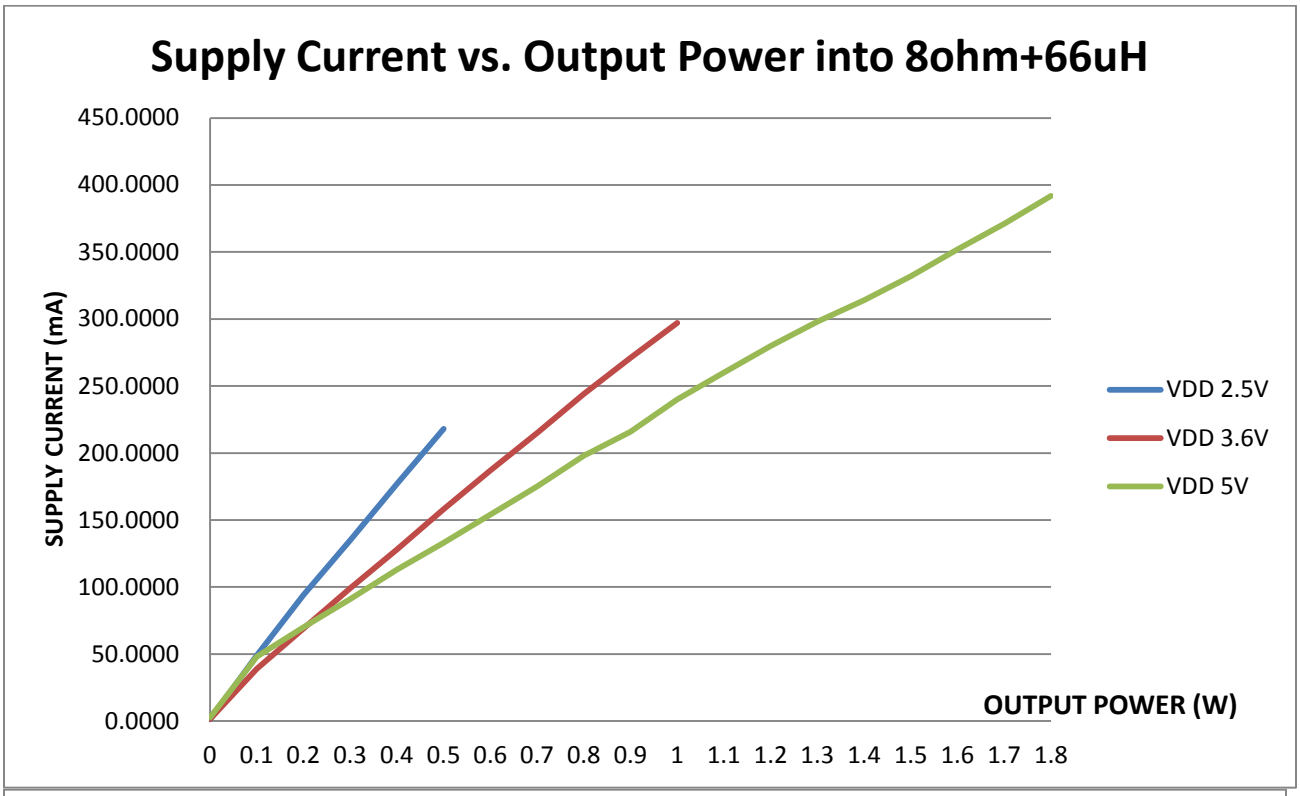
Supply Current vs. Output Power into 8ohm+66uH
SUPPLY CURRENT (mA)
450.0000
400.0000
350.0000
300.0000
250.0000
200.0000
150.0000
100.0000
50.0000
0.0000
OUTPUT POWER (W)
0 0.1 0.2 0.3 0.4 0.5 0.6 0.7 0.8 0.9 1 1.1 1.2 1.3 1.4 1.5 1.6 1.7 1.8
VDD 2.5V
VDD 3.6V
VDD 5V

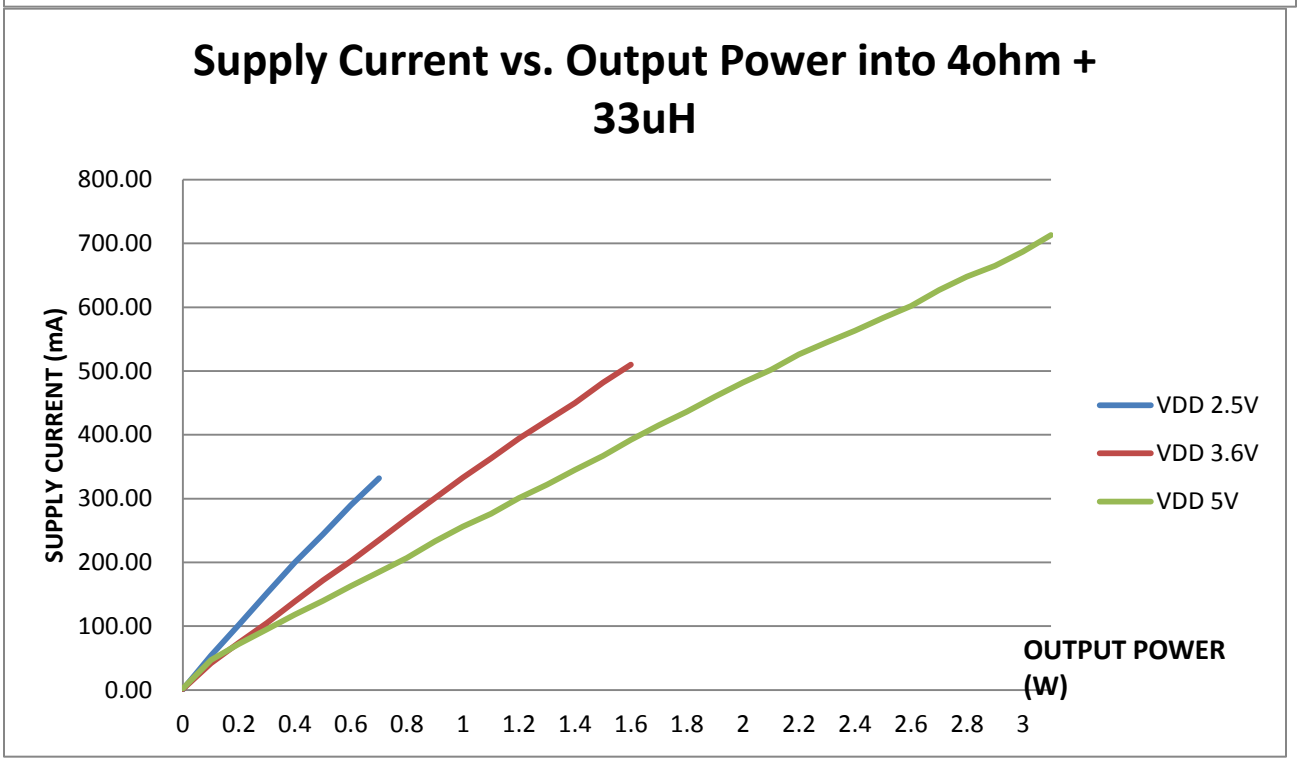
Supply Current vs. Output Power into 4ohm + 33uH
SUPPLY CURRENT (mA)
800.00
700.00
600.00
500.00
400.00
300.00
200.00
100.00
0.00
OUTPUT POWER (W)
0 0.2 0.4 0.6 0.8 1 1.2 1.4 1.6 1.8 2 2.2 2.4 2.6 2.8 3
VDD 2.5V
VDD 3.6V
VDD 5V

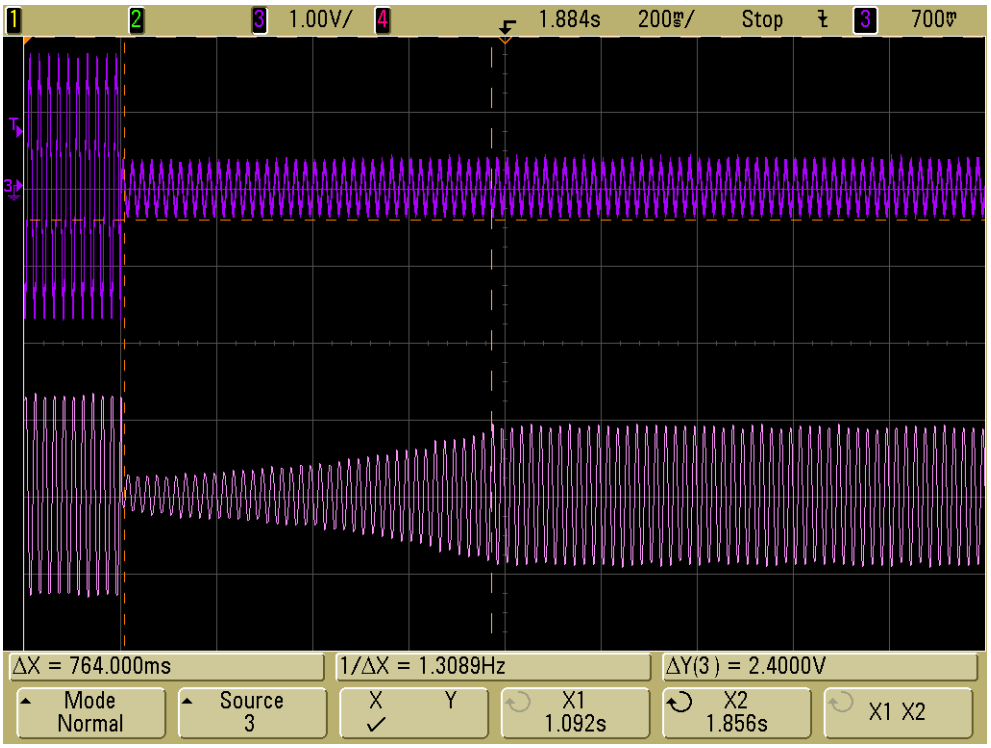

ALC release waveform , VDD 5V Input 0dBV / 3kHz sine Output LC Load 4ohm+30uH

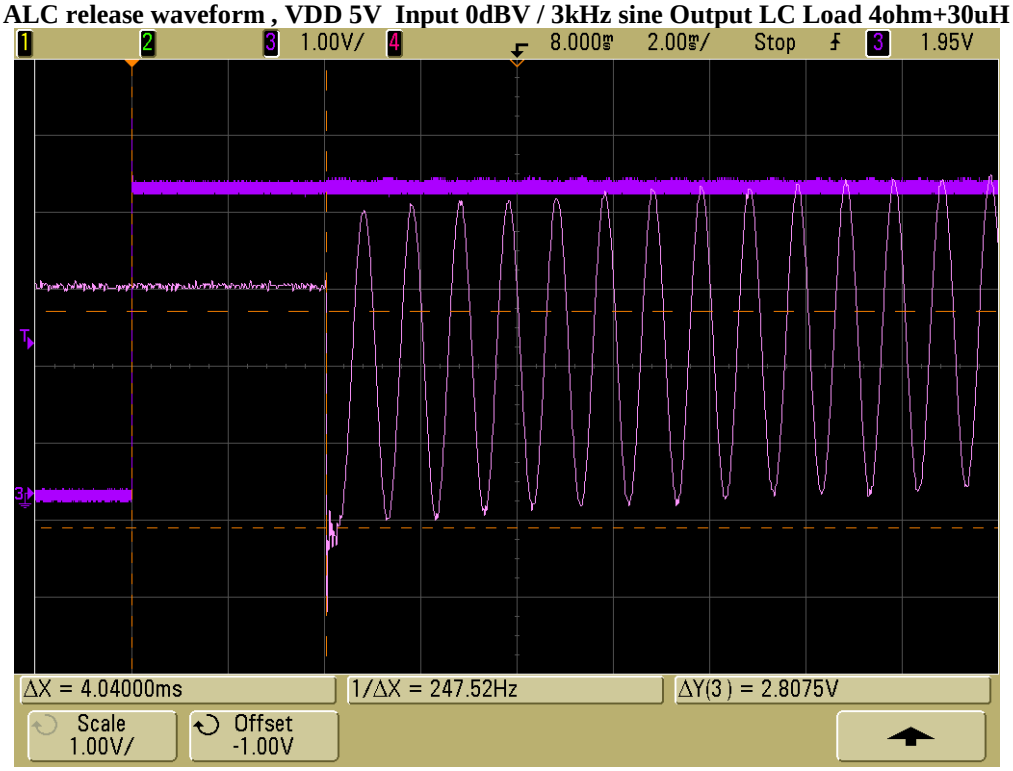

Start up time 4ms , VDD 5V Input 0dBV / 1kHz sine Output LC Load 4ohm+30uH

1.6 Special Feature Description

The NAU8214 offers excellent quantity performance as high efficiency, high output power and low quiescent current. It also provides the following special features.

1.7 Device Protection

The NAU8214 includes device protection for three operating scenarios. They are

1. Thermal Overload
2. Short circuit
3. Supply under voltage

1.7.1 Thermal Overload Protection

When the device internal junction temperature reaches 150°C, the NAU8214 will disable the output drivers. When the device cools down and a safe operating temperature of 130°C has been reached for at least about 100ms, the output drivers will be enabled again.

1.7.2 Short Circuit Protection

If a short circuit is detected on any of the pull-up or pull-down devices on the output drivers for at least 16.7µs, the output drivers will be disabled for 100ms. The output drivers will then are enabled again and check for the short circuit. If the short circuit is still present, the output drivers are disabled after 16.7µs. This cycle will continue until the short circuit is removed. The short circuit threshold is 2.0A at 3.6V.

1.7.3 Supply under Voltage Protection

If the supply voltage drops under 2.1V, the output drivers will be disabled while the NAU8214 control circuitry still operates. This will avoid the battery supply to drag down too low before the host processor can safely shut down the devices on the system. If the supply drops further below 1.6 V the internal power on reset is activated and puts the entire device in power down state.

1.8 Max Power Limiting feature

The NAU8214 has a unique feature that limits the Maximum output power delivered to the load. This Max power limit is set by using external resistor connected to the dedicated pin PLMT. Once the threshold is set, the NAU8214 will not allow the voltage output more than the set value irrespective of the power supply voltage variations. Because of this output voltage control, the NAU8214 is able to achieve Power limit function for any given load. There are two methods to set the maximum output amplitude threshold (Vout) during the limiting mode. The following equations show the Max output voltage limit in terms of external resistor (RLMT). In equation 1, RLMT is tied to GND, which sets (Vout) as VDD independent, unlike equations two where Vout is proportional to (VDD-1.2V). The maximum peak voltage (Vout) is VDD dependent with offset voltage 1.2V in equation 2.

1. Vout $= 2 * \frac{1.2}{RLMT} * 100K$ V with RLMT tied to ground
2. Vout $= 2 * \frac{(VDD-1.2)}{RLMT} * 100K$ V with RLMT tied to supply voltage

The maximum output power is calculated from the following eq.

$$\text{Pout} = \frac{\left(\frac{Vout}{\sqrt{2}}\right)^2}{R}$$ Where R is the Load resistance (Speaker Resistance)

If the supply voltage is lower than the pre-set Max Vout voltage, then the output signal will clip to the supply voltage rather than being limited by the power limiter.

1.8.1 Power limiting VDD independent configuration

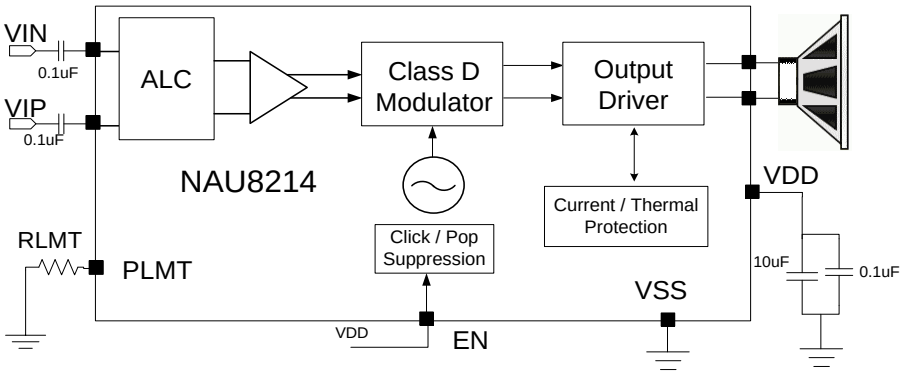

1.8.2 Power limiting VDD dependent configuration

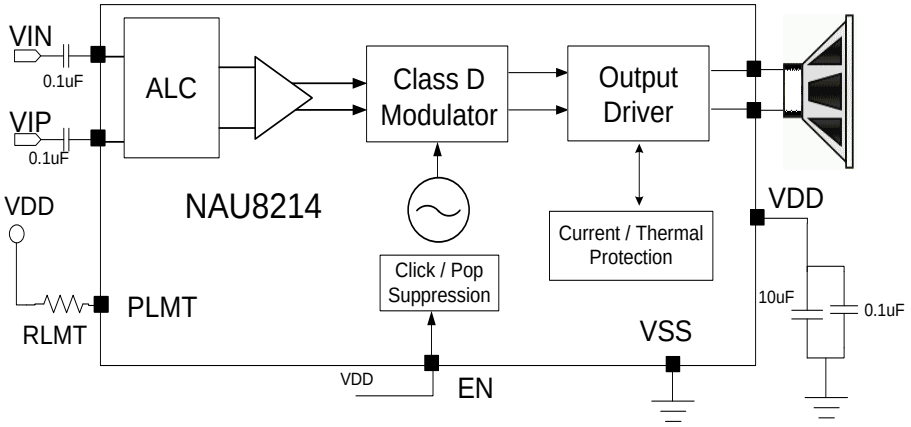

1.8.3 ATTACK TIME, HOLD TIME, AND RELEASE TIME

When the input to the NAU8214 exceeds a preset threshold, MPL reduces amplifier gain rapidly until its output settles to a target level. This gain level is maintained for a certain period. If the input does not exceed the threshold again, MPL increases the gain gradually. The attack time is the time taken to reduce the gain from maximum to minimum. The hold time is the time to sustain the reduced gain. The release time is the time taken to increase the gain from minimum to maximum. See below plots for these times.

1.8.4 Attach time Plot

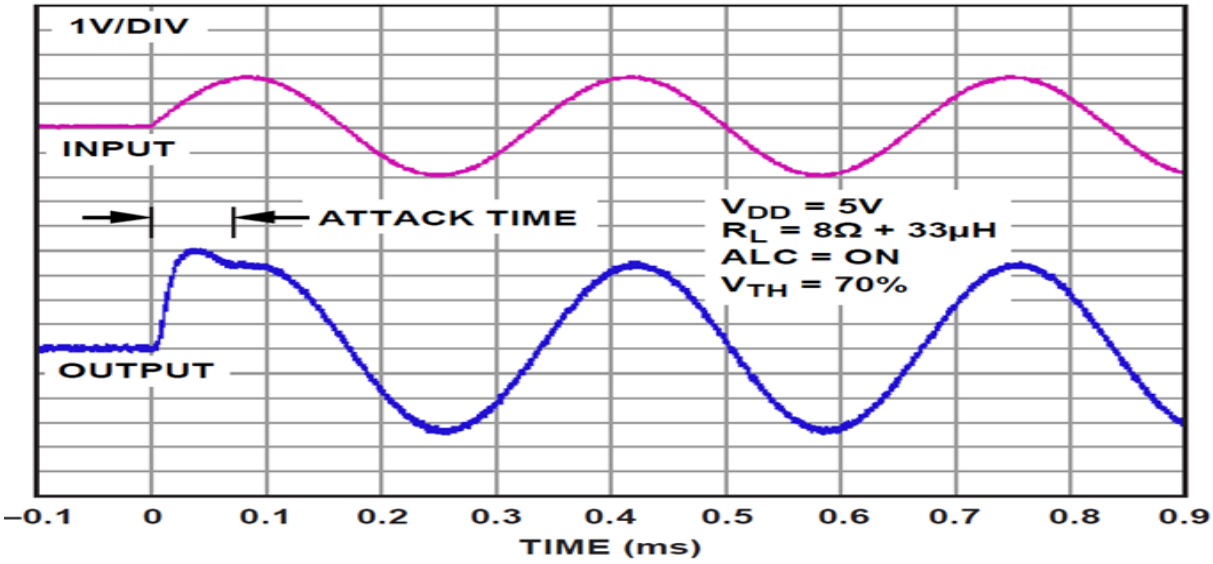

1.8.5 Hold & Release plots

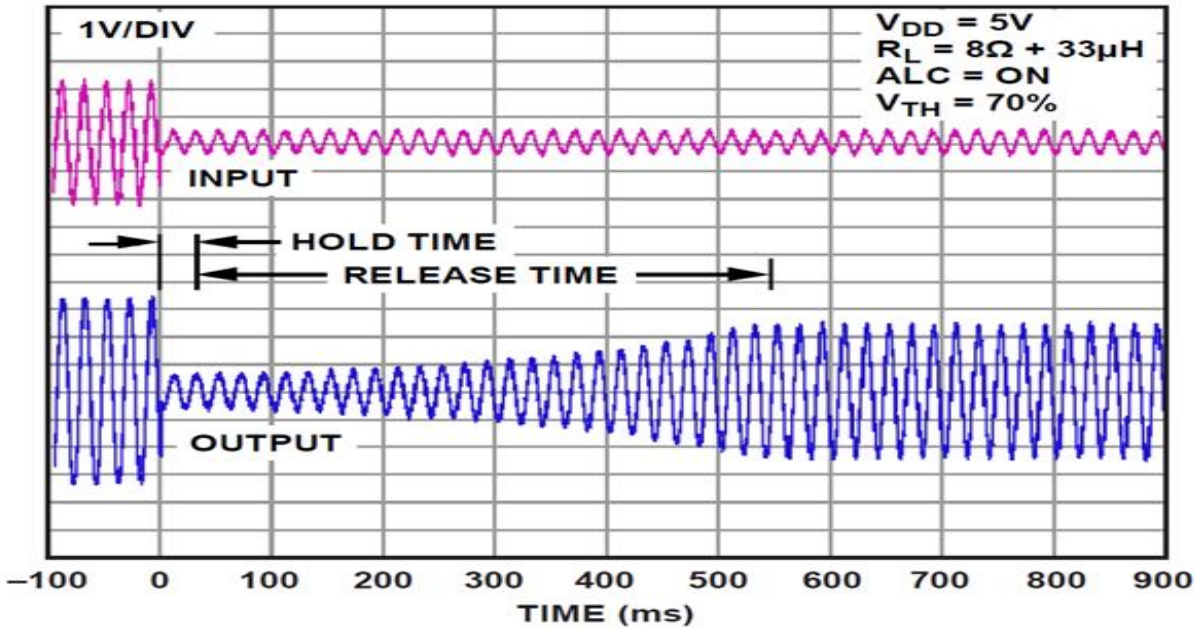

1.9 Power up and Power down Control

When the supply voltage ramps up, the internal power on reset, circuit is triggered. At this time, all internal circuits will be set to power down state. The device can be enabled by setting the EN pin high. Upon setting the EN pin high, the device will go through an internal power up sequence in order to minimize 'pops' on the speaker output. The complete power up sequence will take about 4ms. The device will power down in about 30µs, when the EN pin is set low.

It is important to keep the input signal at zero amplitude or enable the mute condition in order to minimize the 'pops' when the EN pin is toggled.

1.10 Application diagram

1.10.1 Single ended input configuration

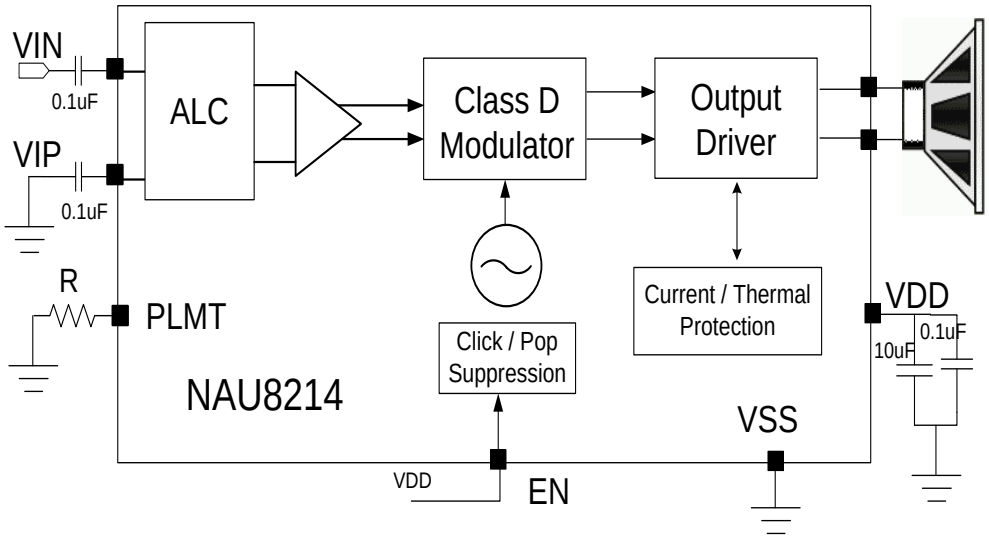

1.10.2 Differential input configuration

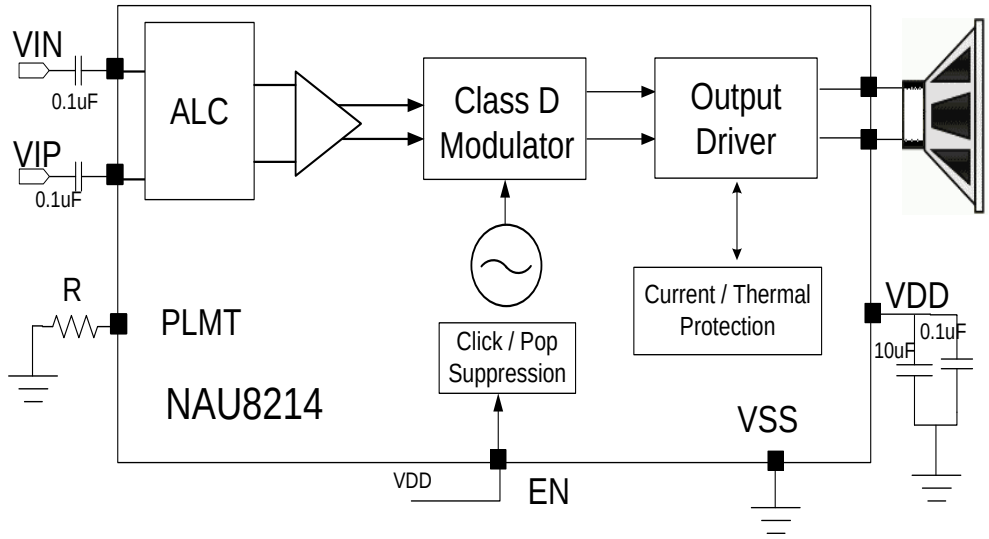

1.11 Component selection

1.11.1 Coupling Capacitors

An ac coupling capacitor (C_{in}) is used to block the dc content from the input source. The input resistance of the amplifier (R_{in}) together with the C_{in} will act as a high pass filter. So depending on the required cut off frequency the C_{in} can be calculated by using the following formula

$C_{in} = \frac{1}{2\pi\ R_{in}\ \ f_c}$ Where f_c is the desired cut off frequency of the High pass filter.

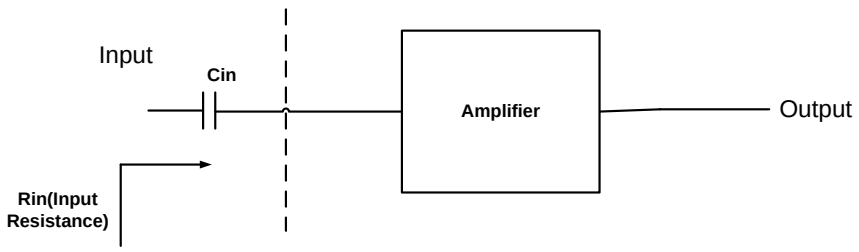

1.11.2 Bypass Capacitors

Bypass capacitors are required to remove the ac ripple on the VDD pins. The value of these capacitors depends on the length of the VDD trace. In most cases, 10µF and 0.1µF are enough to get the good performance.

1.12 Layout considerations

Good PCB layout and grounding techniques are essential to get the good audio performance. It is better to use low resistance traces as these devices are driving low impedance loads. The resistance of the traces has a significant effect on the output power delivered to the load. In order to dissipate more heat, use wide traces for the power and ground lines.

1.13 Class D without filter

The NAU8214 is designed for use without any filter on the output line. That means the outputs can be directly connected to the speaker in the simplest configuration. This type of filter less design is suitable for portable applications where the speaker is very close to the amplifier. In other words, this is preferable in applications where the length of the traces between the speaker and amplifier is short. The following diagram shows this simple configuration.

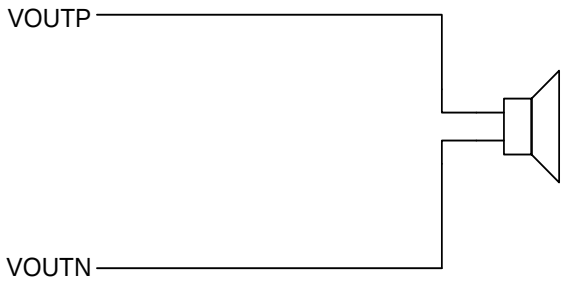

NAU8214 outputs connected to speaker without filter circuit

1.14 Class D with filter

In some applications, short trace lengths are not possible because of speaker size limitations and other layout reasons. In these applications, the long traces will cause EMI issues. There are two types of filter circuits available to reduce the EMI effects. These are ferrite bead and LC filters.

1.14.1 Ferrite Bead filter

The ferrite bead filters are used to reduce the high frequency emissions. The typical circuit diagram is shown in the figure.

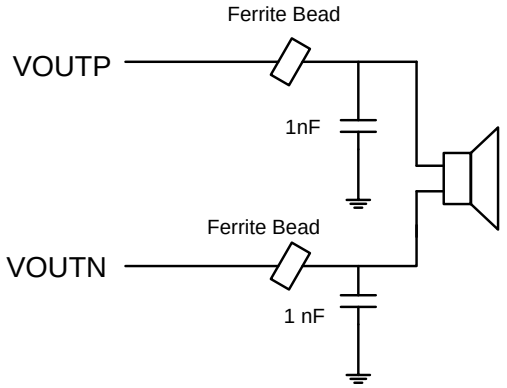

NAU8214 outputs connected to speaker with Ferrite Bead filter

The characteristic of ferrite bead is such that it offers higher impedance at high frequencies. For better EMI performance select ferrite bead which offers highest impedance at high frequencies, so that it will attenuate the signals at higher frequencies. Usually the ferrite beads have low impedance in the audio range, so it will act as a pass through filter in the audio frequency range.

1.14.2 LC filter

The LC filter is used to suppress the low frequency emissions. The following diagram shows the NAU8214 outputs connected to the speaker with LC filter circuit. R_L is the resistance of the speaker coil.

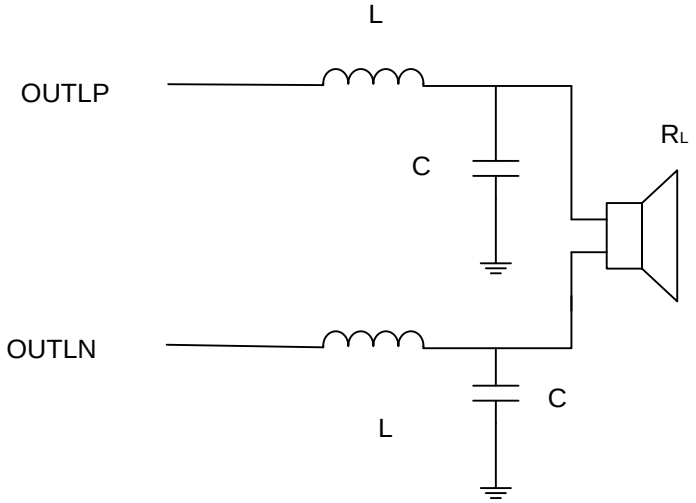

NAU8214 outputs connected to speaker with LC filter

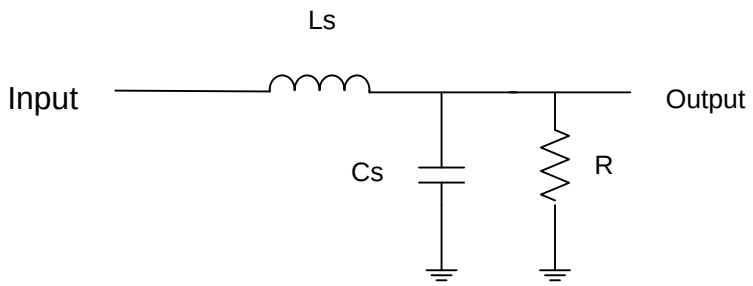

Standard Low pass LCR filter

The following are the equations for the critically damped (ζ = 0.707) standard low pass LCR filter

$$2\pi f_c = \frac{1}{\sqrt{LC}}$$ f_c is the cutoff frequency

$$\zeta = 0.707 = \frac{1}{2R} * \sqrt{\frac{L}{C}}$$

The L and C values for differential configuration can be calculated by duplicating the single ended configuration values and substituting $R_L = 2R$.

1.15 NAU8214 EMI performance

The NAU8214 includes a spread spectrum oscillator for reduced EMI. The PWM oscillator frequency typically sweeps in a range of 300 kHz +/- 15 kHz in order to spread the energy of the PWM pulses over a larger frequency band. In addition, slew rate control on the output drivers allows the application of 'filter less' loads, while suppressing EMI at high frequencies.

Package Dimensions

1.16 20 Pin QFN Package

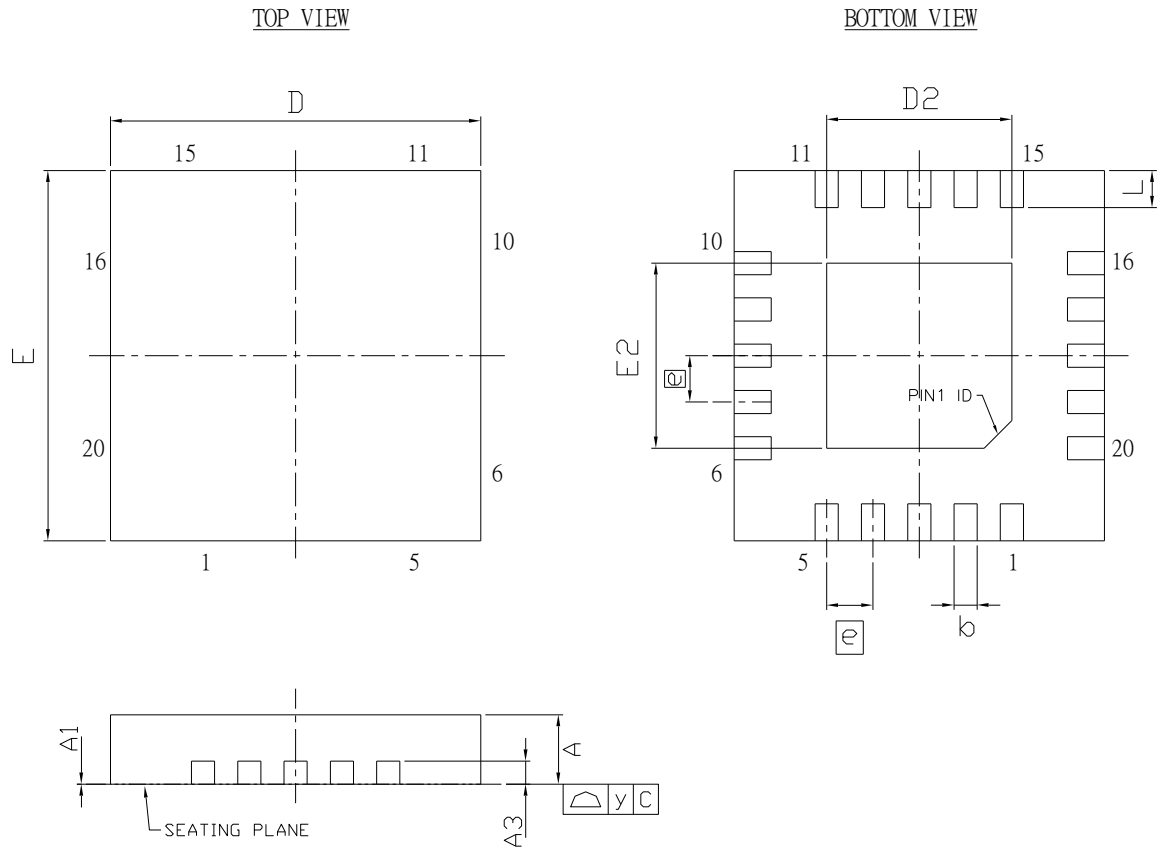

Controlling Dimension :Millimeters

SYMBOL	DIMENSION (MM)			DIMENSION (Inch)		
	MIN.	NOM.	MAX.	MIN.	NOM.	MAX.
A	0.70	0.75	0.80	0.02756	0.02953	0.03150
A1	0	0.02	0.05	0	0.0079	0.00197
A3	0.203 REF			0.0079 REF		
b	0.18	0.25	0.30	0.00709	0.00984	0.01181
D	3.90	4.00	4.10	0.1535	0.1575	0.1614
D2	1.90	2.00	2.10	0.0748	0.0787	0.0827
E	3.90	4.00	4.10	0.1535	0.1575	0.1614
E2	1.90	2.00	2.10	0.0748	0.0787	0.0827
e	0.50 BSC			0.01969 BSC		
L	0.30	0.40	0.50	0.01181	0.01574	0.01969
y	0.08			0.00315		

Note:D2,E2 by die size difference .

1.17 8 pin SOP package

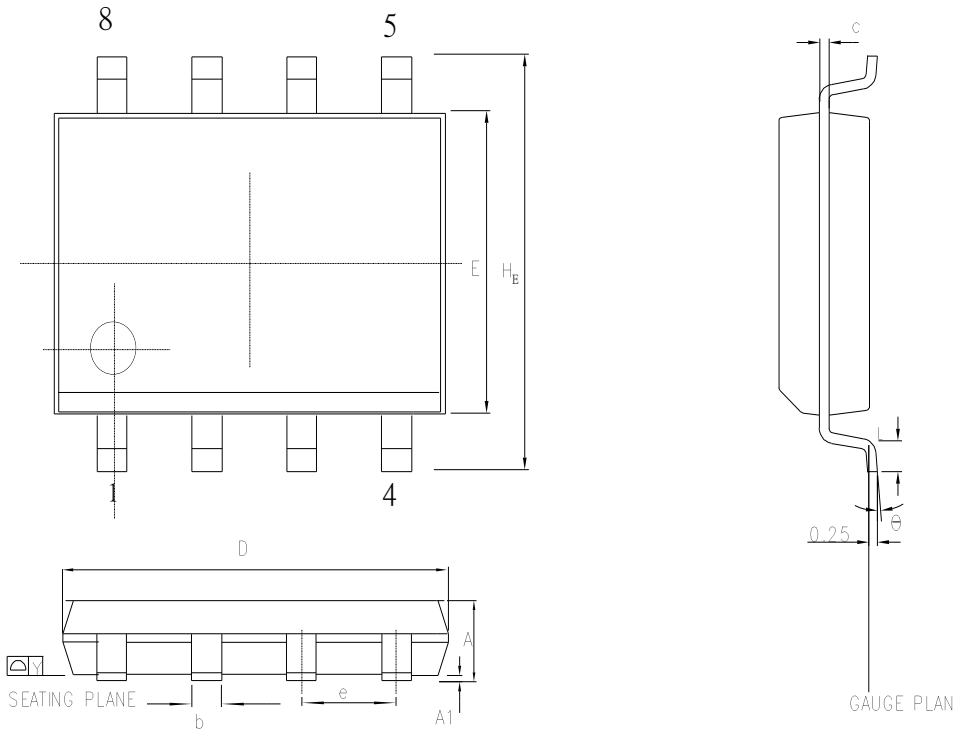

Control demensions are in milmeters .

SYMBOL	DIMENSION IN MM		DIMENSION IN INCH	
	MIN.	MAX.	MIN.	MAX.
A	1.35	1.75	0.053	0.069
A1	0.10	0.25	0.004	0.010
b	0.33	0.51	0.013	0.020
c	0.19	0.25	0.008	0.010
E	3.80	4.00	0.150	0.157
D	4.80	5.00	0.188	0.196
e	1.27 BSC		0.050 BSC	
H_E	5.80	6.20	0.228	0.244
Y	——	0.10	——	0.004
L	0.40	1.27	0.016	0.050
θ	0	10	0	10

Ordering Information

1.18 Nuvoton Part Number Description

NAU8214XG

Package Material:

G = Green Package

Package Type:

S = 8-pin SOP Package

Y = 20-pin QFN Package

Version History

VERSION	DATE	PAGE	DESCRIPTION
Rev1.0	May, 2013	NA	Preliminary Revision
Rev 1.1	May, 2013	5	Populated the Power limiting table with resistance and Vout values.
Rev1.2	November 2013	6-7	Added attack time, hold time, and release time plots PLM
Rev1.3	December 2013	2 and 12	Added new package information
Rev 1.4	August 28,2014	13	Added QFN20 Package info
Rev1.5	October 27, 2014	7-15	Added Performance graphs.
Rev 1.6	April 22, 2015	13-25	Corrected the ordering number for SOP 8 package.

Table 2 Version History

Important Notice

Nuvoton products are not designed, intended, authorized or warranted for use as components in systems or equipment intended for surgical implantation, atomic energy control instruments, airplane or spaceship instruments, transportation instruments, traffic signal instruments, combustion control instruments, or for other applications intended to support or sustain life. Furthermore, Nuvoton products are not intended for applications wherein failure of Nuvoton products could result or lead to a situation wherein personal injury, death or severe property or environmental damage could occur.

Nuvoton customers using or selling these products for use in such applications do so at their own risk and agree to fully indemnify Nuvoton for any damages resulting from such improper use or sales.