TDA2822

DUAL POWER AMPLIFIER

- SUPPLY VOLTAGE DOWN TO 3 V
- LOW CROSSOVER DISTORSION
- LOW QUIESCENT CURRENT
- BRIDGE OR STEREO CONFIGURATION

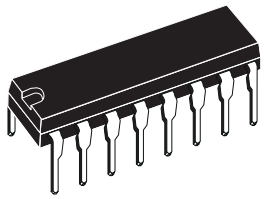

POWERDIP
(Plastic 12+2+2)

ORDERING NUMBER : TDA2822

DESCRIPTION

The TDA2822 is a monolithic integrated circuit in 12+2+2 powerdip, intended for use as dual audio power amplifier in portable radios and TS sets.

TYPICAL APPLICATION CIRCUIT (STEREO)

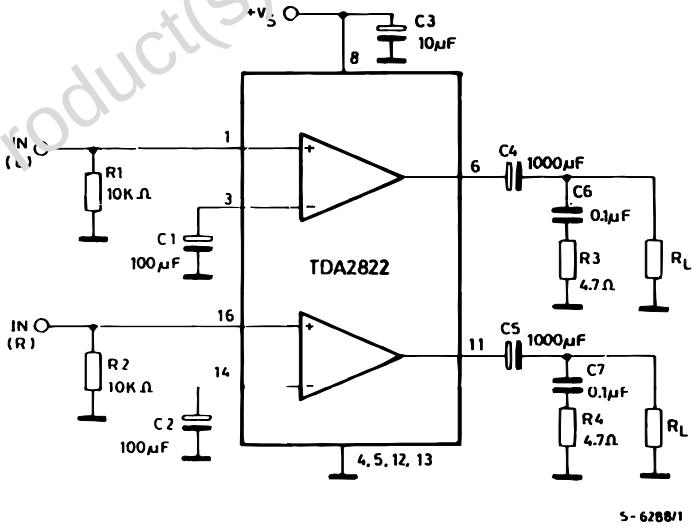

Obsolete Product(s) - Obsolete Product(s)

PIN CONNECTION (top view)

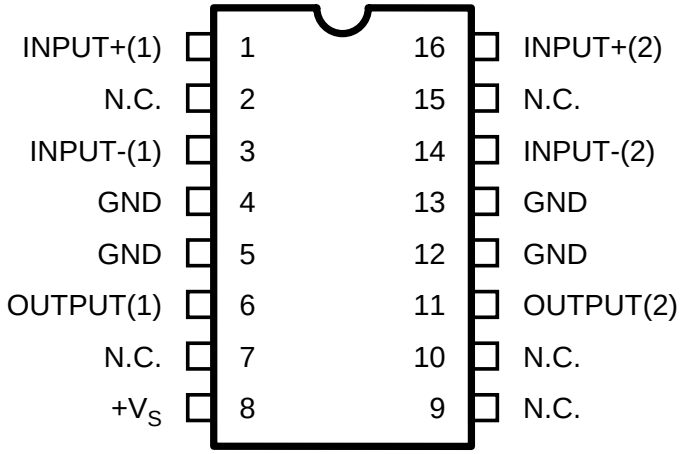

SCHEMATIC DIAGRAM

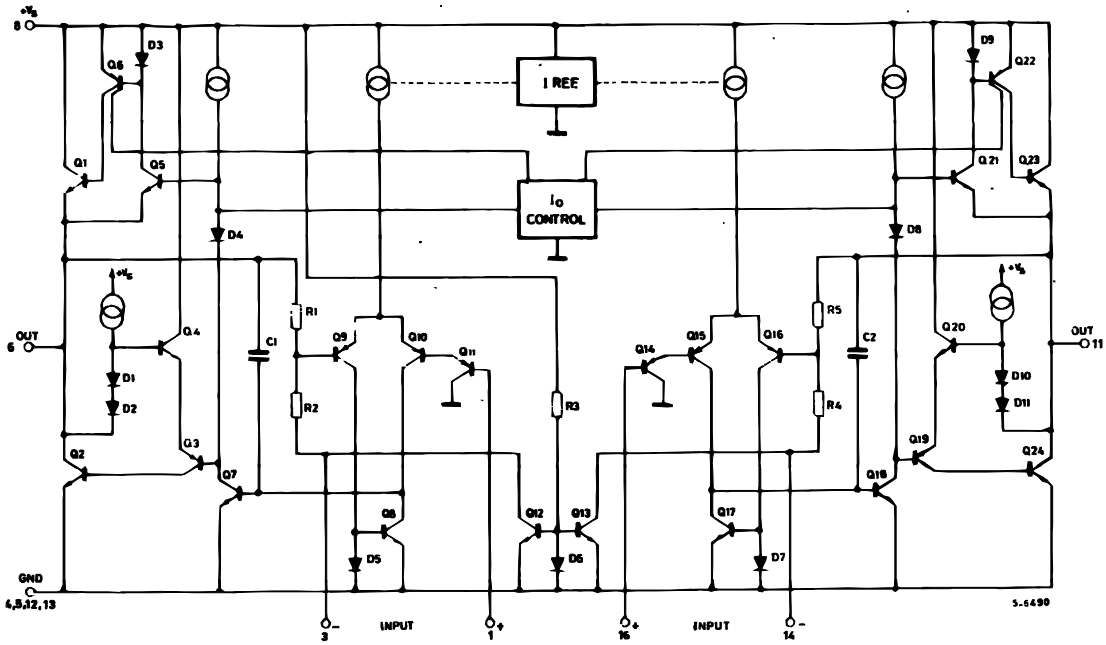

ABSOLUTE MAXIMUM RATINGS

Symbol	Parameter	Value	Unit
V_S	Supply Voltage	15	V
I_O	Output Peak Current	1.5	A
P_{tot}	Total Power Dissipation at T_{amb} = 50 °C at T_{case} = 70 °C	1.25 4	W W
T_{stg}, T_j	Storage and Junction Temperature	– 40 to 150	°C

THERMAL DATA

Symbol	Parameter		Value	Unit
$R_{th\ j\text{-}amb}$	Thermal Resistance Junction-ambient	Max	80	°C/W
$R_{th\ j\text{-}case}$	Thermal Resistance Junction-pins	Max	20	°C/W

ELECTRICAL CHARACTERISTICS (Vs = 6 V, T_{amb} = 25 °C, unless otherwise specified)
STEREO (test circuit of fig. 1)

Symbol	Parameter	Test Condition	Min.	Typ.	Max.	Unit
V_s	Supply Voltage		3		15	V
V_c	Quiescent Output Voltage	V_s = 9 V V_s = 6 V		4 2.7		V V
I_d	Quiescent Drain Current			6	12	mA
I_b	Input Bias Current			100		nA
P_o	Output Power (each channel)	d = 10 % f = 1 kHz V_s = 9 V R_L = 4 Ω V_s = 6 V R_L = 4 Ω V_s = 4.5 V R_L = 4 Ω	 1.3 0.45	 1.7 0.65 0.32		 W W W
G_v	Closed Loop Voltage Gain	f = 1 kHz	36	39	41	dB
R_i	Input Resistance	f = 1 kHz	100			kΩ
^eN	Total Input Noise	R_s = 10 kΩ B = 22 Hz to 22 kHz Curve A		 2.5 2		 µV µV
SVR	Supply Voltage Rejection	f = 100 Hz	24	30		dB
CS	Channel Separation	R_g = 10 kΩ f = 1 kHz		50		dB

V_s	Supply Voltage		3		15	V
I_d	Quiescent Drain Current	R_L = ∞		6	12	mA
V_{os}	Output Offset Voltage	R_L = 8 Ω		10	60	mV
I_b	Input Bias Current			100		nA
P_o	Output Power	d = 10 % f = 1 kHz V_s = 9 V R_L = 8 Ω V_s = 6 V R_L = 8 Ω V_s = 4.5 V R_L = 4 Ω	 2.7 0.9	 3.2 1.35 1		 W W W
d	Distortion (f = 1 kHz)	R_L = 8 Ω P_o = 0.5 W		0.2		%
G_v	Closed Loop Voltage Gain	f = 1 kHz		39		dB
R_i	Input Resistance	f = 1 kHz	100			kΩ
^eN	Total Input Noise	R_s = 10 kΩ B = 22 Hz to 22 kHz Curve A		 3 2.5		 µV µV
SVR	Supply Voltage Rejection	f = 100 Hz		40		dB

Figure 1 : Test Circuit (stereo).

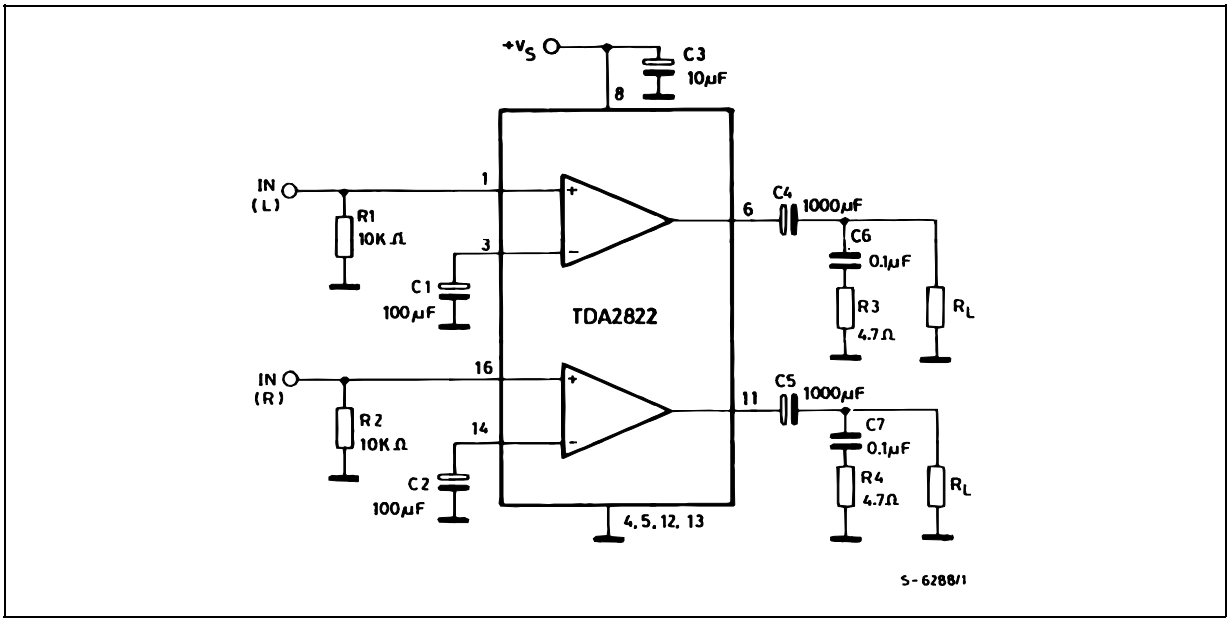

Figure 2 : P.C. Board and Components Layout of the Circuit of Figure 1 (1:1 scale).

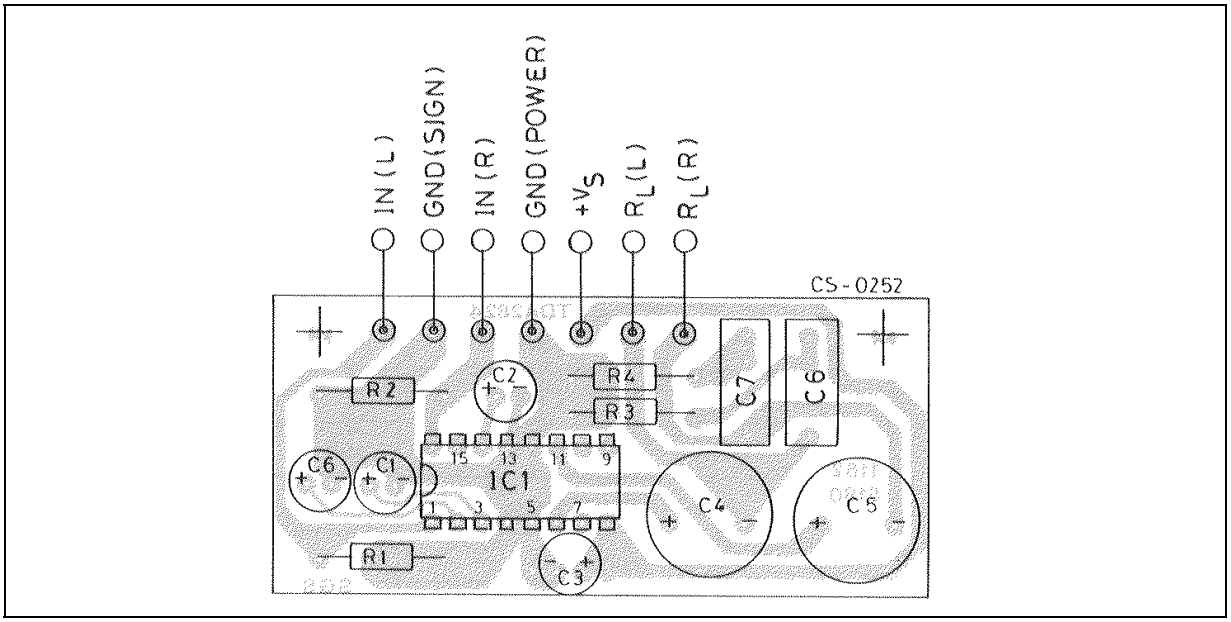

Figure 3 : Test Circuit (bridge).

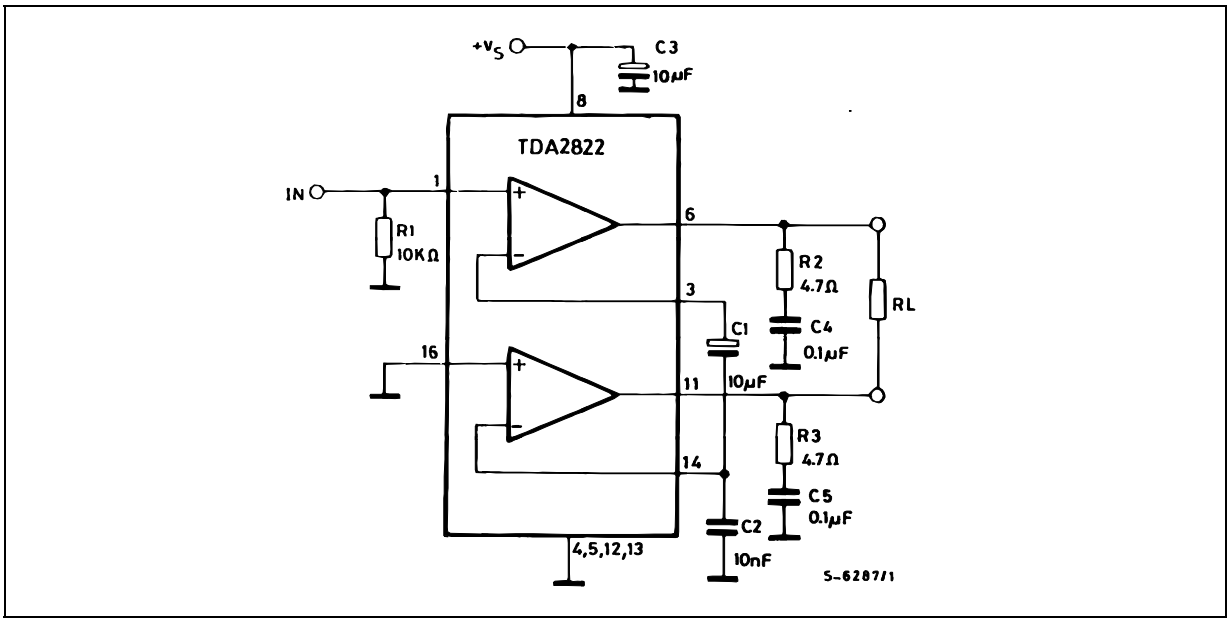

Figure 4 : P.C. Board and Components Layout of the Circuit of Figure 3 (1:1 scale).

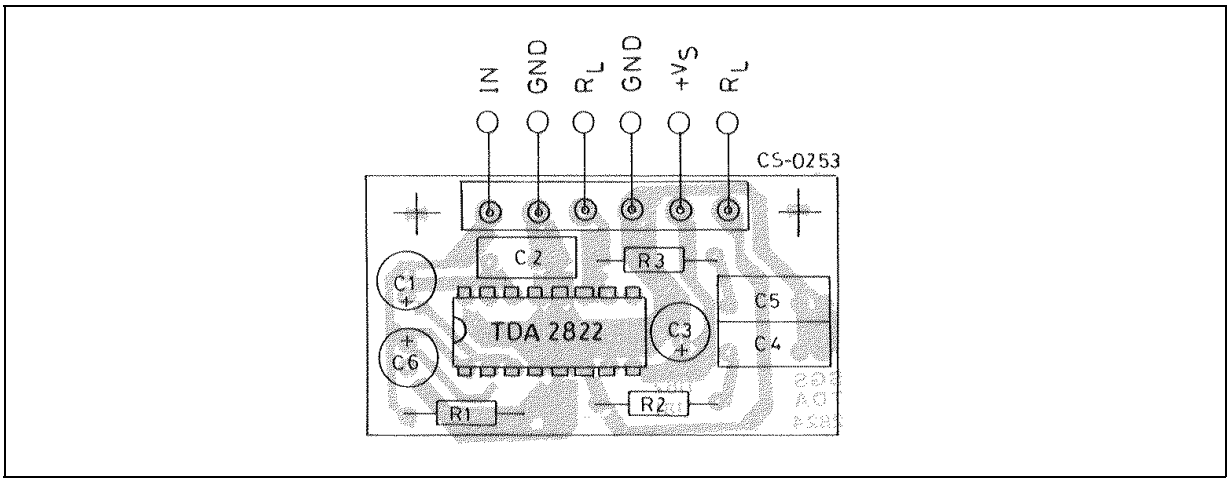

Figure 5 : Output Power vs. Supply Voltage (Stereo).

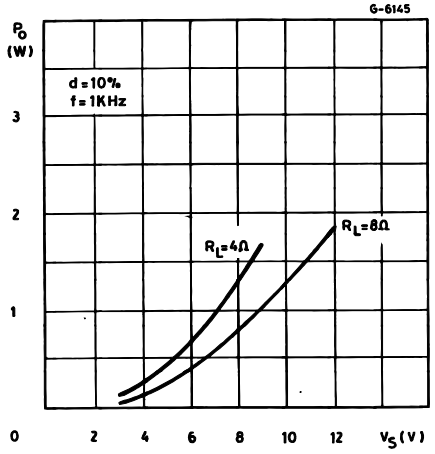

Figure 6 : Output Power vs. Supply Voltage (Bridge).

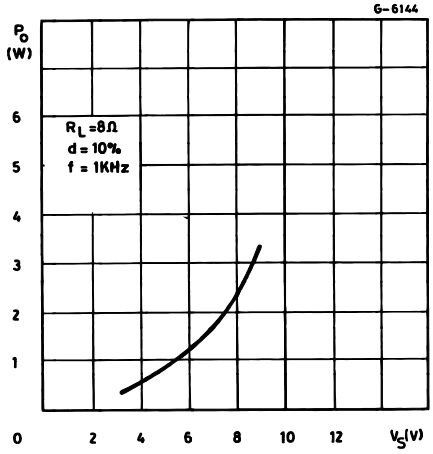

Figure 7 : Distorsion vs. Output Power (Bridge).

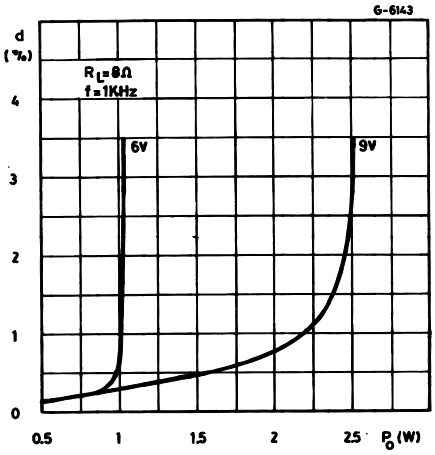

Figure 8 : Distorsion vs. Output Power (Bridge).

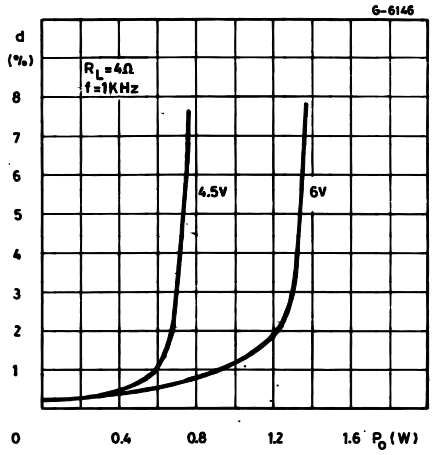

Figure 9 : Supply Voltage Rejection vs. Frequency.

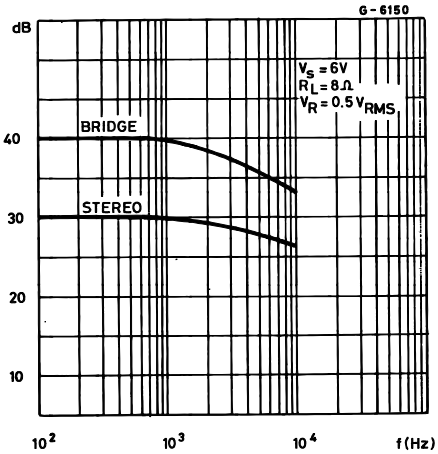

Figure 10 : Quiescent Current vs. Supply Voltage.

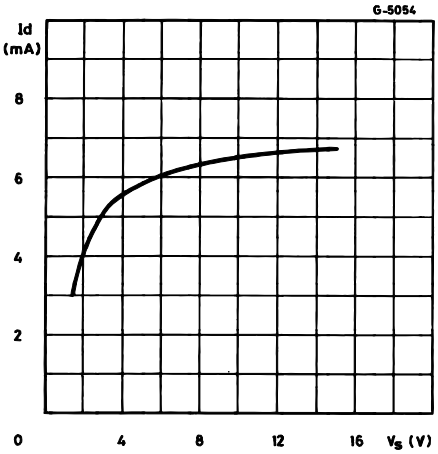

Figure 11 : Total Power Dissipation vs. Output Power (Stereo).

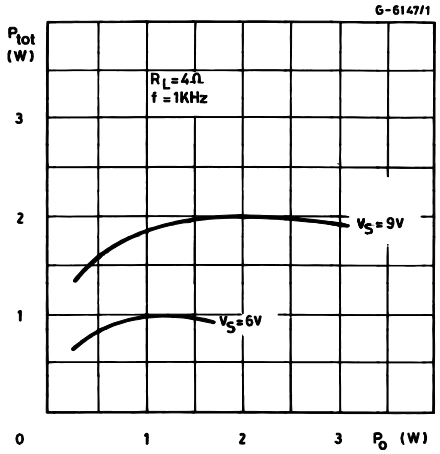

Figure 12 : Total Power Dissipation vs. Output Power (Bridge).

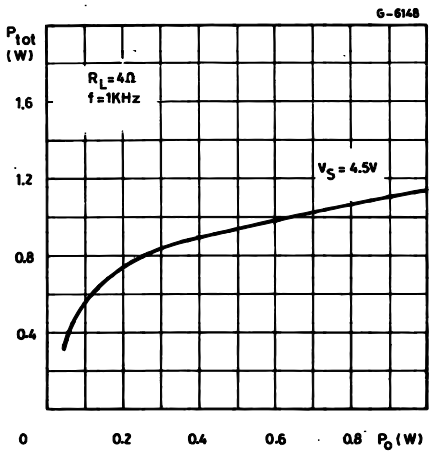

Figure 13 : Total Power Dissipation vs. Output Power (Bridge).

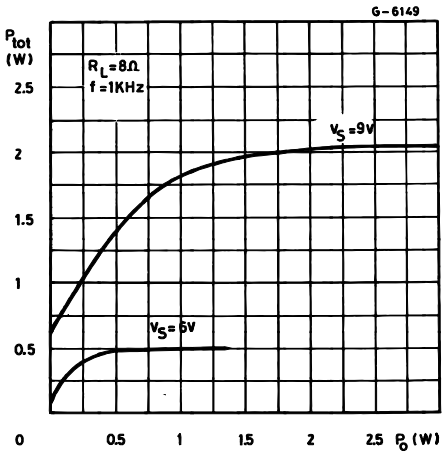

Figure 14 : Application Circuit for Portable Radios.

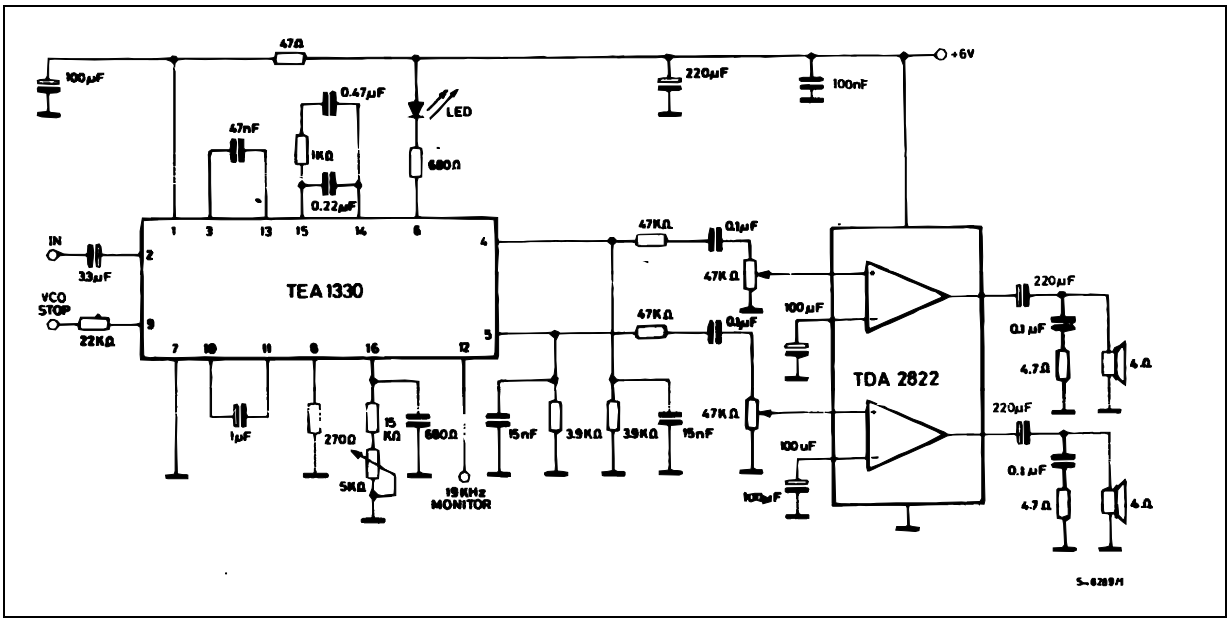

MOUNTING INSTRUCTION

The $R_{th\ j\text{-}amb}$ of the TDA2822 can be reduced by soldering the GND pins to a suitable copper area of the printed circuit board (Figure 15) or to an external heatsink (Figure 16).

The diagram of Figure 17 shows the maximum dissipable power P_{tot} and the $R_{th\ j\text{-}amb}$ as a function of the side "∂" of two equal square copper areas having a thickness of 35 µ (1.4 mils).

During soldering the pins temperature must not exceed 260 °C and the soldering time must not be longer than 12 seconds.

The external heatsink or printed circuit copper area must be connected to electrical ground.

Figure 15 : Example of P.C. Board Copper Area which is used as Heatsink.

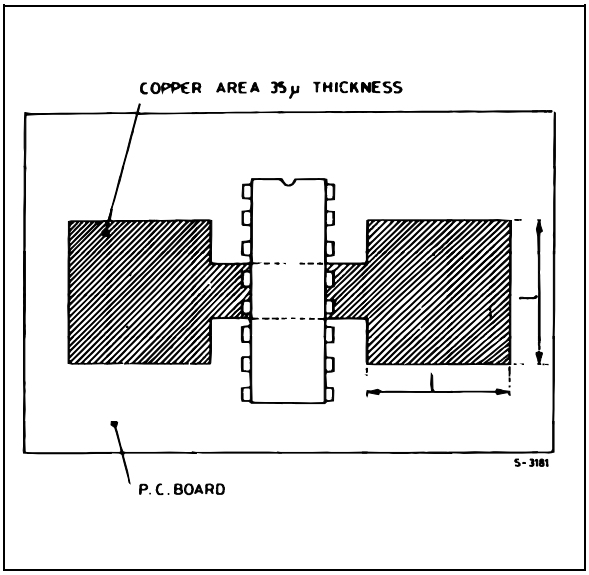

Figure 16 : External Heatsink Mounting Example.

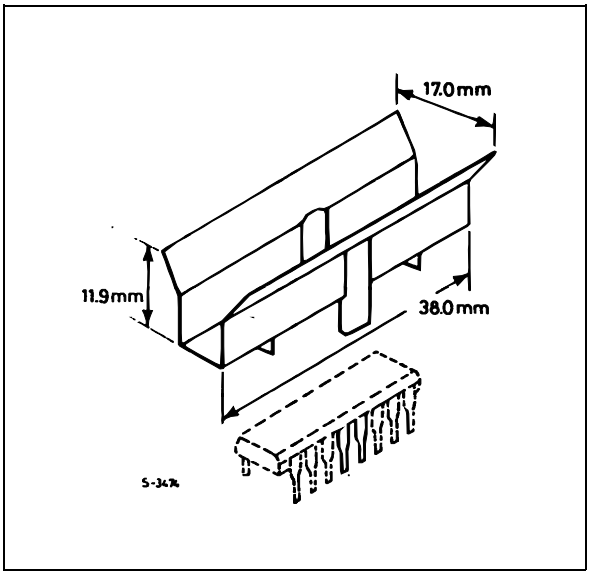

Figure 6 : Maximum Dissipable Power and Junction to Ambient Thermal Resistance vs. Side "∂".

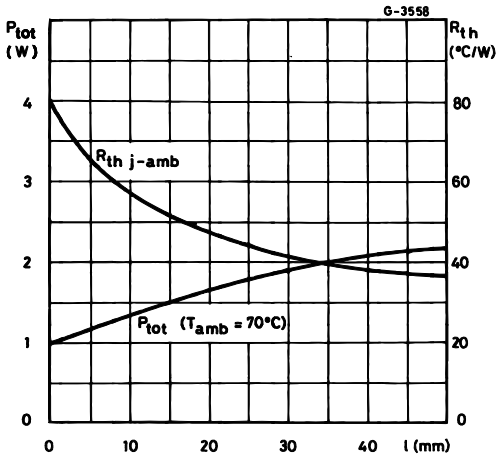

Figure 7 : Maximum Allowable Power Dissipation vs. Ambient Temperature.

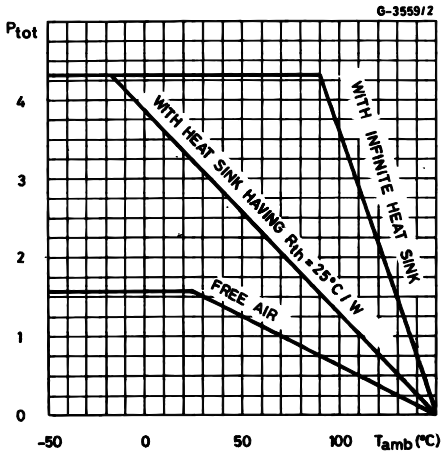

DIM.	mm			inch		
	MIN.	TYP.	MAX.	MIN.	TYP.	MAX.
a1	0.51			0.020		
B	0.85		1.40	0.033		0.055
b		0.50			0.020	
b1	0.38		0.50	0.015		0.020
D			20.0			0.787
E		8.80			0.346	
e		2.54			0.100	
e3		17.78			0.700	
F			7.10			0.280
I			5.10			0.201
L		3.30			0.130	
Z			1.27			0.050

OUTLINE AND MECHANICAL DATA

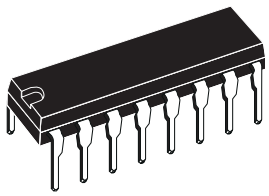

Powerdip 16

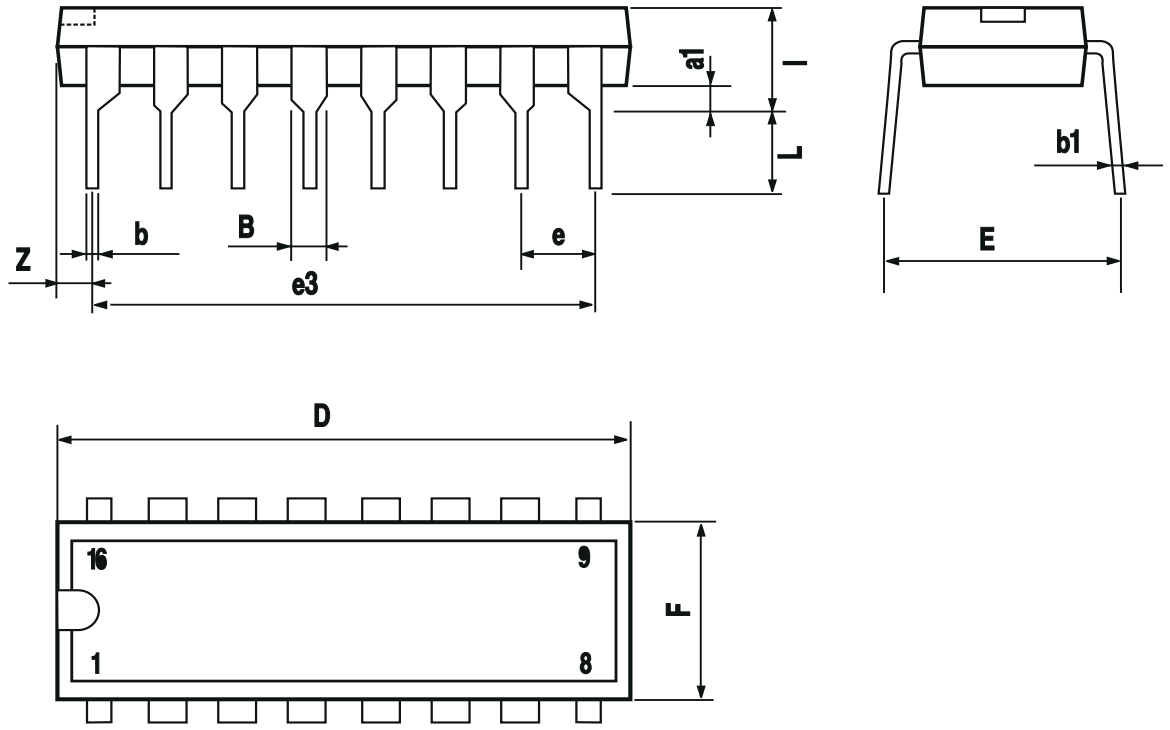

Information furnished is believed to be accurate and reliable. However, STMicroelectronics assumes no responsibility for the consequences of use of such information nor for any infringement of patents or other rights of third parties which may result from its use. No license is granted by implication or otherwise under any patent or patent rights of STMicroelectronics. Specifications mentioned in this publication are subject to change without notice. This publication supersedes and replaces all information previously supplied. STMicroelectronics products are not authorized for use as critical components in life support devices or systems without express written approval of STMicroelectronics.

The ST logo is a registered trademark of STMicroelectronics.
All other names are the property of their respective owners

© 2003 STMicroelectronics - All rights reserved

STMicroelectronics GROUP OF COMPANIES
Australia – Belgium - Brazil - Canada - China – Czech Republic - Finland - France - Germany - Hong Kong - India - Israel - Italy - Japan - Malaysia - Malta - Morocco - Singapore - Spain - Sweden - Switzerland - United Kingdom - United States
www.st.com