- **Highest-Performance Fixed-Point Digital Signal Processors (DSPs)**
  - **1.67-, 1.39-ns Instruction Cycle Time**
  - **600-, 720-MHz Clock Rate**
  - **Eight 32-Bit Instructions/Cycle**
  - **Twenty-Eight Operations/Cycle**
  - **4800, 5760 MIPS**
  - **Fully Software-Compatible With C62x™**
  - **TCI100/C6416 Pin-Compatible**
  - **Extended Temperature Devices Available**
- **VelociTI.2™ Extensions to VelociTI™ Advanced Very-Long-Instruction-Word (VLIW) TMS320C64x™ DSP Core**
  - **Eight Highly Independent Functional Units With VelociTI.2™ Extensions:**
    - **Six ALUs (32-/40-Bit), Each Supports Single 32-Bit, Dual 16-Bit, or Quad 8-Bit Arithmetic per Clock Cycle**
    - **Two Multipliers Support Four 16 x 16-Bit Multiplies (32-Bit Results) per Clock Cycle or Eight 8 x 8-Bit Multiplies (16-Bit Results) per Clock Cycle**
  - **Non-Aligned Load-Store Architecture**
  - **64 32-Bit General-Purpose Registers**
  - **Instruction Packing Reduces Code Size**
  - **All Instructions Conditional**
- **Instruction Set Features**
  - **Byte-Addressable (8-/16-/32-/64-Bit Data)**
  - **8-Bit Overflow Protection**
  - **Bit-Field Extract, Set, Clear**
  - **Normalization, Saturation, Bit-Counting**
  - **VelociTI.2™ Increased Orthogonality**
- **VCP**
  - **Supports Over 600 7.95-Kbps AMR**
  - **Programmable Code Parameters**
- **TCP**
  - **Supports up to Seven 2-Mbps 3GPP (6 Iterations)**
  - **Programmable Turbo Code and Decoding Parameters**
- **L1/L2 Memory Architecture**
  - **128K-Bit (16K-Byte) L1P Program Cache (Direct Mapped)**
  - **128K-Bit (16K-Byte) L1D Data Cache (2-Way Set-Associative)**
  - **8M-Bit (1024K-Byte) L2 Unified Mapped RAM/Cache (Flexible Allocation)**
- **Two External Memory Interfaces (EMIFs)**
  - **One 64-Bit (EMIFA), One 16-Bit (EMIFB)**
  - **Glueless Interface to Asynchronous Memories (SRAM and EPROM) and Synchronous Memories (SDRAM, SBSRAM, ZBT SRAM, and FIFO)**
  - **1280M-Byte Total Addressable External Memory Space**
- **Enhanced Direct-Memory-Access (EDMA) Controller (64 Independent Channels)**
- **Host-Port Interface (HPI)**
  - **User-Configurable Bus Width (32-/16-Bit)**
- **32-Bit/33-MHz, 3.3-V PCI Master/Slave Interface Conforms to PCI Specification 2.2**
  - **Three PCI Bus Address Registers:**
    - **Prefetchable Memory**
    - **Non-Prefetchable Memory I/O**
  - **Four-Wire Serial EEPROM Interface**
  - **PCI Interrupt Request Under DSP Program Control**
  - **DSP Interrupt Via PCI I/O Cycle**
- **Three Multichannel Buffered Serial Ports**
  - **Direct Interface to T1/E1, MVIP, SCSA Framers**
  - **Up to 256 Channels Each**
  - **ST-Bus-Switching-, AC97-Compatible**
  - **Serial Peripheral Interface (SPI) Compatible (Motorola™)**
- **Three 32-Bit General-Purpose Timers**
- **UTOPIA**
  - **UTOPIA Level 2 Slave ATM Controller**
  - **8-Bit Transmit and Receive Operations up to 50 MHz per Direction**
  - **User-Defined Cell Format up to 64 Bytes**
- **Sixteen General-Purpose I/O (GPIO) Pins**
- **Flexible PLL Clock Generator**
- **IEEE-1149.1 (JTAG†) Boundary-Scan-Compatible**
- **532-Pin Ball Grid Array (BGA) Package (GLZ, ZLZ, CLZ Suffixes), 0.8-mm Ball Pitch**
- **0.09-µm/7-Level C*u* Metal Process (CMOS)**
- **3.3-V I/Os, 1.1-V Internal (600 MHz)**
- **3.3-V I/Os, 1.2-V Internal (720 MHz)**

Please be aware that an important notice concerning availability, standard warranty, and use in critical applications of Texas Instruments semiconductor products and disclaimers thereto appears at the end of this data sheet.

C62x, VelociTI.2, VelociTI, and TMS320C64x are trademarks of Texas Instruments.
Motorola is a trademark of Motorola, Inc.
† IEEE Standard 1149.1-1990 Standard-Test-Access Port and Boundary Scan Architecture.

PRODUCTION DATA information is current as of publication date. Products conform to specifications per the terms of Texas Instruments standard warranty. Production processing does not necessarily include testing of all parameters.

Copyright © 2009, Texas Instruments Incorporated

Table of Contents

revision history 3
GLZ, ZLZ and CLZ BGA packages (bottom view) 4
description 5
device characteristics 6
functional block and CPU (DSP core) diagram 7
CPU (DSP core) description 8
memory map summary 11
peripheral register descriptions 14
EDMA channel synchronization events 27
interrupt sources and interrupt selector 29
signal groups description 31
device configurations 36
multiplexed pins 39
debugging considerations 39
terminal functions 41
development support 61
device support 62
clock PLL 65
general-purpose input/output (GPIO) 68
power-down mode logic 69
power-supply sequencing 71
power-supply decoupling 72
IEEE 1149.1 JTAG compatibility statement 72
EMIF device speed 73
bootmode 74
reset 74
absolute maximum ratings over operating case temperature range 75
recommended operating conditions 75
electrical characteristics over recommended ranges of supply voltage and operating case temperature . 76
recommended clock and control signal transition behavior 76
parameter measurement information 77
input and output clocks 79
asynchronous memory timing 83
programmable synchronous interface timing 87
synchronous DRAM timing 92
$\overline{\text{HOLD}}$/$\overline{\text{HOLDA}}$ timing 102
BUSREQ timing 103
reset timing 104
external interrupt timing 106
host-port interface (HPI) timing 107
peripheral component interconnect (PCI) timing 112
multichannel buffered serial port (McBSP) timing 115
UTOPIA slave timing 126
timer timing 129
general-purpose input/output (GPIO) port timing 130
JTAG test-port timing 131
mechanical data 132

REVISION HISTORY

This data sheet revision history highlights the technical changes made to the SPRS218H device-specific data sheet to make it an SPRS218I revision.

Scope: Applicable updates to the C64x device family, specifically relating to the TMS320TCI100 devices, have been incorporated.

PAGE NO.	ADDITIONS/CHANGES/DELETIONS
54	Updated RSV pin W25 Description in the Terminal Functions table

GLZ, ZLZ and CLZ BGA packages (bottom view)

GLZ, ZLZ and CLZ 532-PIN BALL GRID ARRAY (BGA) PACKAGES
(BOTTOM VIEW)

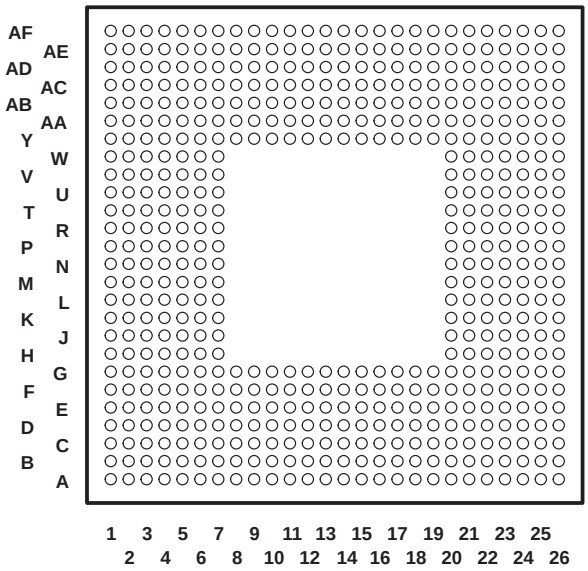

description

The TMS320C64x™ DSPs (including the TMS320TCI100 and TMS320C641xT devices) are the highest-performance fixed-point DSP generation in the TMS320C6000™ DSP platform. The TMS320C64x™ (C64x™†) device is based on the second-generation high-performance, advanced VelociTI™ very-long-instruction-word (VLIW) architecture (VelociTI.2™) developed by Texas Instruments (TI), making these DSPs an excellent choice for wireless infrastructure applications. The C64x™ is a code-compatible member of the C6000™ DSP platform.

With performance of up to 5760 million instructions per second (MIPS) at a clock rate of 720 MHz, the C64x devices offer cost-effective solutions to high-performance DSP programming challenges. The C64x DSPs possess the operational flexibility of high-speed controllers and the numerical capability of array processors. The C64x™ DSP core processor has 64 general-purpose registers of 32-bit word length and eight highly independent functional units—two multipliers for a 32-bit result and six arithmetic logic units (ALUs)— with VelociTI.2™ extensions. The VelociTI.2™ extensions in the eight functional units include new instructions to accelerate the performance in key applications and extend the parallelism of the VelociTI™ architecture. The C64x can produce four 16-bit multiply-accumulates (MACs) per cycle for a total of 2880 million MACs per second (MMACS), or eight 8-bit MACs per cycle for a total of 5760 MMACS. The C64x DSP also has application-specific hardware logic, on-chip memory, and additional on-chip peripherals similar to the other C6000™ DSP platform devices.

The TCI100 device has two high-performance embedded coprocessors [Viterbi Decoder Coprocessor (VCP) and Turbo Decoder Coprocessor (TCP)] that significantly speed up channel-decoding operations on-chip. The VCP operating at CPU clock divided-by-4 can decode over 600 7.95-Kbps adaptive multi-rate (AMR) [K = 9, R = 1/3] voice channels. The VCP supports constraint lengths K = 5, 6, 7, 8, and 9, rates R = 1/2, 1/3, and 1/4, and flexible polynomials, while generating hard decisions or soft decisions. The TCP operating at CPU clock divided-by-2 can decode up to thirty-six 384-Kbps or seven 2-Mbps turbo encoded channels (assuming 6 iterations). The TCP implements the max*log-map algorithm and is designed to support all polynomials and rates required by Third-Generation Partnership Projects (3GPP and 3GPP2), with fully programmable frame length and turbo interleaver. Decoding parameters such as the number of iterations and stopping criteria are also programmable. Communications between the VCP/TCP and the CPU are carried out through the EDMA controller.

The C64x uses a two-level cache-based architecture and has a powerful and diverse set of peripherals. The Level 1 program cache (L1P) is a 128-Kbit direct mapped cache and the Level 1 data cache (L1D) is a 128-Kbit 2-way set-associative cache. The Level 2 memory/cache (L2) consists of an 8-Mbit memory space that is shared between program and data space. L2 memory can be configured as mapped memory or combinations of cache (up to 256K bytes) and mapped memory. The peripheral set includes three multichannel buffered serial ports (McBSPs); an 8-bit Universal Test and Operations PHY Interface for Asynchronous Transfer Mode (ATM) Slave [UTOPIA Slave] port; three 32-bit general-purpose timers; a user-configurable 16-bit or 32-bit host-port interface (HPI16/HPI32); a peripheral component interconnect (PCI); a general-purpose input/output port (GPIO) with 16 GPIO pins; and two glueless external memory interfaces (64-bit EMIFA and 16-bit EMIFB‡), both of which are capable of interfacing to synchronous and asynchronous memories and peripherals.

The C64x has a complete set of development tools which includes: an advanced C compiler with C64x-specific enhancements, an assembly optimizer to simplify programming and scheduling, and a Windows™ debugger interface for visibility into source code execution.

TMS320C6000, C64x, and C6000 are trademarks of Texas Instruments.
Windows is a registered trademark of the Microsoft Corporation.
Other trademarks are the property of their respective owners.

† Throughout the remainder of this document, the TMS320TCI100 shall be referred to as TMS320C64x or C64x where generic, and where specific, individual full device part numbers (i.e., TMS320TCI100) will be used or abbreviated as TCI100.

‡ These C64x™ devices have two EMIFs (64-bit EMIFA and 16-bit EMIFB). The prefix “A” in front of a signal name indicates it is an EMIFA signal whereas a prefix “B” in front of a signal name indicates it is an EMIFB signal. Throughout the rest of this document, in generic EMIF areas of discussion, the prefix “A” or “B” may be omitted from the signal name.

device characteristics

Table 1 provides an overview of the TCI100 DSP. The table shows significant features of the C64x devices, including the capacity of on-chip RAM, the peripherals, the CPU frequency, and the package type with pin count.

Table 1. Characteristics of the TCI100 Processor

HARDWARE FEATURES		TCI100
Peripherals Not all peripherals pins are available at the same time. (For more details, see the Device Configuration section.) Peripheral performance is dependent on chip-level configuration.	EMIFA (64-bit bus width) (default clock source = AECLKIN)	1
	EMIFB (16-bit bus width) (default clock source = BECLKIN)	1
	EDMA (64 independent channels)	1
	HPI (32- or 16-bit user selectable)	1 (HPI16 or HPI32)
	PCI (32-bit)	1
	McBSPs (default internal clock source = CPU/4 clock frequency)	3
	UTOPIA (8-bit mode)	1
	32-Bit Timers (default internal clock source = CPU/8 clock frequency)	3
	General-Purpose Input/Output 0 (GP0)	16
Decoder Coprocessors	VCP	1
	TCP	1
On-Chip Memory	Size (Bytes)	1056K
	Organization	16K-Byte (16KB) L1 Program (L1P) Cache 16KB L1 Data (L1D) Cache 1024KB Unified Mapped RAM/Cache (L2)
CPU ID + CPU Rev ID	Control Status Register (CSR.[31:16])	0x0C01
Device_ID	Silicon Revision Identification Register (DEVICE_REV [20:16]) Address: 0x01B0 0200	DEVICE_REV[20:16] Silicon Revision 10000 or 10001 1.0 (TCI100) 10010 2.0 (TCI100)
Frequency	MHz	600, 720
Cycle Time	ns	1.67 ns (TCI100 A-600, -600)† 1.39 ns (TCI100 A-720, -720)†
Voltage	Core (V)	1.1 V (-600) 1.2 V (-720, -720)
	I/O (V)	3.3 V
PLL Options	CLKIN frequency multiplier	Bypass (x1), x6, x12
BGA Package	23 x 23 mm	532-Pin BGA (GLZ, ZLZ and CLZ)
Process Technology	µm	0.09 µm

† Note: The extended temperature devices' (A-600 and A−720) Electrical Characteristics and AC Timings are the same as those for the corresponding commercial temperature devices (e.g.-600, -720).

functional block and CPU (DSP core) diagram

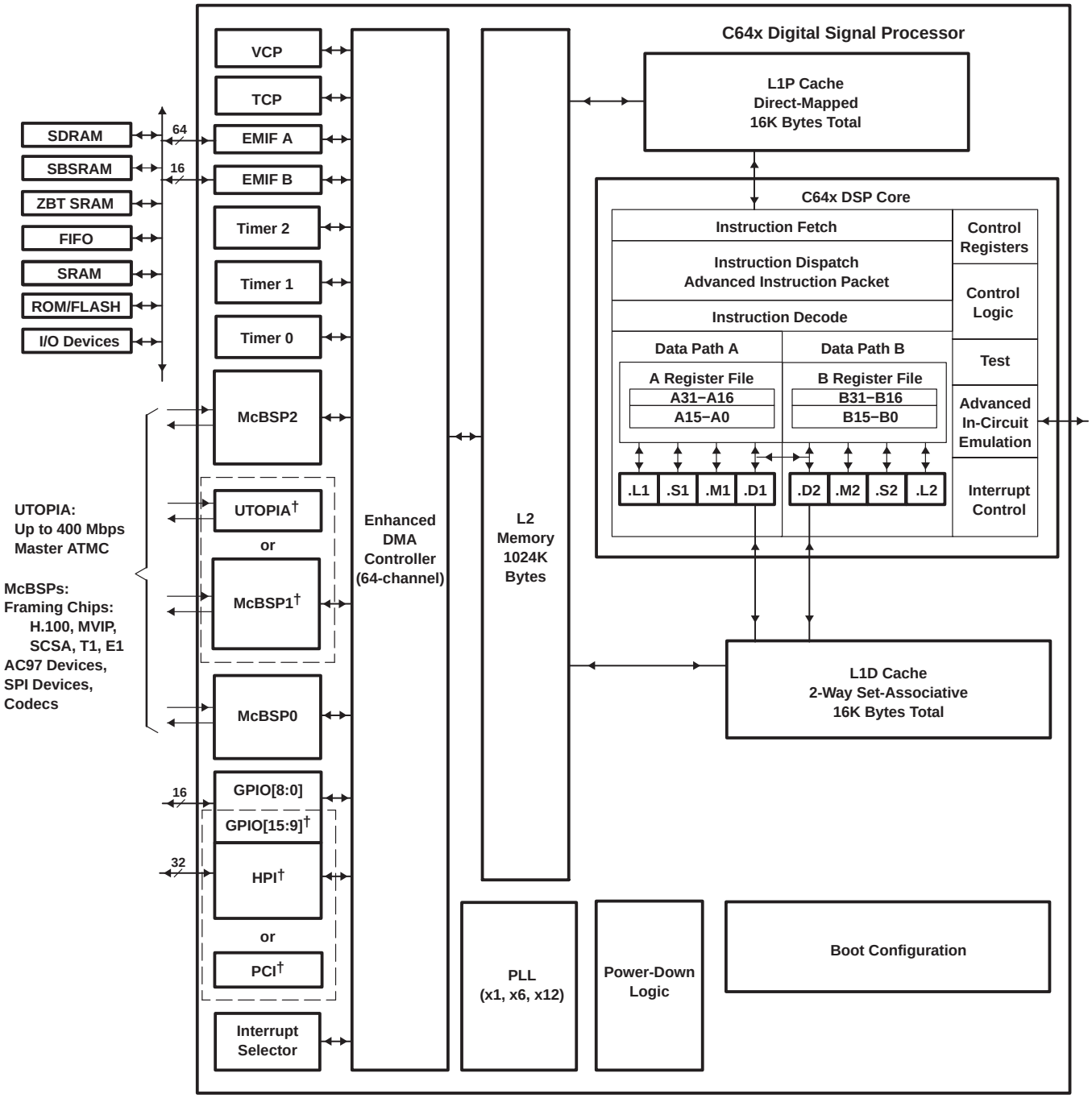

† The UTOPIA peripheral is muxed with McBSP1, and the PCI peripheral is muxed with the HPI peripheral and the GPIO[15:9] port. For more details on the multiplexed pins of these peripherals, see the Device Configurations section of this data sheet.

CPU (DSP core) description

The CPU fetches VelociTI™ advanced very-long instruction words (VLIWs) (256 bits wide) to supply up to eight 32-bit instructions to the eight functional units during every clock cycle. The VelociTI™ VLIW architecture features controls by which all eight units do not have to be supplied with instructions if they are not ready to execute. The first bit of every 32-bit instruction determines if the next instruction belongs to the same execute packet as the previous instruction, or whether it should be executed in the following clock as a part of the next execute packet. Fetch packets are always 256 bits wide; however, the execute packets can vary in size. The variable-length execute packets are a key memory-saving feature, distinguishing the C64x CPUs from other VLIW architectures. The C64x™ VelociTI.2™ extensions add enhancements to the TMS320C62x™ DSP VelociTI™ architecture. These enhancements include:

- Register file enhancements
- Data path extensions
- Quad 8-bit and dual 16-bit extensions with data flow enhancements
- Additional functional unit hardware
- Increased orthogonality of the instruction set
- Additional instructions that reduce code size and increase register flexibility

The CPU features two sets of functional units. Each set contains four units and a register file. One set contains functional units .L1, .S1, .M1, and .D1; the other set contains units .D2, .M2, .S2, and .L2. The two register files each contain 32 32-bit registers for a total of 64 general-purpose registers. In addition to supporting the packed 16-bit and 32-/40-bit fixed-point data types found in the C62x™ VelociTI™ VLIW architecture, the C64x™ register files also support packed 8-bit data and 64-bit fixed-point data types. The two sets of functional units, along with two register files, compose sides A and B of the CPU [see the functional block and CPU (DSP core) diagram, and Figure 1]. The four functional units on each side of the CPU can freely share the 32 registers belonging to that side. Additionally, each side features a “data cross path”—a single data bus connected to all the registers on the other side, by which the two sets of functional units can access data from the register files on the opposite side. The C64x CPU pipelines data-cross-path accesses over multiple clock cycles. This allows the same register to be used as a data-cross-path operand by multiple functional units in the same execute packet. All functional units in the C64x CPU can access operands via the data cross path. Register access by functional units on the same side of the CPU as the register file can service all the units in a single clock cycle. On the C64x CPU, a delay clock is introduced whenever an instruction attempts to read a register via a data cross path if that register was updated in the previous clock cycle.

In addition to the C62x™ DSP fixed-point instructions, the C64x™ DSP includes a comprehensive collection of quad 8-bit and dual 16-bit instruction set extensions. These VelociTI.2™ extensions allow the C64x CPU to operate directly on packed data to streamline data flow and increase instruction set efficiency.

Another key feature of the C64x CPU is the load/store architecture, where all instructions operate on registers (as opposed to data in memory). Two sets of data-addressing units (.D1 and .D2) are responsible for all data transfers between the register files and the memory. The data address driven by the .D units allows data addresses generated from one register file to be used to load or store data to or from the other register file. The C64x .D units can load and store bytes (8 bits), half-words (16 bits), and words (32 bits) with a single instruction. And with the new data path extensions, the C64x .D unit can load and store doublewords (64 bits) with a single instruction. Furthermore, the non-aligned load and store instructions allow the .D units to access words and doublewords on any byte boundary. The C64x CPU supports a variety of indirect addressing modes using either linear- or circular-addressing with 5- or 15-bit offsets. All instructions are conditional, and most can access any one of the 64 registers. Some registers, however, are singled out to support specific addressing modes or to hold the condition for conditional instructions (if the condition is not automatically “true”).

TMS320C62x is a trademark of Texas Instruments.

CPU (DSP core) description (continued)

The two .M functional units perform all multiplication operations. Each of the C64x .M units can perform two 16 × 16-bit multiplies or four 8 × 8-bit multiplies per clock cycle. The .M unit can also perform 16 × 32-bit multiply operations, dual 16 × 16-bit multiplies with add/subtract operations, and quad 8 × 8-bit multiplies with add operations. In addition to standard multiplies, the C64x .M units include bit-count, rotate, Galois field multiplies, and bidirectional variable shift hardware.

The two .S and .L functional units perform a general set of arithmetic, logical, and branch functions with results available every clock cycle. The arithmetic and logical functions on the C64x CPU include single 32-bit, dual 16-bit, and quad 8-bit operations.

The processing flow begins when a 256-bit-wide instruction fetch packet is fetched from a program memory. The 32-bit instructions destined for the individual functional units are “linked” together by “1” bits in the least significant bit (LSB) position of the instructions. The instructions that are “chained” together for simultaneous execution (up to eight in total) compose an execute packet. A “0” in the LSB of an instruction breaks the chain, effectively placing the instructions that follow it in the next execute packet. A C64x™ DSP device enhancement now allows execute packets to cross fetch-packet boundaries. In the TMS320C62x™/TMS320C67x™ DSP devices, if an execute packet crosses the fetch-packet boundary (256 bits wide), the assembler places it in the next fetch packet, while the remainder of the current fetch packet is padded with NOP instructions. In the C64x™ DSP device, the execute boundary restrictions have been removed, thereby, eliminating all of the NOPs added to pad the fetch packet, and thus, decreasing the overall code size. The number of execute packets within a fetch packet can vary from one to eight. Execute packets are dispatched to their respective functional units at the rate of one per clock cycle and the next 256-bit fetch packet is not fetched until all the execute packets from the current fetch packet have been dispatched. After decoding, the instructions simultaneously drive all active functional units for a maximum execution rate of eight instructions every clock cycle. While most results are stored in 32-bit registers, they can be subsequently moved to memory as bytes, half-words, words, or doublewords. All load and store instructions are byte-, half-word-, word-, or doubleword-addressable.

For more details on the C64x CPU functional units enhancements, see the following documents:

The *TMS320C6000 CPU and Instruction Set Reference Guide* (literature number SPRU189)

TMS320C64x Technical Overview (literature number SPRU395)

How To Begin Development Today With the TMS320C6414, TMS320C6415, and TMS320C6416 DSPs application report (literature number SPRA718)

For more detailed information on the device compatibility, similarities/differences, and migration from a TMS320C6416 device to the TMS320TCI100 device, see the following document:

Migrating From TMS320C6416 to TMS320TCI100 application report (literature number SPRA897).

TMS320C67x is a trademark of Texas Instruments.

CPU (DSP core) description (continued)

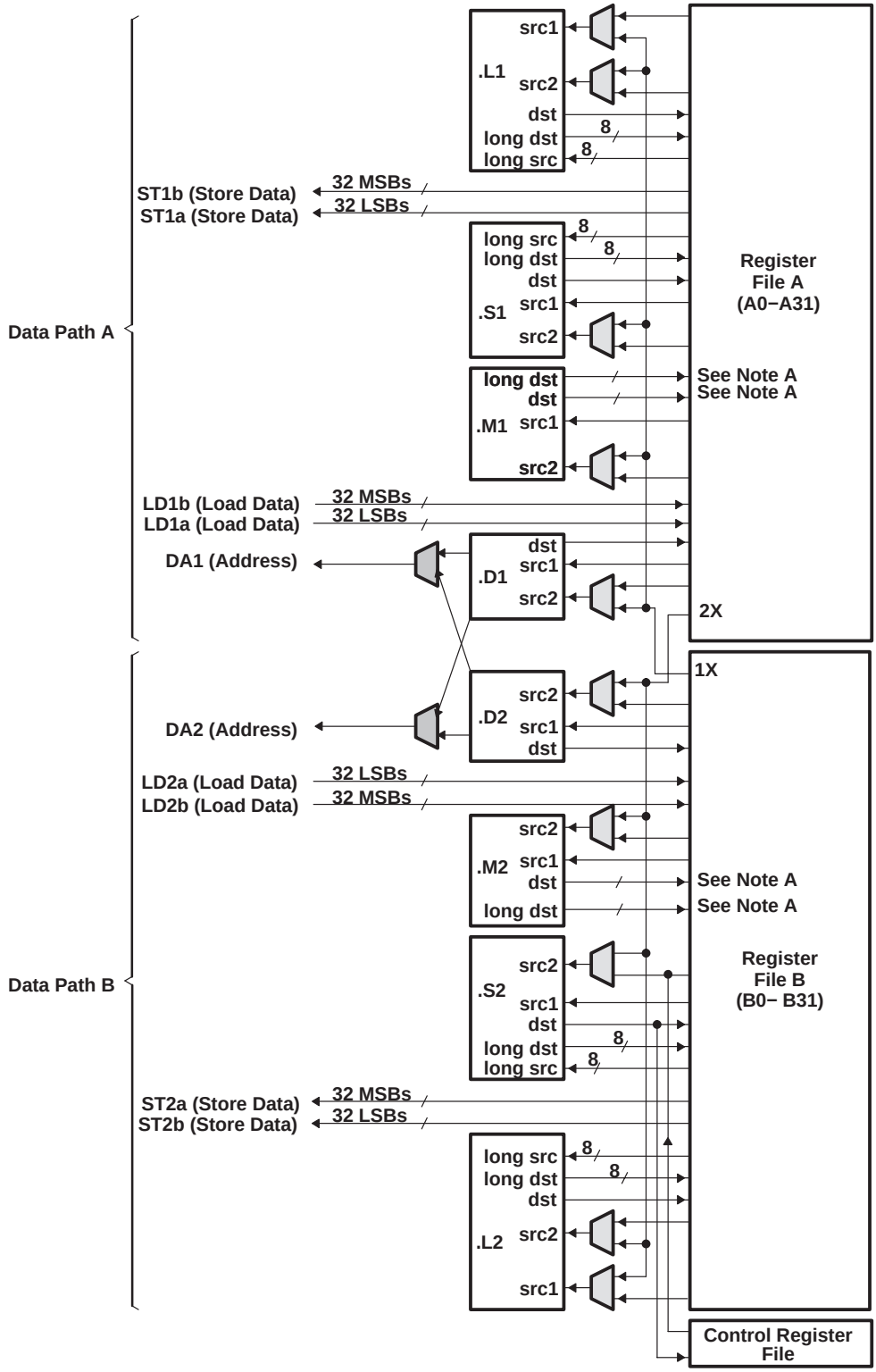

NOTE A: For the .M functional units, the long dst is 32 MSBs and the dst is 32 LSBs.

Figure 1. TMS320C64x™ CPU (DSP Core) Data Paths

memory map summary

Table 2 shows the memory map address ranges of the TMS320C64x device. Internal memory is always located at address 0 and can be used as both program and data memory. The external memory address ranges in the C64x device begin at the hex address locations 0x6000 0000 for EMIFB and 0x8000 0000 for EMIFA.

memory map summary (continued)

Table 2. TMS320C64x Memory Map Summary

MEMORY BLOCK DESCRIPTION	BLOCK SIZE (BYTES)	HEX ADDRESS RANGE
Internal RAM (L2)	1M	0000 0000 – 000F FFFF
Reserved	23M	0010 0000 – 017F FFFF
External Memory Interface A (EMIFA) Registers	256K	0180 0000 – 0183 FFFF
L2 Registers	256K	0184 0000 – 0187 FFFF
HPI Registers	256K	0188 0000 – 018B FFFF
McBSP 0 Registers	256K	018C 0000 – 018F FFFF
McBSP 1 Registers	256K	0190 0000 – 0193 FFFF
Timer 0 Registers	256K	0194 0000 – 0197 FFFF
Timer 1 Registers	256K	0198 0000 – 019B FFFF
Interrupt Selector Registers	256K	019C 0000 – 019F FFFF
EDMA RAM and EDMA Registers	256K	01A0 0000 – 01A3 FFFF
McBSP 2 Registers	256K	01A4 0000 – 01A7 FFFF
EMIFB Registers	256K	01A8 0000 – 01AB FFFF
Timer 2 Registers	256K	01AC 0000 – 01AF FFFF
GPIO Registers	256K	01B0 0000 – 01B3 FFFF
UTOPIA Registers	256K	01B4 0000 – 01B7 FFFF
TCP/VCP Registers	256K	01B8 0000 – 01BB FFFF
Reserved	256K	01BC 0000 – 01BF FFFF
PCI Registers	256K	01C0 0000 – 01C3 FFFF
Reserved	4M – 256K	01C4 0000 – 01FF FFFF
QDMA Registers	52	0200 0000 – 0200 0033
Reserved	736M – 52	0200 0034 – 2FFF FFFF
McBSP 0 Data	64M	3000 0000 – 33FF FFFF
McBSP 1 Data	64M	3400 0000 – 37FF FFFF
McBSP 2 Data	64M	3800 0000 – 3BFF FFFF
UTOPIA Queues	64M	3C00 0000 – 3FFF FFFF
Reserved	256M	4000 0000 – 4FFF FFFF
TCP/VCP	256M	5000 0000 – 5FFF FFFF
EMIFB CE0	64M	6000 0000 – 63FF FFFF
EMIFB CE1	64M	6400 0000 – 67FF FFFF
EMIFB CE2	64M	6800 0000 – 6BFF FFFF
EMIFB CE3	64M	6C00 0000 – 6FFF FFFF
Reserved	256M	7000 0000 – 7FFF FFFF
EMIFA CE0	256M	8000 0000 – 8FFF FFFF
EMIFA CE1	256M	9000 0000 – 9FFF FFFF
EMIFA CE2	256M	A000 0000 – AFFF FFFF
EMIFA CE3	256M	B000 0000 – BFFF FFFF
Reserved	1G	C000 0000 – FFFF FFFF

L2 architecture expanded

Figure 2 shows the detail of the L2 architecture on the TMS320TCI100 device. For more information on the L2MODE bits, see the cache configuration (CCFG) register bit field descriptions in the *TMS320C64x Two-Level Internal Memory Reference Guide* (literature number SPRU610).

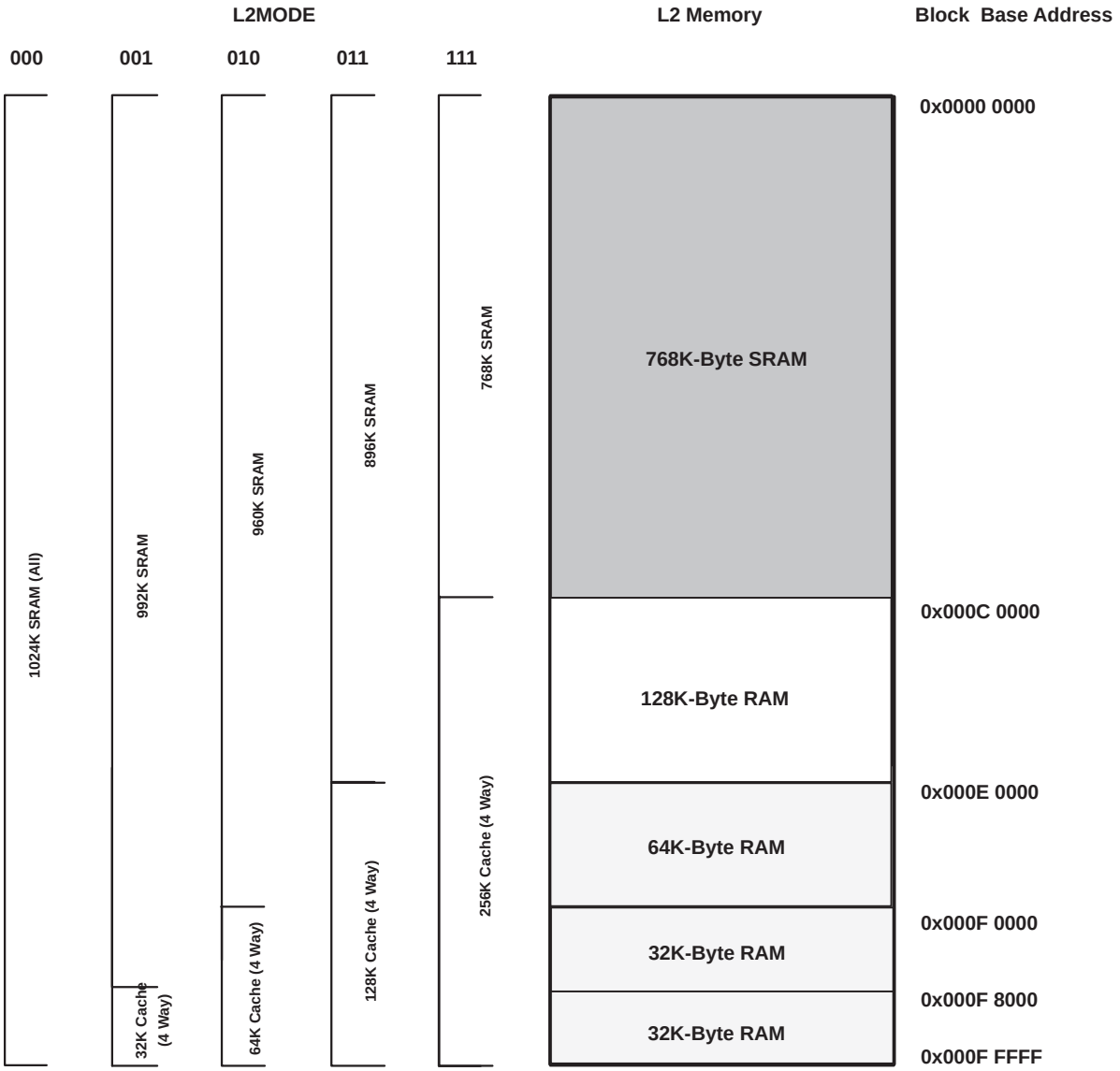

Figure 2. TMS320TCI100 L2 Architecture Memory Configuration

peripheral register descriptions

Table 3 through Table 22 identify the peripheral registers for the TCI100 devices by their register names, acronyms, and hex address or hex address range. For more detailed information on the register contents, bit names and their descriptions, see the specific peripheral reference guide listed in the *TMS320C6000 DSP Peripherals Overview Reference Guide* (literature number SPRU190).

Table 3. EMIFA Registers

HEX ADDRESS RANGE	ACRONYM	REGISTER NAME
0180 0000	GBLCTL	EMIFA global control
0180 0004	CECTL1	EMIFA CE1 space control
0180 0008	CECTL0	EMIFA CE0 space control
0180 000C	−	Reserved
0180 0010	CECTL2	EMIFA CE2 space control
0180 0014	CECTL3	EMIFA CE3 space control
0180 0018	SDCTL	EMIFA SDRAM control
0180 001C	SDTIM	EMIFA SDRAM refresh control
0180 0020	SDEXT	EMIFA SDRAM extension
0180 0024 − 0180 003C	−	Reserved
0180 0040	PDTCTL	Peripheral device transfer (PDT) control
0180 0044	CESEC1	EMIFA CE1 space secondary control
0180 0048	CESEC0	EMIFA CE0 space secondary control
0180 004C	−	Reserved
0180 0050	CESEC2	EMIFA CE2 space secondary control
0180 0054	CESEC3	EMIFA CE3 space secondary control
0180 0058 − 0183 FFFF	–	Reserved

Table 4. EMIFB Registers

HEX ADDRESS RANGE	ACRONYM	REGISTER NAME
01A8 0000	GBLCTL	EMIFB global control
01A8 0004	CECTL1	EMIFB CE1 space control
01A8 0008	CECTL0	EMIFB CE0 space control
01A8 000C	−	Reserved
01A8 0010	CECTL2	EMIFB CE2 space control
01A8 0014	CECTL3	EMIFB CE3 space control
01A8 0018	SDCTL	EMIFB SDRAM control
01A8 001C	SDTIM	EMIFB SDRAM refresh control
01A8 0020	SDEXT	EMIFB SDRAM extension
01A8 0024 − 01A8 003C	−	Reserved
01A8 0040	PDTCTL	Peripheral device transfer (PDT) control
01A8 0044	CESEC1	EMIFB CE1 space secondary control
01A8 0048	CESEC0	EMIFB CE0 space secondary control
01A8 004C	−	Reserved
01A8 0050	CESEC2	EMIFB CE2 space secondary control
01A8 0054	CESEC3	EMIFB CE3 space secondary control
01A8 0058 − 01AB FFFF	–	Reserved

peripheral register descriptions (continued)

Table 5. L2 Cache Registers

HEX ADDRESS RANGE	ACRONYM	REGISTER NAME	COMMENTS
0184 0000	CCFG	Cache configuration register	
0184 0004 − 0184 0FFC	−	Reserved	
0184 1000	EDMAWEIGHT	L2 EDMA access control register	
0184 1004 − 0184 1FFC	−	Reserved	
0184 2000	L2ALLOC0	L2 allocation register 0	
0184 2004	L2ALLOC1	L2 allocation register 1	
0184 2008	L2ALLOC2	L2 allocation register 2	
0184 200C	L2ALLOC3	L2 allocation register 3	
0184 2010 − 0184 3FFC	−	Reserved	
0184 4000	L2WBAR	L2 writeback base address register	
0184 4004	L2WWC	L2 writeback word count register	
0184 4010	L2WIBAR	L2 writeback invalidate base address register	
0184 4014	L2WIWC	L2 writeback invalidate word count register	
0184 4018	L2IBAR	L2 invalidate base address register	
0184 401C	L2IWC	L2 invalidate word count register	
0184 4020	L1PIBAR	L1P invalidate base address register	
0184 4024	L1PIWC	L1P invalidate word count register	
0184 4030	L1DWIBAR	L1D writeback invalidate base address register	
0184 4034	L1DWIWC	L1D writeback invalidate word count register	
0184 4038 − 0184 4044	−	Reserved	
0184 4048	L1DIBAR	L1D invalidate base address register	
0184 404C	L1DIWC	L1D invalidate word count register	
0184 4050 − 0184 4FFC	−	Reserved	
0184 5000	L2WB	L2 writeback all register	
0184 5004	L2WBINV	L2 writeback invalidate all register	
0184 5008 − 0184 7FFC	−	Reserved	
0184 8000 − 0184 817C	MAR0 to MAR95	Reserved	
0184 8180	MAR96	Controls EMIFB CE0 range 6000 0000 − 60FF FFFF	
0184 8184	MAR97	Controls EMIFB CE0 range 6100 0000 − 61FF FFFF	
0184 8188	MAR98	Controls EMIFB CE0 range 6200 0000 − 62FF FFFF	
0184 818C	MAR99	Controls EMIFB CE0 range 6300 0000 − 63FF FFFF	
0184 8190	MAR100	Controls EMIFB CE1 range 6400 0000 − 64FF FFFF	
0184 8194	MAR101	Controls EMIFB CE1 range 6500 0000 − 65FF FFFF	
0184 8198	MAR102	Controls EMIFB CE1 range 6600 0000 − 66FF FFFF	
0184 819C	MAR103	Controls EMIFB CE1 range 6700 0000 − 67FF FFFF	
0184 81A0	MAR104	Controls EMIFB CE2 range 6800 0000 − 68FF FFFF	
0184 81A4	MAR105	Controls EMIFB CE2 range 6900 0000 − 69FF FFFF	
0184 81A8	MAR106	Controls EMIFB CE2 range 6A00 0000 − 6AFF FFFF	
0184 81AC	MAR107	Controls EMIFB CE2 range 6B00 0000 − 6BFF FFFF	

peripheral register descriptions (continued)

Table 5. L2 Cache Registers (Continued)

HEX ADDRESS RANGE	ACRONYM	REGISTER NAME	COMMENTS
0184 81B0	MAR108	Controls EMIFB CE3 range 6C00 0000 − 6CFF FFFF	
0184 81B4	MAR109	Controls EMIFB CE3 range 6D00 0000 − 6DFF FFFF	
0184 81B8	MAR110	Controls EMIFB CE3 range 6E00 0000 − 6EFF FFFF	
0184 81BC	MAR111	Controls EMIFB CE3 range 6F00 0000 − 6FFF FFFF	
0184 81C0 − 0184 81FC	MAR112 to MAR127	Reserved	
0184 8200	MAR128	Controls EMIFA CE0 range 8000 0000 − 80FF FFFF	
0184 8204	MAR129	Controls EMIFA CE0 range 8100 0000 − 81FF FFFF	
0184 8208	MAR130	Controls EMIFA CE0 range 8200 0000 − 82FF FFFF	
0184 820C	MAR131	Controls EMIFA CE0 range 8300 0000 − 83FF FFFF	
0184 8210	MAR132	Controls EMIFA CE0 range 8400 0000 − 84FF FFFF	
0184 8214	MAR133	Controls EMIFA CE0 range 8500 0000 − 85FF FFFF	
0184 8218	MAR134	Controls EMIFA CE0 range 8600 0000 − 86FF FFFF	
0184 821C	MAR135	Controls EMIFA CE0 range 8700 0000 − 87FF FFFF	
0184 8220	MAR136	Controls EMIFA CE0 range 8800 0000 − 88FF FFFF	
0184 8224	MAR137	Controls EMIFA CE0 range 8900 0000 − 89FF FFFF	
0184 8228	MAR138	Controls EMIFA CE0 range 8A00 0000 − 8AFF FFFF	
0184 822C	MAR139	Controls EMIFA CE0 range 8B00 0000 − 8BFF FFFF	
0184 8230	MAR140	Controls EMIFA CE0 range 8C00 0000 − 8CFF FFFF	
0184 8234	MAR141	Controls EMIFA CE0 range 8D00 0000 − 8DFF FFFF	
0184 8238	MAR142	Controls EMIFA CE0 range 8E00 0000 − 8EFF FFFF	
0184 823C	MAR143	Controls EMIFA CE0 range 8F00 0000 − 8FFF FFFF	
0184 8240	MAR144	Controls EMIFA CE1 range 9000 0000 − 90FF FFFF	
0184 8244	MAR145	Controls EMIFA CE1 range 9100 0000 − 91FF FFFF	
0184 8248	MAR146	Controls EMIFA CE1 range 9200 0000 − 92FF FFFF	
0184 824C	MAR147	Controls EMIFA CE1 range 9300 0000 − 93FF FFFF	
0184 8250	MAR148	Controls EMIFA CE1 range 9400 0000 − 94FF FFFF	
0184 8254	MAR149	Controls EMIFA CE1 range 9500 0000 − 95FF FFFF	
0184 8258	MAR150	Controls EMIFA CE1 range 9600 0000 − 96FF FFFF	
0184 825C	MAR151	Controls EMIFA CE1 range 9700 0000 − 97FF FFFF	
0184 8260	MAR152	Controls EMIFA CE1 range 9800 0000 − 98FF FFFF	
0184 8264	MAR153	Controls EMIFA CE1 range 9900 0000 − 99FF FFFF	
0184 8268	MAR154	Controls EMIFA CE1 range 9A00 0000 − 9AFF FFFF	
0184 826C	MAR155	Controls EMIFA CE1 range 9B00 0000 − 9BFF FFFF	
0184 8270	MAR156	Controls EMIFA CE1 range 9C00 0000 − 9CFF FFFF	
0184 8274	MAR157	Controls EMIFA CE1 range 9D00 0000 − 9DFF FFFF	
0184 8278	MAR158	Controls EMIFA CE1 range 9E00 0000 − 9EFF FFFF	
0184 827C	MAR159	Controls EMIFA CE1 range 9F00 0000 − 9FFF FFFF	
0184 8280	MAR160	Controls EMIFA CE2 range A000 0000 − A0FF FFFF	
0184 8284	MAR161	Controls EMIFA CE2 range A100 0000 − A1FF FFFF	
0184 8288	MAR162	Controls EMIFA CE2 range A200 0000 − A2FF FFFF	
0184 828C	MAR163	Controls EMIFA CE2 range A300 0000 − A3FF FFFF	

peripheral register descriptions (continued)

Table 5. L2 Cache Registers (Continued)

HEX ADDRESS RANGE	ACRONYM	REGISTER NAME	COMMENTS
0184 8290	MAR164	Controls EMIFA CE2 range A400 0000 − A4FF FFFF	
0184 8294	MAR165	Controls EMIFA CE2 range A500 0000 − A5FF FFFF	
0184 8298	MAR166	Controls EMIFA CE2 range A600 0000 − A6FF FFFF	
0184 829C	MAR167	Controls EMIFA CE2 range A700 0000 − A7FF FFFF	
0184 82A0	MAR168	Controls EMIFA CE2 range A800 0000 − A8FF FFFF	
0184 82A4	MAR169	Controls EMIFA CE2 range A900 0000 − A9FF FFFF	
0184 82A8	MAR170	Controls EMIFA CE2 range AA00 0000 − AAFF FFFF	
0184 82AC	MAR171	Controls EMIFA CE2 range AB00 0000 − ABFF FFFF	
0184 82B0	MAR172	Controls EMIFA CE2 range AC00 0000 − ACFF FFFF	
0184 82B4	MAR173	Controls EMIFA CE2 range AD00 0000 − ADFF FFFF	
0184 82B8	MAR174	Controls EMIFA CE2 range AE00 0000 − AEFF FFFF	
0184 82BC	MAR175	Controls EMIFA CE2 range AF00 0000 − AFFF FFFF	
0184 82C0	MAR176	Controls EMIFA CE3 range B000 0000 − B0FF FFFF	
0184 82C4	MAR177	Controls EMIFA CE3 range B100 0000 − B1FF FFFF	
0184 82C8	MAR178	Controls EMIFA CE3 range B200 0000 − B2FF FFFF	
0184 82CC	MAR179	Controls EMIFA CE3 range B300 0000 − B3FF FFFF	
0184 82D0	MAR180	Controls EMIFA CE3 range B400 0000 − B4FF FFFF	
0184 82D4	MAR181	Controls EMIFA CE3 range B500 0000 − B5FF FFFF	
0184 82D8	MAR182	Controls EMIFA CE3 range B600 0000 − B6FF FFFF	
0184 82DC	MAR183	Controls EMIFA CE3 range B700 0000 − B7FF FFFF	
0184 82E0	MAR184	Controls EMIFA CE3 range B800 0000 − B8FF FFFF	
0184 82E4	MAR185	Controls EMIFA CE3 range B900 0000 − B9FF FFFF	
0184 82E8	MAR186	Controls EMIFA CE3 range BA00 0000 − BAFF FFFF	
0184 82EC	MAR187	Controls EMIFA CE3 range BB00 0000 − BBFF FFFF	
0184 82F0	MAR188	Controls EMIFA CE3 range BC00 0000 − BCFF FFFF	
0184 82F4	MAR189	Controls EMIFA CE3 range BD00 0000 − BDFF FFFF	
0184 82F8	MAR190	Controls EMIFA CE3 range BE00 0000 − BEFF FFFF	
0184 82FC	MAR191	Controls EMIFA CE3 range BF00 0000 − BFFF FFFF	
0184 8300 − 0184 83FC	MAR192 to MAR255	Reserved	
0184 8400 − 0187 FFFF	−	Reserved	

peripheral register descriptions (continued)

Table 6. EDMA Registers

HEX ADDRESS RANGE	ACRONYM	REGISTER NAME
01A0 FF9C	EPRH	Event polarity high register
01A0 FFA4	CIPRH	Channel interrupt pending high register
01A0 FFA8	CIERH	Channel interrupt enable high register
01A0 FFAC	CCERH	Channel chain enable high register
01A0 FFB0	ERH	Event high register
01A0 FFB4	EERH	Event enable high register
01A0 FFB8	ECRH	Event clear high register
01A0 FFBC	ESRH	Event set high register
01A0 FFC0	PQAR0	Priority queue allocation register 0
01A0 FFC4	PQAR1	Priority queue allocation register 1
01A0 FFC8	PQAR2	Priority queue allocation register 2
01A0 FFCC	PQAR3	Priority queue allocation register 3
01A0 FFDC	EPRL	Event polarity low register
01A0 FFE0	PQSR	Priority queue status register
01A0 FFE4	CIPRL	Channel interrupt pending low register
01A0 FFE8	CIERL	Channel interrupt enable low register
01A0 FFEC	CCERL	Channel chain enable low register
01A0 FFF0	ERL	Event low register
01A0 FFF4	EERL	Event enable low register
01A0 FFF8	ECRL	Event clear low register
01A0 FFFC	ESRL	Event set low register
01A1 0000 − 01A3 FFFF	–	Reserved

peripheral register descriptions (continued)

Table 7. EDMA Parameter RAM†

HEX ADDRESS RANGE	ACRONYM	REGISTER NAME	COMMENTS
01A0 0000 − 01A0 0017	−	Parameters for Event 0 (6 words)	
01A0 0018 − 01A0 002F	−	Parameters for Event 1 (6 words)	
01A0 0030 − 01A0 0047	−	Parameters for Event 2 (6 words)	
01A0 0048 − 01A0 005F	−	Parameters for Event 3 (6 words)	
01A0 0060 − 01A0 0077	−	Parameters for Event 4 (6 words)	
01A0 0078 − 01A0 008F	−	Parameters for Event 5 (6 words)	
01A0 0090 − 01A0 00A7	−	Parameters for Event 6 (6 words)	
01A0 00A8 − 01A0 00BF	−	Parameters for Event 7 (6 words)	
01A0 00C0 − 01A0 00D7	−	Parameters for Event 8 (6 words)	
01A0 00D8 − 01A0 00EF	−	Parameters for Event 9 (6 words)	
01A0 00F0 − 01A0 00107	−	Parameters for Event 10 (6 words)	
01A0 0108 − 01A0 011F	−	Parameters for Event 11 (6 words)	
01A0 0120 − 01A0 0137	−	Parameters for Event 12 (6 words)	
01A0 0138 − 01A0 014F	−	Parameters for Event 13 (6 words)	
01A0 0150 − 01A0 0167	−	Parameters for Event 14 (6 words)	
01A0 0168 − 01A0 017F	−	Parameters for Event 15 (6 words)	
01A0 0150 − 01A0 0167	−	Parameters for Event 16 (6 words)	
01A0 0168 − 01A0 017F	−	Parameters for Event 17 (6 words)	
...		...	
...		...	
01A0 05D0 − 01A0 05E7	−	Parameters for Event 62 (6 words)	
01A0 05E8 − 01A0 05FF	−	Parameters for Event 63 (6 words)	
01A0 0600 − 01A0 0617	−	Reload/link parameters for Event M (6 words)	
01A0 0618 − 01A0 062F	−	Reload/link parameters for Event N (6 words)	
...		...	
01A0 07E0 − 01A0 07F7	−	Reload/link parameters for Event Z (6 words)	
01A0 07F8 − 01A0 07FF	−	Scratch pad area (2 words)	

† The TCI100 device has twenty-one parameter sets [six (6) words each] that can be used to reload/link EDMA transfers.

Table 8. Quick DMA (QDMA) and Pseudo Registers

HEX ADDRESS RANGE	ACRONYM	REGISTER NAME
0200 0000	QOPT	QDMA options parameter register
0200 0004	QSRC	QDMA source address register
0200 0008	QCNT	QDMA frame count register
0200 000C	QDST	QDMA destination address register
0200 0010	QIDX	QDMA index register
0200 0014 − 0200 001C		Reserved
0200 0020	QSOPT	QDMA pseudo options register
0200 0024	QSSRC	QDMA pseudo source address register
0200 0028	QSCNT	QDMA pseudo frame count register
0200 002C	QSDST	QDMA pseudo destination address register
0200 0030	QSIDX	QDMA pseudo index register

peripheral register descriptions (continued)

Table 9. Interrupt Selector Registers

HEX ADDRESS RANGE	ACRONYM	REGISTER NAME	COMMENTS
019C 0000	MUXH	Interrupt multiplexer high	Selects which interrupts drive CPU interrupts 10−15 (INT10−INT15)
019C 0004	MUXL	Interrupt multiplexer low	Selects which interrupts drive CPU interrupts 4−9 (INT04−INT09)
019C 0008	EXTPOL	External interrupt polarity	Sets the polarity of the external interrupts (EXT_INT4−EXT_INT7)
019C 000C − 019C 01FF	−	Reserved	

Table 10. McBSP 0 Registers

HEX ADDRESS RANGE	ACRONYM	REGISTER NAME	COMMENTS
018C 0000	DRR0	McBSP0 data receive register via Configuration Bus	The CPU and EDMA controller can only read this register; they cannot write to it.
0x3000 0000 − 0x33FF FFFF	DRR0	McBSP0 data receive register via Peripheral Bus	
018C 0004	DXR0	McBSP0 data transmit register via Configuration Bus	
0x3000 0000 − 0x33FF FFFF	DXR0	McBSP0 data transmit register via Peripheral Bus	
018C 0008	SPCR0	McBSP0 serial port control register	
018C 000C	RCR0	McBSP0 receive control register	
018C 0010	XCR0	McBSP0 transmit control register	
018C 0014	SRGR0	McBSP0 sample rate generator register	
018C 0018	MCR0	McBSP0 multichannel control register	
018C 001C	RCERE00	McBSP0 enhanced receive channel enable register 0	
018C 0020	XCERE00	McBSP0 enhanced transmit channel enable register 0	
018C 0024	PCR0	McBSP0 pin control register	
018C 0028	RCERE10	McBSP0 enhanced receive channel enable register 1	
018C 002C	XCERE10	McBSP0 enhanced transmit channel enable register 1	
018C 0030	RCERE20	McBSP0 enhanced receive channel enable register 2	
018C 0034	XCERE20	McBSP0 enhanced transmit channel enable register 2	
018C 0038	RCERE30	McBSP0 enhanced receive channel enable register 3	
018C 003C	XCERE30	McBSP0 enhanced transmit channel enable register 3	
018C 0040 − 018F FFFF	–	Reserved	

peripheral register descriptions (continued)

Table 11. McBSP 1 Registers

HEX ADDRESS RANGE	ACRONYM	REGISTER NAME	COMMENTS
0190 0000	DRR1	McBSP1 data receive register via Configuration Bus	The CPU and EDMA controller can only read this register; they cannot write to it.
0x3400 0000 − 0x37FF FFFF	DRR1	McBSP1 data receive register via Peripheral Bus	
0190 0004	DXR1	McBSP1 data transmit register via Configuration Bus	
0x3400 0000 − 0x37FF FFFF	DXR1	McBSP1 data transmit register via Peripheral Bus	
0190 0008	SPCR1	McBSP1 serial port control register	
0190 000C	RCR1	McBSP1 receive control register	
0190 0010	XCR1	McBSP1 transmit control register	
0190 0014	SRGR1	McBSP1 sample rate generator register	
0190 0018	MCR1	McBSP1 multichannel control register	
0190 001C	RCERE01	McBSP1 enhanced receive channel enable register 0	
0190 0020	XCERE01	McBSP1 enhanced transmit channel enable register 0	
0190 0024	PCR1	McBSP1 pin control register	
0190 0028	RCERE11	McBSP1 enhanced receive channel enable register 1	
0190 002C	XCERE11	McBSP1 enhanced transmit channel enable register 1	
0190 0030	RCERE21	McBSP1 enhanced receive channel enable register 2	
0190 0034	XCERE21	McBSP1 enhanced transmit channel enable register 2	
0190 0038	RCERE31	McBSP1 enhanced receive channel enable register 3	
0190 003C	XCERE31	McBSP1 enhanced transmit channel enable register 3	
0190 0040 − 0193 FFFF	–	Reserved	

Table 12. McBSP 2 Registers

HEX ADDRESS RANGE	ACRONYM	REGISTER NAME	COMMENTS
01A4 0000	DRR2	McBSP2 data receive register via Configuration Bus	The CPU and EDMA controller can only read this register; they cannot write to it.
0x3800 0000 − 0x3BFF FFFF	DRR2	McBSP2 data receive register via Peripheral Bus	
01A4 0004	DXR2	McBSP2 data transmit register via Configuration Bus	
0x3800 0000 − 0x3BFF FFFF	DXR2	McBSP2 data transmit register via Peripheral Bus	
01A4 0008	SPCR2	McBSP2 serial port control register	
01A4 000C	RCR2	McBSP2 receive control register	
01A4 0010	XCR2	McBSP2 transmit control register	
01A4 0014	SRGR2	McBSP2 sample rate generator register	
01A4 0018	MCR2	McBSP2 multichannel control register	
01A4 001C	RCERE02	McBSP2 enhanced receive channel enable register 0	
01A4 0020	XCERE02	McBSP2 enhanced transmit channel enable register 0	
01A4 0024	PCR2	McBSP2 pin control register	
01A4 0028	RCERE12	McBSP2 enhanced receive channel enable register 1	
01A4 002C	XCERE12	McBSP2 enhanced transmit channel enable register 1	
01A4 0030	RCERE22	McBSP2 enhanced receive channel enable register 2	
01A4 0034	XCERE22	McBSP2 enhanced transmit channel enable register 2	
01A4 0038	RCERE32	McBSP2 enhanced receive channel enable register 3	
01A4 003C	XCERE32	McBSP2 enhanced transmit channel enable register 3	
01A4 0040 − 01A7 FFFF	–	Reserved	

peripheral register descriptions (continued)

Table 13. Timer 0 Registers

HEX ADDRESS RANGE	ACRONYM	REGISTER NAME	COMMENTS
0194 0000	CTL0	Timer 0 control register	Determines the operating mode of the timer, monitors the timer status, and controls the function of the TOUT pin.
0194 0004	PRD0	Timer 0 period register	Contains the number of timer input clock cycles to count. This number controls the TSTAT signal frequency.
0194 0008	CNT0	Timer 0 counter register	Contains the current value of the incrementing counter.
0194 000C − 0197 FFFF	−	Reserved	

Table 14. Timer 1 Registers

HEX ADDRESS RANGE	ACRONYM	REGISTER NAME	COMMENTS
0198 0000	CTL1	Timer 1 control register	Determines the operating mode of the timer, monitors the timer status, and controls the function of the TOUT pin.
0198 0004	PRD1	Timer 1 period register	Contains the number of timer input clock cycles to count. This number controls the TSTAT signal frequency.
0198 0008	CNT1	Timer 1 counter register	Contains the current value of the incrementing counter.
0198 000C − 019B FFFF	−	Reserved	

Table 15. Timer 2 Registers

HEX ADDRESS RANGE	ACRONYM	REGISTER NAME	COMMENTS
01AC 0000	CTL2	Timer 2 control register	Determines the operating mode of the timer, monitors the timer status, and controls the function of the TOUT pin.
01AC 0004	PRD2	Timer 2 period register	Contains the number of timer input clock cycles to count. This number controls the TSTAT signal frequency.
01AC 0008	CNT2	Timer 2 counter register	Contains the current value of the incrementing counter.
01AC 000C − 01AF FFFF	−	Reserved	

peripheral register descriptions (continued)

Table 16. HPI Registers

HEX ADDRESS RANGE	ACRONYM	REGISTER NAME	COMMENTS
−	HPID	HPI data register	Host read/write access only
0188 0000	HPIC	HPI control register	HPIC has both Host/CPU read/write access
0188 0004	HPIA (HPIAW)†	HPI address register (Write)	HPIA has both Host/CPU read/write access
0188 0008	HPIA (HPIAR)†	HPI address register (Read)	
0188 000C − 0189 FFFF	−	Reserved	
018A 0000	TRCTL	HPI transfer request control register	
018A 0004 − 018B FFFF	−	Reserved	

† Host access to the HPIA register updates both the HPIAW and HPIAR registers. The CPU can access HPIAW and HPIAR independently.

Table 17. GPIO Registers

HEX ADDRESS RANGE	ACRONYM	REGISTER NAME
01B0 0000	GPEN	GPIO enable register
01B0 0004	GPDIR	GPIO direction register
01B0 0008	GPVAL	GPIO value register
01B0 000C	−	Reserved
01B0 0010	GPDH	GPIO delta high register
01B0 0014	GPHM	GPIO high mask register
01B0 0018	GPDL	GPIO delta low register
01B0 001C	GPLM	GPIO low mask register
01B0 0020	GPGC	GPIO global control register
01B0 0024	GPPOL	GPIO interrupt polarity register
01B0 0028 − 01B0 01FF	−	Reserved
01B0 0200	DEVICE_REV	Silicon Revision Identification Register (For more details, see the device characteristics listed in Table 1.)
01B0 0204 − 01B3 FFFF	−	Reserved

peripheral register descriptions (continued)

Table 18. PCI Peripheral Registers

HEX ADDRESS RANGE	ACRONYM	REGISTER NAME
01C0 0000	RSTSRC	DSP Reset source/status register
01C0 0004	−	Reserved
01C0 0008	PCIIS	PCI interrupt source register
01C0 000C	PCIIEN	PCI interrupt enable register
01C0 0010	DSPMA	DSP master address register
01C0 0014	PCIMA	PCI master address register
01C0 0018	PCIMC	PCI master control register
01C0 001C	CDSPA	Current DSP address register
01C0 0020	CPCIA	Current PCI address register
01C0 0024	CCNT	Current byte count register
01C0 0028	−	Reserved
01C0 002C − 01C1 FFEF	–	Reserved
0x01C1 FFF0	HSR	Host status register
0x01C1 FFF4	HDCR	Host-to-DSP control register
0x01C1 FFF8	DSPP	DSP page register
0x01C1 FFFC	−	Reserved
01C2 0000	EEADD	EEPROM address register
01C2 0004	EEDAT	EEPROM data register
01C2 0008	EECTL	EEPROM control register
01C2 000C − 01C2 FFFF	–	Reserved
01C3 0000	TRCTL	PCI transfer request control register
01C3 0004 − 01C3 FFFF	–	Reserved

peripheral register descriptions (continued)

Table 19. UTOPIA

HEX ADDRESS RANGE	ACRONYM	REGISTER NAME
01B4 0000	UCR	UTOPIA control register
01B4 0004	−	Reserved
01B4 0008	−	Reserved
01B4 000C	UIER	UTOPIA interrupt enable register
01B4 0010	UIPR	UTOPIA interrupt pending register
01B4 0014	CDR	Clock detect register
01B4 0018	EIER	Error interrupt enable register
01B4 001C	EIPR	Error interrupt pending register
01B4 0020 − 01B7 FFFF	−	Reserved

Table 20. UTOPIA QUEUES

HEX ADDRESS RANGE	ACRONYM	REGISTER NAME
3C00 0000	URQ	UTOPIA receive queue
3D00 0000	UXQ	UTOPIA transmit queue
3D00 0004 − 3FFF FFFF	−	Reserved

peripheral register descriptions (continued)

Table 21. VCP Registers

EDMA BUS HEX ADDRESS RANGE	PERIPHERAL BUS HEX ADDRESS RANGE	ACRONYM	REGISTER NAME
5000 0000	01B8 0000	VCPIC0	VCP input configuration register 0
5000 0004	01B8 0004	VCPIC1	VCP input configuration register 1
5000 0008	01B8 0008	VCPIC2	VCP input configuration register 2
5000 000C	01B8 000C	VCPIC3	VCP input configuration register 3
5000 0010	01B8 0010	VCPIC4	VCP input configuration register 4
5000 0014	01B8 0014	VCPIC5	VCP input configuration register 5
5000 0040	01B8 0024	VCPOUT0	VCP output register 0
5000 0044	01B8 0028	VCPOUT1	VCP output register 1
5000 0080	−	VCPWBM	VCP branch metrics write register
5000 0088	−	VCPRDECS	VCP decisions read register
−	01B8 0018	VCPEXE	VCP execution register
−	01B8 0020	VCPEND	VCP endian register
−	01B8 0040	VCPSTAT0	VCP status register 0
−	01B8 0044	VCPSTAT1	VCP status register 1
−	01B8 0050	VCPERR	VCP error register

Table 22. TCP Registers

EDMA BUS HEX ADDRESS RANGE	PERIPHERAL BUS HEX ADDRESS RANGE	ACRONYM	REGISTER NAME
5800 0000	01BA 0000	TCPIC0	TCP input configuration register 0
5800 0004	01BA 0004	TCPIC1	TCP input configuration register 1
5800 0008	01BA 0008	TCPIC2	TCP input configuration register 2
5800 000C	01BA 000C	TCPIC3	TCP input configuration register 3
5800 0010	01BA 0010	TCPIC4	TCP input configuration register 4
5800 0014	01BA 0014	TCPIC5	TCP input configuration register 5
5800 0018	01BA 0018	TCPIC6	TCP input configuration register 6
5800 001C	01BA 001C	TCPIC7	TCP input configuration register 7
5800 0020	01BA 0020	TCPIC8	TCP input configuration register 8
5800 0024	01BA 0024	TCPIC9	TCP input configuration register 9
5800 0028	01BA 0028	TCPIC10	TCP input configuration register 10
5800 002C	01BA 002C	TCPIC11	TCP input configuration register 11
5800 0030	01BA 0030	TCPOUT	TCP output parameters register
5802 0000	−	TCPSP	TCP systematics and parities memory
5804 0000	−	TCPEXT	TCP extrinsics memory
5806 0000	−	TCPAP	TCP apriori memory
5808 0000	−	TCPINTER	TCP interleaver memory
580A 0000	−	TCPHD	TCP hard decisions memory
−	01BA 0038	TCPEXE	TCP execution register
−	01BA 0040	TCPEND	TCP endian register
−	01BA 0050	TCPERR	TCP error register
−	01BA 0058	TCPSTAT	TCP status register

EDMA channel synchronization events

The C64x EDMA supports up to 64 EDMA channels which service peripheral devices and external memory. Table 23 lists the source of C64x EDMA synchronization events associated with each of the programmable EDMA channels. For the C64x device, the association of an event to a channel is fixed; each of the EDMA channels has one specific event associated with it. These specific events are captured in the EDMA event registers (ERL, ERH) even if the events are disabled by the EDMA event enable registers (EERL, EERH). The priority of each event can be specified independently in the transfer parameters stored in the EDMA parameter RAM. For more detailed information on the EDMA module and how EDMA events are enabled, captured, processed, linked, chained, and cleared, etc., see the *TMS320C6000 DSP Enhanced Direct Memory Access (EDMA) Controller Reference Guide* (literature number SPRU234).

EDMA channel synchronization events (continued)

Table 23. TMS320C64x EDMA Channel Synchronization Events†

EDMA CHANNEL	EVENT NAME	EVENT DESCRIPTION
0	DSP_INT	HPI/PCI-to-DSP interrupt
1	TINT0	Timer 0 interrupt
2	TINT1	Timer 1 interrupt
3	SD_INTA	EMIFA SDRAM timer interrupt
4	GPINT4/EXT_INT4	GPIO event 4/External interrupt pin 4
5	GPINT5/EXT_INT5	GPIO event 5/External interrupt pin 5
6	GPINT6/EXT_INT6	GPIO event 6/External interrupt pin 6
7	GPINT7/EXT_INT7	GPIO event 7/External interrupt pin 7
8	GPINT0	GPIO event 0
9	GPINT1	GPIO event 1
10	GPINT2	GPIO event 2
11	GPINT3	GPIO event 3
12	XEVT0	McBSP0 transmit event
13	REVT0	McBSP0 receive event
14	XEVT1	McBSP1 transmit event
15	REVT1	McBSP1 receive event
16	–	None
17	XEVT2	McBSP2 transmit event
18	REVT2	McBSP2 receive event
19	TINT2	Timer 2 interrupt
20	SD_INTB	EMIFB SDRAM timer interrupt
21	–	Reserved, for future expansion
22−27	–	None
28	VCPREVT	VCP receive event
29	VCPXEVT	VCP transmit event
30	TCPREVT	TCP receive event
31	TCPXEVT	TCP transmit event
32	UREVT	UTOPIA receive event
33−39	–	None
40	UXEVT	UTOPIA transmit event
41−47	–	None
48	GPINT8	GPIO event 8
49	GPINT9	GPIO event 9
50	GPINT10	GPIO event 10
51	GPINT11	GPIO event 11
52	GPINT12	GPIO event 12
53	GPINT13	GPIO event 13
54	GPINT14	GPIO event 14
55	GPINT15	GPIO event 15
56−63	–	None

† In addition to the events shown in this table, each of the 64 channels can also be synchronized with the transfer completion or alternate transfer completion events. For more detailed information on EDMA event-transfer chaining, see the *TMS320C6000 DSP Enhanced Direct Memory Access (EDMA) Controller Reference Guide* (literature number SPRU234).

interrupt sources and interrupt selector

The C64x DSP core supports 16 prioritized interrupts, which are listed in Table 24. The highest-priority interrupt is INT_00 (dedicated to RESET) while the lowest-priority interrupt is INT_15. The first four interrupts (INT_00−INT_03) are non-maskable and fixed. The remaining interrupts (INT_04−INT_15) are maskable and default to the interrupt source specified in Table 24. The interrupt source for interrupts 4−15 can be programmed by modifying the selector value (binary value) in the corresponding fields of the Interrupt Selector Control registers: MUXH (address 0x019C0000) and MUXL (address 0x019C0004).

interrupt sources and interrupt selector (continued)

Table 24. C64x DSP Interrupts

CPU INTERRUPT NUMBER	INTERRUPT SELECTOR CONTROL REGISTER	SELECTOR VALUE (BINARY)	INTERRUPT EVENT	INTERRUPT SOURCE
INT_00†	−	−	RESET	
INT_01†	−	−	NMI	
INT_02†	−	−	Reserved	Reserved. Do not use.
INT_03†	−	−	Reserved	Reserved. Do not use.
INT_04‡	MUXL[4:0]	00100	GPINT4/EXT_INT4	GPIO interrupt 4/External interrupt pin 4
INT_05‡	MUXL[9:5]	00101	GPINT5/EXT_INT5	GPIO interrupt 5/External interrupt pin 5
INT_06‡	MUXL[14:10]	00110	GPINT6/EXT_INT6	GPIO interrupt 6/External interrupt pin 6
INT_07‡	MUXL[20:16]	00111	GPINT7/EXT_INT7	GPIO interrupt 7/External interrupt pin 7
INT_08‡	MUXL[25:21]	01000	EDMA_INT	EDMA channel (0 through 63) interrupt
INT_09‡	MUXL[30:26]	01001	EMU_DTDMA	EMU DTDMA
INT_10‡	MUXH[4:0]	00011	SD_INTA	EMIFA SDRAM timer interrupt
INT_11‡	MUXH[9:5]	01010	EMU_RTDXRX	EMU real-time data exchange (RTDX) receive
INT_12‡	MUXH[14:10]	01011	EMU_RTDXTX	EMU RTDX transmit
INT_13‡	MUXH[20:16]	00000	DSP_INT	HPI/PCI-to-DSP interrupt
INT_14‡	MUXH[25:21]	00001	TINT0	Timer 0 interrupt
INT_15‡	MUXH[30:26]	00010	TINT1	Timer 1 interrupt
−	−	01100	XINT0	McBSP0 transmit interrupt
−	−	01101	RINT0	McBSP0 receive interrupt
−	−	01110	XINT1	McBSP1 transmit interrupt
−	−	01111	RINT1	McBSP1 receive interrupt
−	−	10000	GPINT0	GPIO interrupt 0
−	−	10001	XINT2	McBSP2 transmit interrupt
−	−	10010	RINT2	McBSP2 receive interrupt
−	−	10011	TINT2	Timer 2 interrupt
−	−	10100	SD_INTB	EMIFB SDRAM timer interrupt
−	−	10101	Reserved	Reserved. Do not use.
−	−	10110	Reserved	Reserved. Do not use.
−	−	10111	UINT	UTOPIA interrupt
−	−	11000 − 11101	Reserved	Reserved. Do not use.
−	−	11110	VCPINT	VCP interrupt
−	−	11111	TCPINT	TCP interrupt

† Interrupts INT_00 through INT_03 are non-maskable and fixed.
‡ Interrupts INT_04 through INT_15 are programmable by modifying the binary selector values in the Interrupt Selector Control registers fields. Table 24 shows the default interrupt sources for Interrupts INT_04 through INT_15. For more detailed information on interrupt sources and selection, see the *TMS320C6000 DSP Interrupt Selector Reference Guide* (literature number SPRU646).

signal groups description

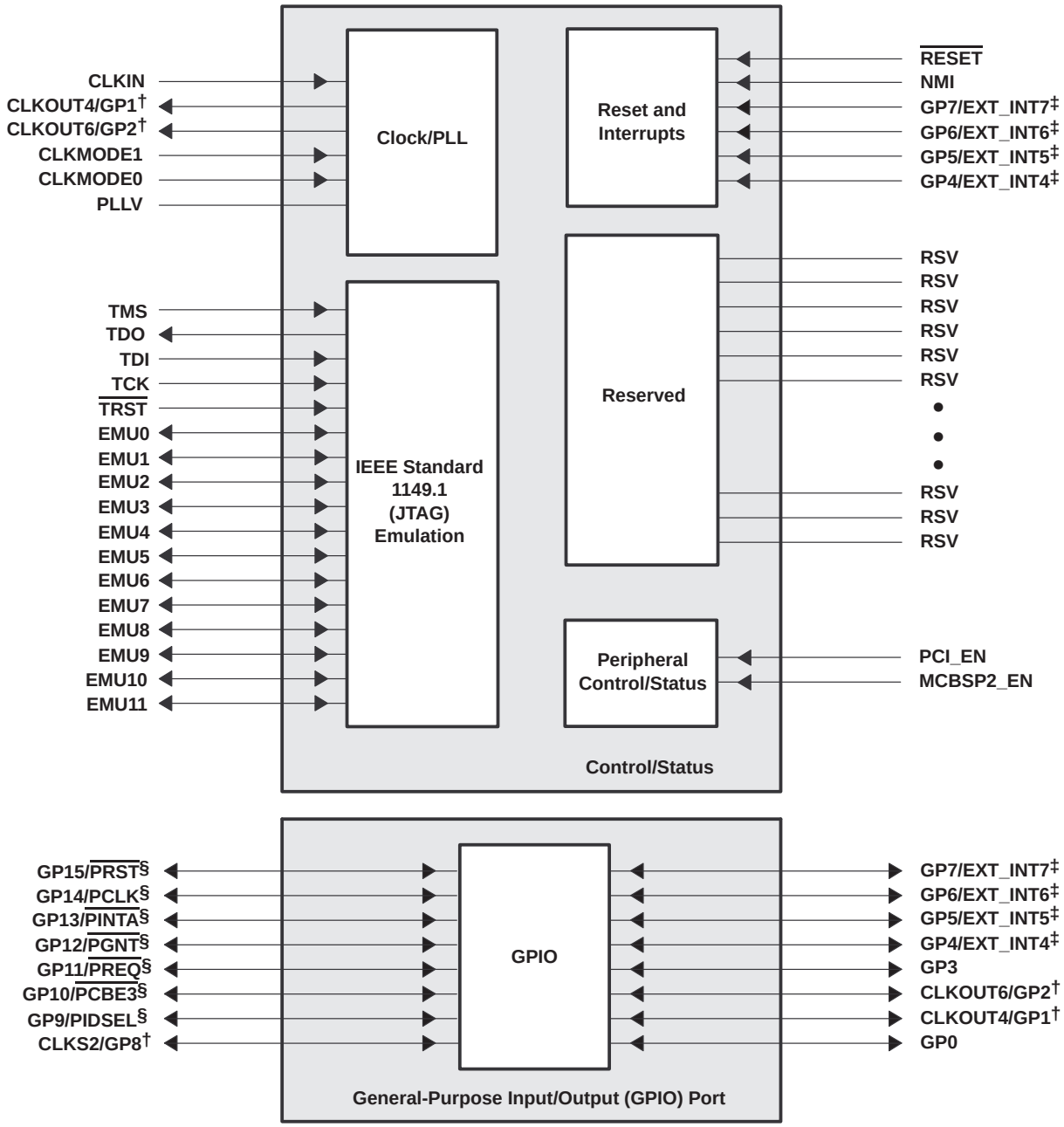

† These pins are muxed with the GPIO port pins and by default these signals function as clocks (CLKOUT4 or CLKOUT6) or McBSP2 clock source (CLKS2). To use these muxed pins as GPIO signals, the appropriate GPIO register bits (GPxEN and GPxDIR) must be properly enabled and configured. For more details, see the Device Configurations section of this data sheet.

‡ These pins are GPIO pins that can also function as external interrupt sources (EXT_INT[7:4]). Default after reset is EXT_INTx or GPIO as input-only.

§ These GPIO pins are muxed with the PCI peripheral pins. By default, these signals are set up to no function with both the GPIO and PCI pin functions *disabled*. For more details on these muxed pins, see the Device Configurations section of this data sheet.

Figure 3. CPU and Peripheral Signals

signal groups description (continued)

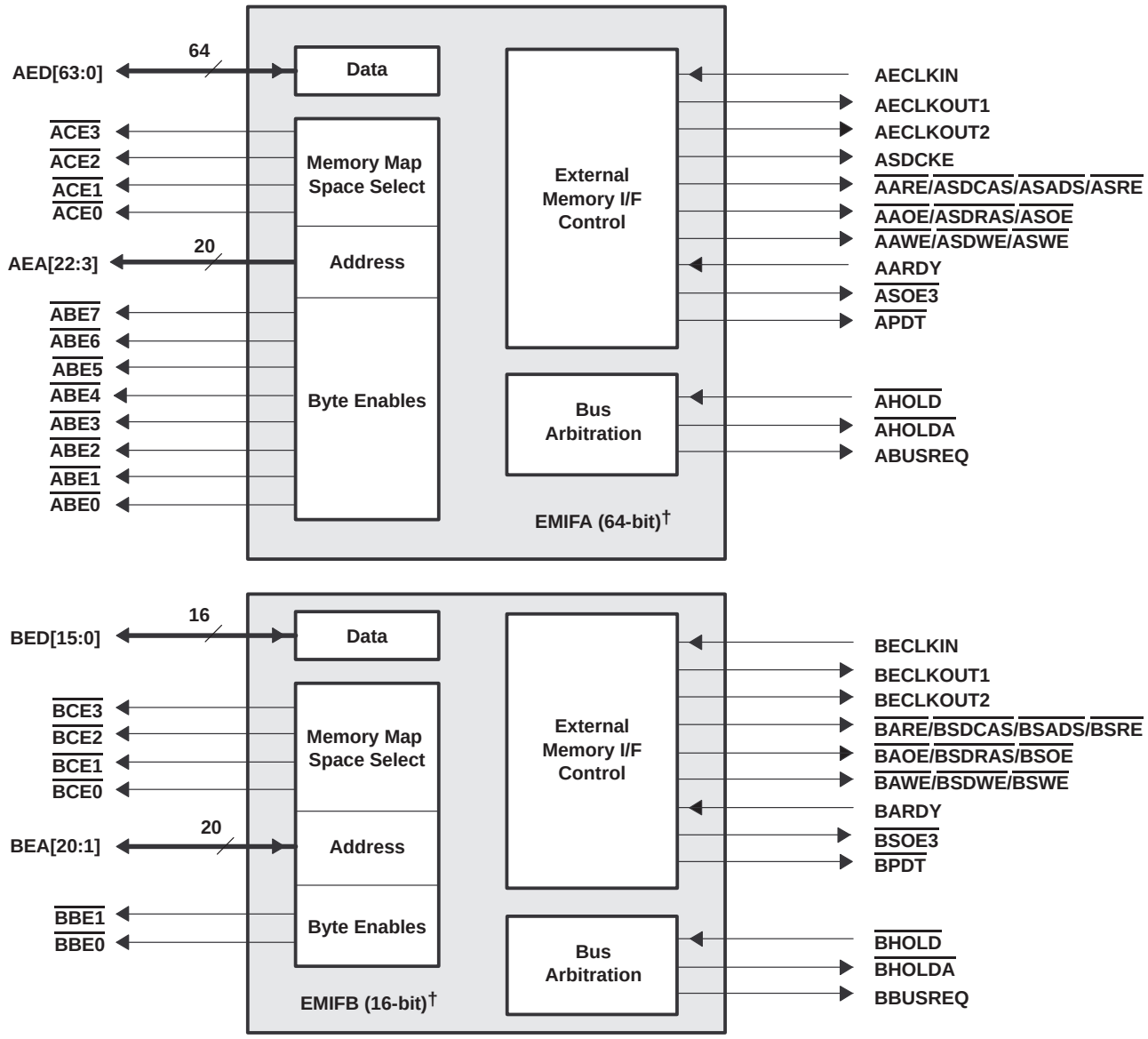

† These C64x™ devices have two EMIFs (64-bit EMIFA and 16-bit EMIFB). The prefix “A” in front of a signal name indicates it is an EMIFA signal whereas a prefix “B” in front of a signal name indicates it is an EMIFB signal. Throughout the rest of this document, in generic EMIF areas of discussion, the prefix “A” or “B” may be omitted from the signal name.

Figure 4. Peripheral Signals

signal groups description (continued)

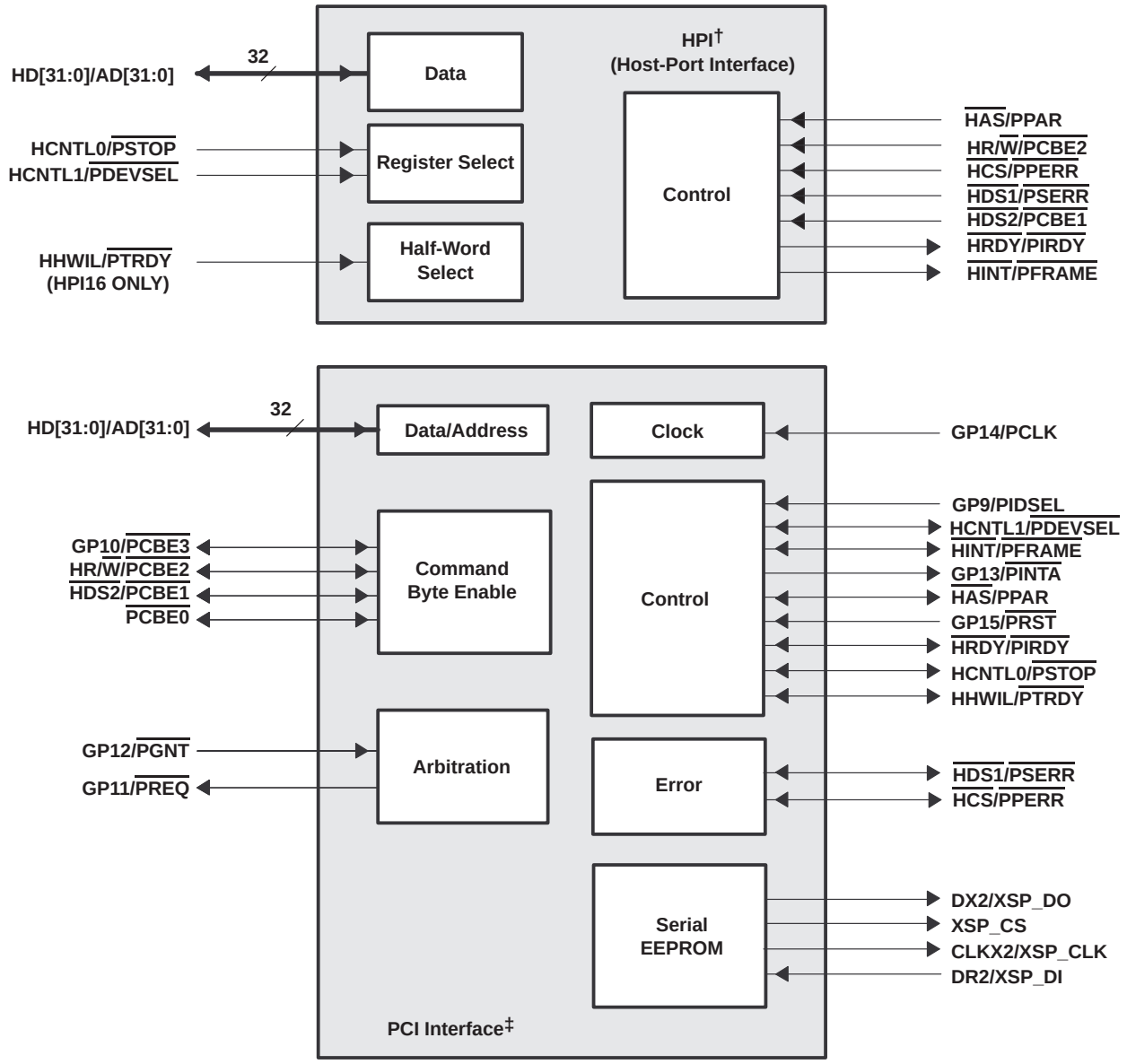

† These HPI pins are muxed with the PCI peripheral. By default, these signals function as HPI. For more details on these muxed pins, see the Device Configurations section of this data sheet.

‡ These PCI pins (excluding PCBE0 and XSP_CS) are muxed with the HPI, McBSP2, or GPIO peripherals. By default, these signals function as HPI, McBSP2, and no function, respectively. For more details on these muxed pins, see the Device Configurations section of this data sheet.

Figure 4. Peripheral Signals (Continued)

signal groups description (continued)

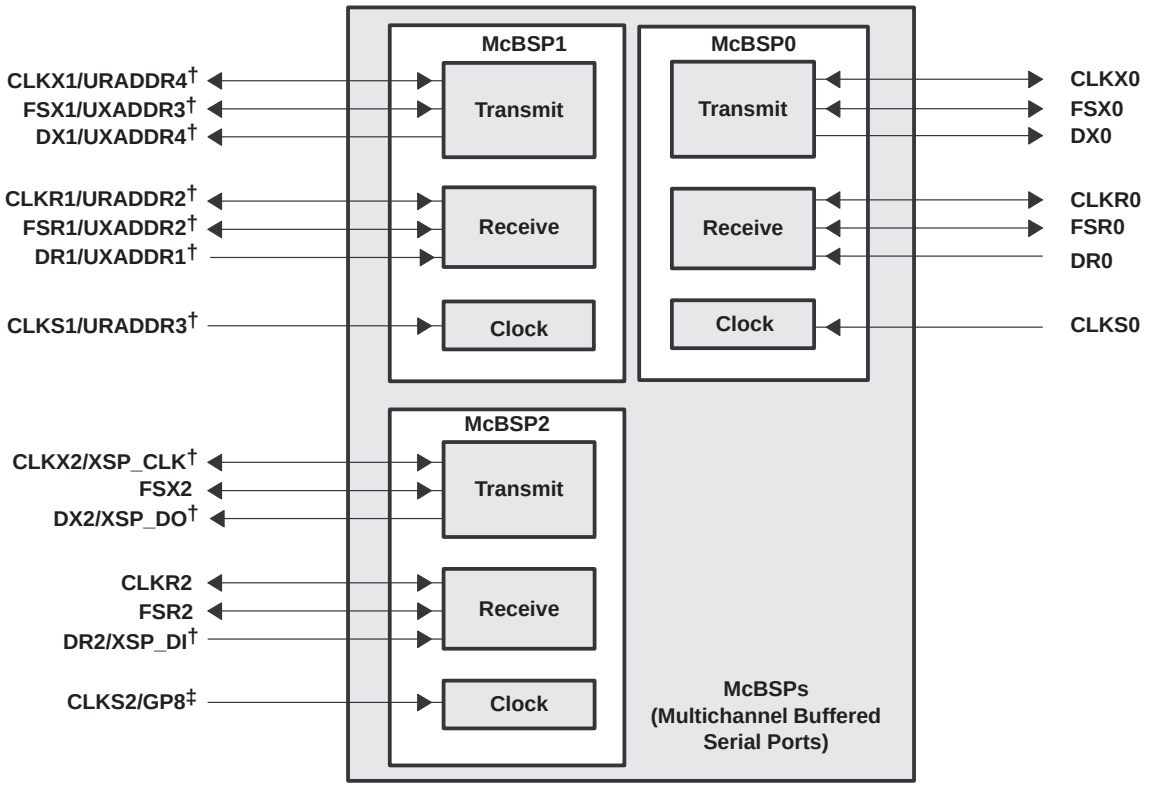

† These McBSP2 and McBSP1 pins are muxed with the PCI and UTOPIA peripherals, respectively. By default, these signals function as McBSP2 and McBSP1, respectively. For more details on these muxed pins, see the Device Configurations section of this data sheet.
‡ The McBSP2 clock source pin (CLKS2, default) is muxed with the GP8 pin. To use this muxed pin as the GP8 signal, the appropriate GPIO register bits (GP8EN and GP8DIR) must be properly enabled and configured. For more details, see the Device Configurations section of this data sheet.

Figure 4. Peripheral Signals (Continued)

signal groups description (continued)

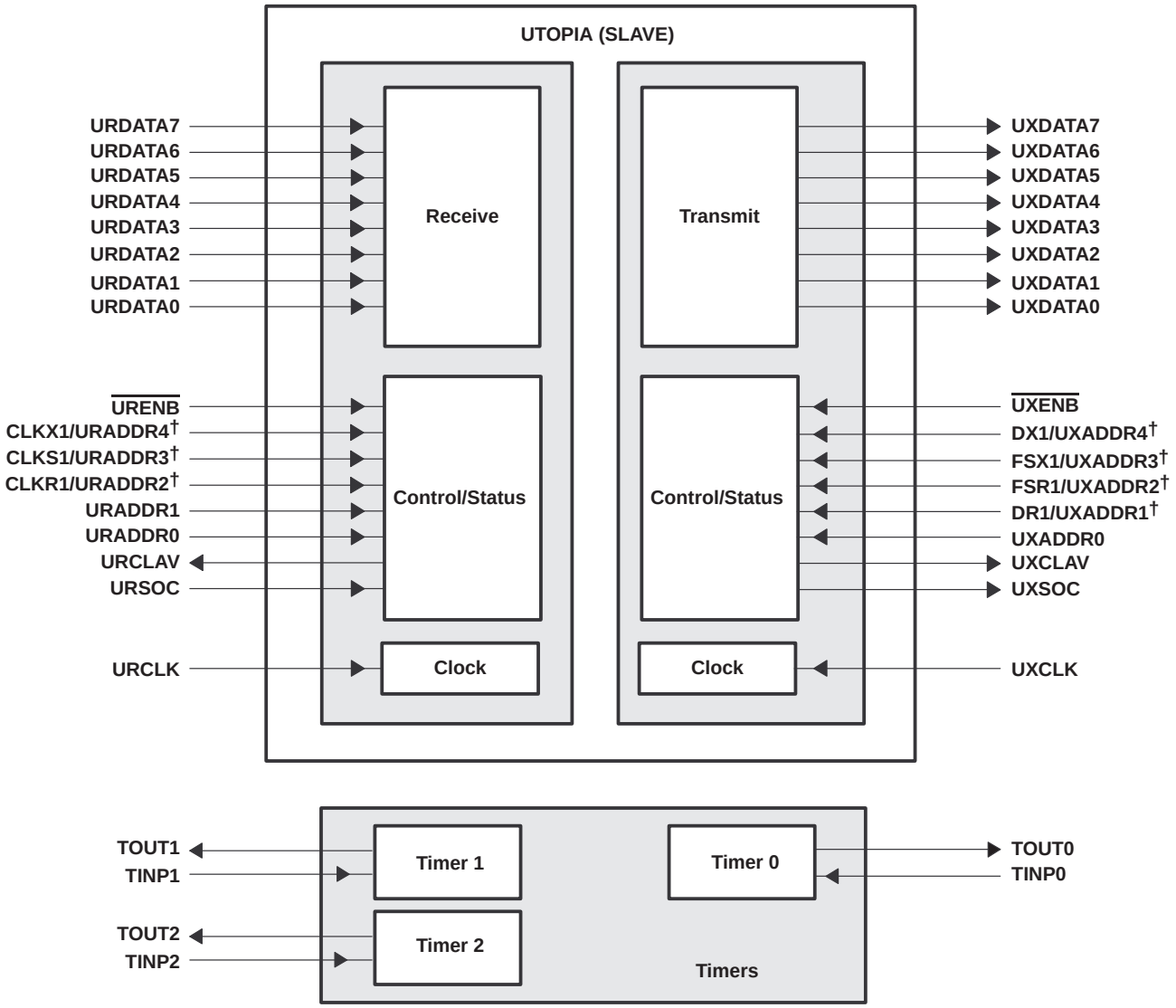

† These UTOPIA pins are muxed with the McBSP1 peripheral. By default, these signals function as McBSP1. For more details on these muxed pins, see the Device Configurations section of this data sheet.

Figure 4. Peripheral Signals (Continued)

DEVICE CONFIGURATIONS

The TCI100 device configurations are determined by external pullup/pulldown resistors on the following pins (all of which are latched during device reset):

- peripherals selection
  - BEA11 (UTOPIA_EN)
  - PCI_EN (see Table 26 footnotes)
  - MCBSP2_EN (see Table 26 footnotes)

- other device configurations (C64x)
  - BEA[20:13, 7]
  - HD5

peripherals selection

Some TCI100 peripherals share the same pins (internally muxed) and are mutually exclusive (i.e., HPI, general-purpose input/output pins GP[15:9], PCI and its internal EEPROM, McBSP1, McBSP2, and UTOPIA). The VCP/TCP coprocessors and other C64x peripherals (i.e., the Timers, McBSP0, and the GP[8:0] pins), are always available.

- UTOPIA and McBSP1 peripherals

  The UTOPIA_EN pin (BEA11) is latched at reset. For TCI100 devices, this pin selects whether the UTOPIA peripheral or McBSP1 peripheral is functionally enabled (see Table 25).

Table 25. UTOPIA_EN Peripheral Selection (McBSP1 and UTOPIA)

PERIPHERAL SELECTION	PERIPHERALS SELECTED		DESCRIPTION
UTOPIA_EN (BEA11) Pin [D16]	UTOPIA	McBSP1	
0		√	McBSP1 is enabled and UTOPIA is disabled [default]. This means all multiplexed McBSP1/UTOPIA pins function as McBSP1 and all other standalone UTOPIA pins are tied-off (Hi-Z).
1	√		UTOPIA is enabled and McBSP1 is disabled. This means all multiplexed McBSP1/UTOPIA pins now function as UTOPIA and all other standalone McBSP1 pins are tied-off (Hi-Z).

- HPI, GP[15:9], PCI, EEPROM (internal to PCI), and McBSP2 peripherals

  The PCI_EN and MCBSP2_EN pins are latched at reset. They determine specific peripheral selection for the TCI100 devices, summarized in Table 26.

DEVICE CONFIGURATIONS (CONTINUED)

Table 26. PCI_EN and MCBSP2_EN Peripheral Selection (HPI, GP[15:9], PCI, and McBSP2)

PERIPHERAL SELECTION†		PERIPHERALS SELECTED				
PCI_EN Pin [AA4]	MCBSP2_EN Pin [AF3]	HPI	GP[15:9]	PCI	EEPROM (Internal to PCI)	McBSP2
0	0	√	√			√
0	1	√	√			√
1	0			√	√	‡
1	1			√		√

† The PCI_EN pin *must* be driven valid at all times and the user *must not* switch values throughout device operation.
The MCBSP2_EN pin *must* be driven valid at all times and the user *can* switch values throughout device operation.

‡ The only time McBSP2 is disabled is when both PCI_EN = 1 and MCBSP2_EN = 0. This configuration enables, at reset, the auto-initialization of the PCI peripheral through the PCI internal EEPROM [provided the PCI EEPROM Auto-Initialization pin (BEA13) is pulled up (EEAI = 1)]. The user can then enable the McBSP2 peripheral (disabling EEPROM) by dynamically changing MCBSP2_EN to a “1” after the device is initialized (out of reset).

- If the PCI is disabled (PCI_EN = 0), the HPI peripheral is enabled and GP[15:9] pins can be programmed as GPIO, provided the GPxEN and GPxDIR bits are properly configured. [Note: The PCI_EN pin *must* be driven valid at all times and the user *must not* switch values throughout device operation.]

  This means all multiplexed HPI/PCI pins function as HPI and all standalone PCI pins ($\overline{\text{PCBE0}}$ and XSP_CS) are tied-off (Hi-Z). Also, the multiplexed GPIO/PCI pins can be used as GPIO with the proper software configuration of the GPIO enable and direction registers (for more details, see Table 28).

- If the PCI is enabled (PCI_EN = 1), the HPI peripheral is disabled. [Note: The PCI_EN pin *must* be driven valid at all times and the user *must not* switch values throughout device operation.]

  This means all multiplexed HPI/PCI pins function as PCI. Also, the multiplexed GPIO/PCI pins function as PCI pins (for more details, see Table 28).

- The MCBSP2_EN pin, in combination with the PCI_EN pin, controls the selection of the McBSP2 peripheral and the PCI internal EEPROM (for more details, see Table 26 and its footnotes). [Note: The MCBSP2_EN pin *must* be driven valid at all times and the user *can* switch values throughout device operation.]

other device configurations

Table 27 describes the TCI100 device configuration pins, which are set up via external pullup/pulldown resistors through the specified EMIFB address bus pins (BEA[20:13, 11, 9:7]) and the HD5 pin. For more details on these device configuration pins, see the Terminal Functions table and the Debugging Considerations section.

DEVICE CONFIGURATIONS (CONTINUED)

Table 27. Device Configuration Pins (BEA[20:13, 9:7], HD5, and BEA11)

CONFIGURATION PIN	NO.	FUNCTIONAL DESCRIPTION
BEA20	E16	Device Endian mode (LEND) 0 – System operates in Big Endian mode 1 – System operates in Little Endian mode (default)
BEA[19:18]	[D18, C18]	Bootmode [1:0] 00 – No boot 01 – HPI boot 10 – EMIFB 8-bit ROM boot with default timings (default mode) 11 – Reserved
BEA[17:16]	[B18, A18]	EMIFA input clock select Clock mode select for EMIFA (AECLKIN_SEL[1:0]) 00 – AECLKIN (default mode) 01 – CPU/4 Clock Rate 10 – CPU/6 Clock Rate 11 – Reserved
BEA[15:14]	[D17, C17]	EMIFB input clock select Clock mode select for EMIFB (BECLKIN_SEL[1:0]) 00 – BECLKIN (default mode) 01 – CPU/4 Clock Rate 10 – CPU/6 Clock Rate 11 – Reserved
BEA13	B17	PCI EEPROM Auto-Initialization (EEAI) PCI auto-initialization via external EEPROM 0 – PCI auto-initialization through EEPROM is disabled; the PCI peripheral uses the specified PCI default values (default). 1 – PCI auto-initialization through EEPROM is enabled; the PCI peripheral is configured through EEPROM provided the PCI peripheral pin is enabled (PCI_EN = 1) and the McBSP2 peripheral pin is disabled (MCBSP2_EN = 0). Note: If the PCI peripheral is disabled (PCI_EN pin = 0), this pin must ***not*** be pulled up. For more information on the PCI EEPROM default values, see the *TMS320C6000 DSP Peripheral Component Interconnect (PCI) Reference Guide* (literature number SPRU581).
BEA11	D16	UTOPIA Enable (UTOPIA_EN) UTOPIA peripheral enable (functional) 0 – UTOPIA peripheral disabled (McBSP1 functions are enabled). [default] This means all multiplexed McBSP1/UTOPIA pins function as McBSP1 and all other standalone UTOPIA pins are tied-off (Hi-Z). 1 – UTOPIA peripheral enabled (McBSP1 functions are disabled). This means all multiplexed McBSP1/UTOPIA pins now function as UTOPIA and all other standalone McBSP1 pins are tied-off (Hi-Z).

DEVICE CONFIGURATIONS (CONTINUED)

Table 27. Device Configuration Pins (BEA[20:13, 9:7], HD5, and BEA11) (Continued)

CONFIGURATION PIN	NO.	FUNCTIONAL DESCRIPTION
BEA7 BEA8 BEA9	D15 A16 B16	**Do not** oppose IPD Pullup (**For proper device operation, this pin must be externally pulled up with a 1-kΩ resistor.**) Pullup (**For proper device operation, this pin must be externally pulled up with a 1-kΩ resistor.**)
HD5	Y1	HPI peripheral bus width (HPI_WIDTH) 0 − HPI operates as an HPI16. (HPI bus is 16 bits wide. HD[15:0] pins are used and the remaining HD[31:16] pins are reserved pins in the Hi-Z state.) 1 − HPI operates as an HPI32. (HPI bus is 32 bits wide. All HD[31:0] pins are used for host-port operations.)

multiplexed pins

Multiplexed pins are pins that are shared by more than one peripheral and are internally multiplexed. Some of these pins are configured by software, and the others are configured by external pullup/pulldown resistors only at reset. Those muxed pins that are configured by software can be programmed to switch functionalities at any time. Those muxed pins that are configured by external pullup/pulldown resistors are mutually exclusive; only one peripheral has primary control of the function of these pins after reset. Table 28 identifies the multiplexed pins on the TCI100 device; shows the default (primary) function and the default settings after reset; and describes the pins, registers, etc. necessary to configure specific multiplexed functions.

debugging considerations

It is recommended that external connections be provided to device configuration pins, including CLKMODE[1:0], BEA[20:13, 11, 9:7], HD5/AD5, PCI_EN, and MCBSP2_EN. Although internal pullup/pulldown resistors exist on these pins (except for HD5/AD5), providing external connectivity adds convenience to the user in debugging and flexibility in switching operating modes.

Internal pullup/pulldown resistors also exist on the non-configuration pins on the BEA bus (BEA[12, 10, 6:1]). Do not oppose the internal pullup/pulldown resistors on these non-configuration pins with external pullup/pulldown resistors. If an external controller provides signals to these non-configuration pins, these signals must be driven to the default state of the pins at reset, or not be driven at all.

For the internal pullup/pulldown resistors on the TCI100 device pins, see the terminal functions table.

DEVICE CONFIGURATIONS (CONTINUED)

Table 28. TCI100 Device Multiplexed Pins†

MULTIPLEXED PINS NAME	NO.	DEFAULT FUNCTION	DEFAULT SETTING	DESCRIPTION
CLKOUT4/GP1	AE6	CLKOUT4	GP1EN = 0 (disabled)	These pins are software-configurable. To use these pins as GPIO pins, the GPxEN bits in the GPIO Enable Register and the GPxDIR bits in the GPIO Direction Register must be properly configured. GPxEN = 1: GPx pin enabled GPxDIR = 0: GPx pin is an input GPxDIR = 1: GPx pin is an output
CLKOUT6/GP2	AD6	CLKOUT6	GP2EN = 0 (disabled)	
CLKS2/GP8	AE4	CLKS2	GP8EN = 0 (disabled)	
GP9/PIDSEL	M3	None	GPxEN = 0 (disabled) PCI_EN = 0 (disabled)†	To use GP[15:9] as GPIO pins, the PCI needs to be disabled (PCI_EN = 0), the GPxEN bits in the GPIO Enable Register and the GPxDIR bits in the GPIO Direction Register must be properly configured. GPxEN = 1: GPx pin enabled GPxDIR = 0: GPx pin is an input GPxDIR = 1: GPx pin is an output
GP10/$\overline{\text{PCBE3}}$	L2			
GP11/$\overline{\text{PREQ}}$	F1			
GP12/$\overline{\text{PGNT}}$	J3			
GP13/$\overline{\text{PINTA}}$	G4			
GP14/PCLK	F2			
GP15/$\overline{\text{PRST}}$	G3			
DX1/UXADDR4	AB11	DX1	UTOPIA_EN (BEA11) = 0 (disabled)†	By default, McBSP1 is enabled upon reset (UTOPIA is disabled). To enable the UTOPIA peripheral, an external pullup resistor (1 kΩ) must be provided on the BEA11 pin (setting UTOPIA_EN = 1 at reset).
FSX1/UXADDR3	AB13	FSX1		
FSR1/UXADDR2	AC9	FSR1		
DR1/UXADDR1	AF11	DR1		
CLKX1/URADDR4	AB12	CLKX1		
CLKS1/URADDR3	AC8	CLKS1		
CLKR1/URADDR2	AC10	CLKR1		
CLKX2/XSP_CLK	AC2	CLKX2	PCI_EN = 0 (disabled)†	By default, HPI is enabled upon reset (PCI is disabled). To enable the PCI peripheral an external pullup resistor (1 kΩ) must be provided on the PCI_EN pin (setting PCI_EN = 1 at reset).
DR2/XSP_DI	AB3	DR2		
DX2/XSP_DO	AA2	DX2		
HD[31:0]/AD[31:0]	‡	HD[31:0]		
$\overline{\text{HAS}}$/PPAR	T3	$\overline{\text{HAS}}$		
HCNTL1/$\overline{\text{PDEVSEL}}$	R1	HCNTL1		
HCNTL0/$\overline{\text{PSTOP}}$	T4	HCNTL0		
$\overline{\text{HDS1}}$/$\overline{\text{PSERR}}$	T1	$\overline{\text{HDS1}}$		
$\overline{\text{HDS2}}$/$\overline{\text{PCBE1}}$	T2	$\overline{\text{HDS2}}$		
HR/$\overline{\text{W}}$/$\overline{\text{PCBE2}}$	P1	HR/$\overline{\text{W}}$		
HHWIL/$\overline{\text{PTRDY}}$	R3	HHWIL (HPI16 only)		
$\overline{\text{HINT}}$/$\overline{\text{PFRAME}}$	R4	$\overline{\text{HINT}}$		
$\overline{\text{HCS}}$/$\overline{\text{PPERR}}$	R2	$\overline{\text{HCS}}$		
$\overline{\text{HRDY}}$/$\overline{\text{PIRDY}}$	P4	$\overline{\text{HRDY}}$		

† All other standalone UTOPIA and PCI pins are tied-off internally (pins in Hi-Z) when the peripheral is disabled [UTOPIA_EN (BEA11) = 0 or PCI_EN = 0].
‡ For the HD[31:0]/AD[31:0] multiplexed pins pin numbers, see the *Terminal Functions* table.

Terminal Functions

SIGNAL NAME	NO.	TYPE†	IPD/ IPU‡	DESCRIPTION
CLOCK/PLL CONFIGURATION				
CLKIN	H4	I	IPD	Clock Input. This clock is the input to the on-chip PLL.
CLKOUT4/GP1§	AE6	I/O/Z	IPD	Clock output at 1/4 of the device speed (**O/Z**) [default] or this pin can be programmed as a GPIO 1 pin (**I/O/Z**).
CLKOUT6/GP2§	AD6	I/O/Z	IPD	Clock output at 1/6 of the device speed (**O/Z**) [default] or this pin can be programmed as a GPIO 2 pin (**I/O/Z**).
CLKMODE1	G1	I	IPD	Clock mode select • Selects whether the CPU clock frequency = input clock frequency x1 (Bypass), x6, or x12. For more details on the CLKMODE pins and the PLL multiply factors, see the Clock PLL section of this data sheet.
CLKMODE0	H2	I	IPD	
PLLV¶	J6	A#		PLL voltage supply
JTAG EMULATION				
TMS	AB16	I	IPU	JTAG test-port mode select
TDO	AE19	O/Z	IPU	JTAG test-port data out
TDI	AF18	I	IPU	JTAG test-port data in
TCK	AF16	I	IPU	JTAG test-port clock
$\overline{\text{TRST}}$	AB15	I	IPD	JTAG test-port reset. For IEEE 1149.1 JTAG compatibility, see the IEEE 1149.1 JTAG Compatibility Statement section of this data sheet.
EMU11	AC18	I/O/Z	IPU	Emulation pin 11. Reserved for future use, leave unconnected.
EMU10	AD18	I/O/Z	IPU	Emulation pin 10. Reserved for future use, leave unconnected.
EMU9	AE18	I/O/Z	IPU	Emulation pin 9. Reserved for future use, leave unconnected.
EMU8	AC17	I/O/Z	IPU	Emulation pin 8. Reserved for future use, leave unconnected.
EMU7	AF17	I/O/Z	IPU	Emulation pin 7. Reserved for future use, leave unconnected.
EMU6	AD17	I/O/Z	IPU	Emulation pin 6. Reserved for future use, leave unconnected.
EMU5	AE17	I/O/Z	IPU	Emulation pin 5. Reserved for future use, leave unconnected.
EMU4	AC16	I/O/Z	IPU	Emulation pin 4. Reserved for future use, leave unconnected.
EMU3	AD16	I/O/Z	IPU	Emulation pin 3. Reserved for future use, leave unconnected.
EMU2	AE16	I/O/Z	IPU	Emulation pin 2. Reserved for future use, leave unconnected.
EMU1 EMU0	AC15 AF15	I/O/Z	IPU	Emulation [1:0] pins • Select the device functional mode of operation EMU[1:0] — Operation 00 — Boundary Scan/Normal Mode (see Note) 01 — Reserved 10 — Reserved 11 — Emulation/Normal Mode [default] (see the IEEE 1149.1 JTAG Compatibility Statement section of this data sheet) Normal mode refers to the DSPs normal operational mode, when the DSP is free running. The DSP can be placed in normal operational mode when the EMU[1:0] pins are configured for either Boundary Scan or Emulation. Note: When the EMU[1:0] pins are configured for Boundary Scan mode, the internal pulldown (IPD) on the $\overline{\text{TRST}}$ signal must ***not*** be opposed in order to operate in Normal mode. For the Boundary Scan mode pulldown EMU[1:0] pins with a dedicated 1-kΩ resistor.

† I = Input, O = Output, Z = High impedance, S = Supply voltage, GND = Ground
‡ IPD = Internal pulldown, IPU = Internal pullup. (These IPD/IPU signal pins feature a 30-kΩ IPD or IPU resistor. To pull up a signal to the opposite supply rail, a 1-kΩ resistor should be used.)
§ These pins are multiplexed pins. For more details, see the Device Configurations section of this data sheet.
¶ PLLV is not part of external voltage supply. See the Clock PLL section for information on how to connect this pin.
# A = Analog signal (PLL Filter)

Terminal Functions (Continued)

SIGNAL NAME	SIGNAL NO.	TYPE†	IPD/ IPU‡	DESCRIPTION
RESETS, INTERRUPTS, AND GENERAL-PURPOSE INPUT/OUTPUTS				
$\overline{\text{RESET}}$	AC7	I		Device reset
NMI	B4	I	IPD	Nonmaskable interrupt, edge-driven (rising edge) Any noise on the NMI pin may trigger an NMI interrupt; therefore, if the NMI pin is not used, it is recommended that the NMI pin be grounded versus relying on the IPD.
GP7/EXT_INT7	AF4	I/O/Z	IPU	General-purpose input/output (GPIO) pins (**I/O/Z**) or external interrupts (**input only**). The default after reset setting is GPIO enabled as input-only. • When these pins function as External Interrupts [by selecting the corresponding interrupt enable register bit (IER.[7:4])], they are edge-driven and the polarity can be independently selected via the External Interrupt Polarity Register bits (EXTPOL.[3:0]).
GP6/EXT_INT6	AD5			
GP5/EXT_INT5	AE5			
GP4/EXT_INT4	AF5			
GP15/$\overline{\text{PRST}}$§	G3	I/O/Z		General-purpose input/output (GPIO) 15 pin (**I/O/Z**) or PCI reset (**I**). No function at default.
GP14/PCLK§	F2			GPIO 14 pin (**I/O/Z**) or PCI clock (**I**). No function at default.
GP13/$\overline{\text{PINTA}}$§	G4			GPIO 13 pin (**I/O/Z**) or PCI interrupt A (**O/Z**). No function at default.
GP12/$\overline{\text{PGNT}}$§	J3			GPIO 12 pin (**I/O/Z**) or PCI bus grant (**I**). No function at default.
GP11/$\overline{\text{PREQ}}$§	F1			GPIO 11 pin (**I/O/Z**) or PCI bus request (**O/Z**). No function at default.
GP10/$\overline{\text{PCBE3}}$§	L2			GPIO 10 pin (**I/O/Z**) or PCI command/byte enable 3 (**I/O/Z**). No function at default.
GP9/PIDSEL§	M3			GPIO 9 pin (**I/O/Z**) or PCI initialization device select (**I**). No function at default.
GP3	AC6		IPD	GPIO 3 pin (**I/O/Z**). The default after reset setting is GPIO 3 enabled as input-only.
GP0	AF6		IPD	GPIO 0 pin. The general-purpose I/O 0 pin (GPIO 0) (**I/O/Z**) can be programmed as GPIO 0 (**input only**) [default] or as GPIO 0 (**output only**) pin or output as a general-purpose interrupt (GP0INT) signal (**output only**).
CLKS2/GP8§	AE4	I/O/Z	IPD	McBSP2 external clock source (CLKS2) [**input only**] [default] or this pin can be programmed as a GPIO 8 pin (**I/O/Z**).
CLKOUT6/GP2§	AD6	I/O/Z	IPD	Clock output at 1/6 of the device speed (**O/Z**) [default] or this pin can be programmed as a GPIO 2 pin (**I/O/Z**).
CLKOUT4/GP1§	AE6	I/O/Z	IPD	Clock output at 1/4 of the device speed (**O/Z**) [default] or this pin can be programmed as a GPIO 1 pin (**I/O/Z**).
HOST-PORT INTERFACE (HPI) [C64x] or PERIPHERAL COMPONENT INTERCONNECT (PCI)				
PCI_EN	AA4	I	IPD	PCI enable pin. This pin controls the selection (enable/disable) of the HPI and GP[15:9], or PCI peripherals. This pin works in conjunction with the MCBSP2_EN pin to enable/disable other peripherals (for more details, see the Device Configurations section of this data sheet).
$\overline{\text{HINT}}$/$\overline{\text{PFRAME}}$§	R4	I/O/Z		Host interrupt from DSP to host (**O**) [default] or PCI frame (**I/O/Z**)
HCNTL1/ $\overline{\text{PDEVSEL}}$§	R1	I/O/Z		Host control − selects between control, address, or data registers (**I**) [default] or PCI device select (**I/O/Z**).
HCNTL0/ $\overline{\text{PSTOP}}$§	T4	I/O/Z		Host control − selects between control, address, or data registers (**I**) [default] or PCI stop (**I/O/Z**)
HHWIL/$\overline{\text{PTRDY}}$§	R3	I/O/Z		Host half-word select − first or second half-word (not necessarily high or low order) [For HPI16 bus width selection only] (**I**) [default] or PCI target ready (**I/O/Z**)
HR/$\overline{\text{W}}$/$\overline{\text{PCBE2}}$§	P1	I/O/Z		Host read or write select (**I**) [default] or PCI command/byte enable 2 (**I/O/Z**)

† I = Input, O = Output, Z = High impedance, S = Supply voltage, GND = Ground
‡ IPD = Internal pulldown, IPU = Internal pullup. (These IPD/IPU signal pins feature a 30-kΩ IPD or IPU resistor. To pull up a signal to the opposite supply rail, a 1-kΩ resistor should be used.)
§ These pins are multiplexed pins. For more details, see the Device Configurations section of this data sheet.

Terminal Functions (Continued)

SIGNAL NAME	SIGNAL NO.	TYPE†	IPD/ IPU‡	DESCRIPTION
HOST-PORT INTERFACE (HPI) [C64x] or PERIPHERAL COMPONENT INTERCONNECT (PCI) (CONTINUED)				
$\overline{\text{HAS}}$/PPAR§	T3	I/O/Z		Host address strobe (**I**) [default] or PCI parity (**I/O/Z**)
$\overline{\text{HCS}}$/$\overline{\text{PPERR}}$§	R2	I/O/Z		Host chip select (**I**) [default] or PCI parity error (**I/O/Z**)
$\overline{\text{HDS1}}$/$\overline{\text{PSERR}}$§	T1	I/O/Z		Host data strobe 1 (**I**) [default] or PCI system error (**I/O/Z**)
$\overline{\text{HDS2}}$/$\overline{\text{PCBE1}}$§	T2	I/O/Z		Host data strobe 2 (**I**) [default] or PCI command/byte enable 1 (**I/O/Z**)
$\overline{\text{HRDY}}$/$\overline{\text{PIRDY}}$§	P4	I/O/Z		Host ready from DSP to host (**O**) [default] or PCI initiator ready (**I/O/Z**).
HD31/AD31§	J2	I/O/Z		Host-port data (**I/O/Z**) [default] (C64x) or PCI data-address bus (**I/O/Z**) As HPI data bus (PCI_EN pin = 0) • Used for transfer of data, address, and control • Host-Port bus width user-configurable at device reset via a 10-kΩ resistor pullup/pulldown resistor on the HD5 pin: HD5 pin = 0: HPI operates as an HPI16. (HPI bus is 16 bits wide. HD[15:0] pins are used and the remaining HD[31:16] pins are reserved pins in the high-impedance state.) HD5 pin = 1: HPI operates as an HPI32. (HPI bus is 32 bits wide. All HD[31:0] pins are used for host-port operations.) As PCI data-address bus (PCI_EN pin = 1) • Used for transfer of data and address
HD30/AD30§	K3			
HD29/AD29§	J1			
HD28/AD28§	K4			
HD27/AD27§	K2			
HD26/AD26§	L3			
HD25/AD25§	K1			
HD24/AD24§	L4			
HD23/AD23§	L1			
HD22/AD22§	M4			
HD21/AD21§	M2			
HD20/AD20§	N4			
HD19/AD19§	M1			
HD18/AD18§	N5			
HD17/AD17§	N1			
HD16/AD16§	P5			
HD15/AD15§	U4			
HD14/AD14§	U1			
HD13/AD13§	U3			
HD12/AD12§	U2			
HD11/AD11§	V4			
HD10/AD10§	V1			
HD9/AD9§	V3			
HD8/AD8§	V2			
HD7/AD7§	W2			
HD6/AD6§	W4			
HD5/AD5§	Y1			
HD4/AD4§	Y3			
HD3/AD3§	Y2			
HD2/AD2§	Y4			
HD1/AD1§	AA1			
HD0/AD0§	AA3			

† I = Input, O = Output, Z = High impedance, S = Supply voltage, GND = Ground
‡ IPD = Internal pulldown, IPU = Internal pullup. (These IPD/IPU signal pins feature a 30-kΩ IPD or IPU resistor. To pull up a signal to the opposite supply rail, a 1-kΩ resistor should be used.)
§ These pins are multiplexed pins. For more details, see the Device Configurations section of this data sheet.

Terminal Functions (Continued)

SIGNAL NAME	SIGNAL NO.	TYPE†	IPD/ IPU‡	DESCRIPTION
HOST-PORT INTERFACE (HPI) [C64x] or PERIPHERAL COMPONENT INTERCONNECT (PCI) (CONTINUED)				
$\overline{\text{PCBE0}}$	W3	I/O/Z		PCI command/byte enable 0 (**I/O/Z**). When PCI is disabled (PCI_EN = 0), this pin is tied-off.
XSP_CS	AD1	O	IPD	PCI serial interface chip select (**O**). When PCI is disabled (PCI_EN = 0), this pin is tied-off.
CLKX2/ XSP_CLK§	AC2	I/O/Z	IPD	McBSP2 transmit clock (**I/O/Z**) [default] or PCI serial interface clock (**O**).
DR2/XSP_DI§	AB3	I	IPU	McBSP2 receive data (**I**) [default] or PCI serial interface data in (**I**). In PCI mode, this pin is connected to the output data pin of the serial PROM.
DX2/XSP_DO§	AA2	O/Z	IPU	McBSP2 transmit data (**O/Z**) [default] or PCI serial interface data out (**O**). In PCI mode, this pin is connected to the input data pin of the serial PROM.
GP15/$\overline{\text{PRST}}$§	G3	I/O/Z		General-purpose input/output (GPIO) 15 pin (**I/O/Z**) or PCI reset (**I**). No function at default.
GP14/PCLK§	F2			GPIO 14 pin (**I/O/Z**) or PCI clock (**I**). No function at default.
GP13/$\overline{\text{PINTA}}$§	G4			GPIO 13 pin (**I/O/Z**) or PCI interrupt A (**O/Z**). No function at default.
GP12/$\overline{\text{PGNT}}$§	J3			GPIO 12 pin (**I/O/Z**) or PCI bus grant (**I**). No function at default.
GP11/$\overline{\text{PREQ}}$§	F1			GPIO 11 pin (**I/O/Z**) or PCI bus request (**O/Z**). No function at default.
GP10/$\overline{\text{PCBE3}}$§	L2			GPIO 10 pin (**I/O/Z**) or PCI command/byte enable 3 (**I/O/Z**). No function at default.
GP9/PIDSEL§	M3			GPIO 9 pin (**I/O/Z**) or PCI initialization device select (**I**). No function at default.
EMIFA (64-bit) − CONTROL SIGNALS COMMON TO ALL TYPES OF MEMORY‖☆				
$\overline{\text{ACE3}}$	L26	O/Z	IPU	EMIFA memory space enables • Enabled by bits 28 through 31 of the word address • Only one pin is asserted during any external data access
$\overline{\text{ACE2}}$	K23	O/Z	IPU	
$\overline{\text{ACE1}}$	K24	O/Z	IPU	
$\overline{\text{ACE0}}$	K25	O/Z	IPU	
$\overline{\text{ABE7}}$	T23	O/Z	IPU	EMIFA byte-enable control • Decoded from the low-order address bits. The number of address bits or byte enables used depends on the width of external memory. • Byte-write enables for most types of memory • Can be directly connected to SDRAM read and write mask signal (SDQM)
$\overline{\text{ABE6}}$	T24	O/Z	IPU	
$\overline{\text{ABE5}}$	R25	O/Z	IPU	
$\overline{\text{ABE4}}$	R26	O/Z	IPU	
$\overline{\text{ABE3}}$	M25	O/Z	IPU	
$\overline{\text{ABE2}}$	M26	O/Z	IPU	
$\overline{\text{ABE1}}$	L23	O/Z	IPU	
$\overline{\text{ABE0}}$	L24	O/Z	IPU	
$\overline{\text{APDT}}$	M22	O/Z	IPU	EMIFA peripheral data transfer, allows direct transfer between external peripherals

† I = Input, O = Output, Z = High impedance, S = Supply voltage, GND = Ground

‡ IPD = Internal pulldown, IPU = Internal pullup. (These IPD/IPU signal pins feature a 30-kΩ IPD or IPU resistor. To pull up a signal to the opposite supply rail, a 1-kΩ resistor should be used.)

§ These pins are multiplexed pins. For more details, see the Device Configurations section of this data sheet.

‖ These C64x™ devices have two EMIFs (64-bit EMIFA and 16-bit EMIFB). The prefix “A” in front of a signal name indicates it is an EMIFA signal whereas a prefix “B” in front of a signal name indicates it is an EMIFB signal. Throughout the rest of this document, in generic EMIF areas of discussion, the prefix “A” or “B” may be omitted from the signal name.

☆To maintain signal integrity for the EMIF signals, serial termination resistors should be inserted into all EMIF output signal lines.

Terminal Functions (Continued)

SIGNAL NAME	NO.	TYPE†	IPD/ IPU‡	DESCRIPTION
EMIFA (64-BIT) − BUS ARBITRATION‖☆				
$\overline{\text{AHOLDA}}$	N22	O	IPU	EMIFA hold-request-acknowledge to the host
$\overline{\text{AHOLD}}$	V23	I	IPU	EMIFA hold request from the host
ABUSREQ	P22	O	IPU	EMIFA bus request output
EMIFA (64-BIT) − ASYNCHRONOUS/SYNCHRONOUS MEMORY CONTROL‖☆				
AECLKIN	H25	I	IPD	EMIFA external input clock. The EMIFA input clock (AECLKIN, CPU/4 clock, or CPU/6 clock) is selected at reset via the pullup/pulldown resistors on the BEA[17:16] pins. AECLKIN is the default for the EMIFA input clock.
AECLKOUT2	J23	O/Z	IPD	EMIFA output clock 2. Programmable to be EMIFA input clock (AECLKIN, CPU/4 clock, or CPU/6 clock) frequency divided-by-1, -2, or -4.
AECLKOUT1	J26	O/Z	IPD	EMIFA output clock 1 [at EMIFA input clock (AECLKIN, CPU/4 clock, or CPU/6 clock) frequency].
$\overline{\text{AARE}}$/ $\overline{\text{ASDCAS}}$/ $\overline{\text{ASADS}}$/$\overline{\text{ASRE}}$	J25	O/Z	IPU	EMIFA asynchronous memory read-enable/SDRAM column-address strobe/programmable synchronous interface-address strobe or read-enable • For programmable synchronous interface, the RENEN field in the CE Space Secondary Control Register (CExSEC) selects between $\overline{\text{ASADS}}$ and $\overline{\text{ASRE}}$: If RENEN = 0, then the $\overline{\text{ASADS}}$/$\overline{\text{ASRE}}$ signal functions as the $\overline{\text{ASADS}}$ signal. If RENEN = 1, then the $\overline{\text{ASADS}}$/$\overline{\text{ASRE}}$ signal functions as the $\overline{\text{ASRE}}$ signal.
$\overline{\text{AAOE}}$/ $\overline{\text{ASDRAS}}$/ $\overline{\text{ASOE}}$	J24	O/Z	IPU	EMIFA asynchronous memory output-enable/SDRAM row-address strobe/programmable synchronous interface output-enable
$\overline{\text{AAWE}}$/ $\overline{\text{ASDWE}}$/ $\overline{\text{ASWE}}$	K26	O/Z	IPU	EMIFA asynchronous memory write-enable/SDRAM write-enable/programmable synchronous interface write-enable
ASDCKE	L25	O/Z	IPU	EMIFA SDRAM clock-enable (used for self-refresh mode). [EMIFA module only.] • If SDRAM is not in system, ASDCKE can be used as a general-purpose output.
$\overline{\text{ASOE3}}$	R22	O/Z	IPU	EMIFA synchronous memory output-enable for $\overline{\text{ACE3}}$ (for glueless FIFO interface)
AARDY	L22	I	IPU	Asynchronous memory ready input
EMIFA (64-BIT) − ADDRESS‖☆				
AEA22	T22	O/Z	IPD	EMIFA external address (doubleword address)
AEA21	V24			
AEA20	V25			
AEA19	V26			
AEA18	U23			
AEA17	U24			
AEA16	U25			
AEA15	U26			
AEA14	T25			
AEA13	T26			
AEA12	R23			
AEA11	R24			

† I = Input, O = Output, Z = High impedance, S = Supply voltage, GND = Ground

‡ IPD = Internal pulldown, IPU = Internal pullup. (These IPD/IPU signal pins feature a 30-kΩ IPD or IPU resistor. To pull up a signal to the opposite supply rail, a 1-kΩ resistor should be used.)

‖ These C64x™ devices have two EMIFs (64-bit EMIFA and 16-bit EMIFB). The prefix “A” in front of a signal name indicates it is an EMIFA signal whereas a prefix “B” in front of a signal name indicates it is an EMIFB signal. Throughout the rest of this document, in generic EMIF areas of discussion, the prefix “A” or “B” may be omitted from the signal name.

☆To maintain signal integrity for the EMIF signals, serial termination resistors should be inserted into all EMIF output signal lines.

Terminal Functions (Continued)

SIGNAL NAME	SIGNAL NO.	TYPE†	IPD/ IPU‡	DESCRIPTION
EMIFA (64-BIT) − ADDRESS‖☆ (CONTINUED)				
AEA10	P23	O/Z	IPD	EMIFA external address (doubleword address)
AEA9	P24			
AEA8	P26			
AEA7	N23			
AEA6	N24			
AEA5	N26			
AEA4	M23			
AEA3	M24			
EMIFA (64-bit) − DATA‖☆				
AED63	AF24	I/O/Z	IPU	EMIFA external data
AED62	AF23			
AED61	AE23			
AED60	AE22			
AED59	AD22			
AED58	AF22			
AED57	AD21			
AED56	AE21			
AED55	AC21			
AED54	AF21			
AED53	AD20			
AED52	AE20			
AED51	AC20			
AED50	AF20			
AED49	AC19			
AED48	AD19			
AED47	W24			
AED46	W23			
AED45	Y26			
AED44	Y23			
AED43	Y25			
AED42	Y24			
AED41	AA26			
AED40	AA23			
AED39	AA25			
AED38	AA24			
AED37	AB26			

† I = Input, O = Output, Z = High impedance, S = Supply voltage, GND = Ground

‡ IPD = Internal pulldown, IPU = Internal pullup. (These IPD/IPU signal pins feature a 30-kΩ IPD or IPU resistor. To pull up a signal to the opposite supply rail, a 1-kΩ resistor should be used.)

‖ These C64x™ devices have two EMIFs (64-bit EMIFA and 16-bit EMIFB). The prefix “A” in front of a signal name indicates it is an EMIFA signal whereas a prefix “B” in front of a signal name indicates it is an EMIFB signal. Throughout the rest of this document, in generic EMIF areas of discussion, the prefix “A” or “B” may be omitted from the signal name.

☆To maintain signal integrity for the EMIF signals, serial termination resistors should be inserted into all EMIF output signal lines.

Terminal Functions (Continued)

SIGNAL NAME	SIGNAL NO.	TYPE†	IPD/ IPU‡	DESCRIPTION
EMIFA (64-bit) − DATA‖☆ (CONTINUED)				
AED36	AB24	I/O/Z	IPU	EMIFA external data
AED35	AB25			
AED34	AC25			
AED33	AC26			
AED32	AD26			
AED31	C26			
AED30	D26			
AED29	D25			
AED28	E25			
AED27	E24			
AED26	E26			
AED25	F24			
AED24	F25			
AED23	F23			
AED22	F26			
AED21	G24			
AED20	G25			
AED19	G23			
AED18	G26			
AED17	H23			
AED16	H24			
AED15	C19			
AED14	D19			
AED13	A20			
AED12	D20			
AED11	B20			
AED10	C20			
AED9	A21			
AED8	D21			
AED7	B21			
AED6	C21			
AED5	A22			
AED4	C22			
AED3	B22			
AED2	B23			
AED1	A23			
AED0	A24			

† I = Input, O = Output, Z = High impedance, S = Supply voltage, GND = Ground

‡ IPD = Internal pulldown, IPU = Internal pullup. (These IPD/IPU signal pins feature a 30-kΩ IPD or IPU resistor. To pull up a signal to the opposite supply rail, a 1-kΩ resistor should be used.)

‖ These C64x™ devices have two EMIFs (64-bit EMIFA and 16-bit EMIFB). The prefix “A” in front of a signal name indicates it is an EMIFA signal whereas a prefix “B” in front of a signal name indicates it is an EMIFB signal. Throughout the rest of this document, in generic EMIF areas of discussion, the prefix “A” or “B” may be omitted from the signal name.

☆To maintain signal integrity for the EMIF signals, serial termination resistors should be inserted into all EMIF output signal lines.

Terminal Functions (Continued)

SIGNAL NAME	NO.	TYPE†	IPD/ IPU‡	DESCRIPTION
EMIFB (16-bit) − CONTROL SIGNALS COMMON TO ALL TYPES OF MEMORY‖☆				
$\overline{\text{BCE3}}$	A13	O/Z	IPU	EMIFB memory space enables • Enabled by bits 26 through 31 of the word address • Only one pin is asserted during any external data access
$\overline{\text{BCE2}}$	C12	O/Z	IPU	
$\overline{\text{BCE1}}$	B12	O/Z	IPU	
$\overline{\text{BCE0}}$	A12	O/Z	IPU	
$\overline{\text{BBE1}}$	D13	O/Z	IPU	EMIFB byte-enable control • Decoded from the low-order address bits. The number of address bits or byte enables used depends on the width of external memory. • Byte-write enables for most types of memory • Can be directly connected to SDRAM read and write mask signal (SDQM)
$\overline{\text{BBE0}}$	C13	O/Z	IPU	
$\overline{\text{BPDT}}$	E12	O/Z	IPU	EMIFB peripheral data transfer, allows direct transfer between external peripherals
EMIFB (16-BIT) − BUS ARBITRATION‖☆				
$\overline{\text{BHOLDA}}$	E13	O	IPU	EMIFB hold-request-acknowledge to the host
$\overline{\text{BHOLD}}$	B19	I	IPU	EMIFB hold request from the host
BBUSREQ	E14	O	IPU	EMIFB bus request output
EMIFB (16-BIT) − ASYNCHRONOUS/SYNCHRONOUS MEMORY CONTROL‖☆				
BECLKIN	A11	I	IPD	EMIFB external input clock. The EMIFB input clock (BECLKIN, CPU/4 clock, or CPU/6 clock) is selected at reset via the pullup/pulldown resistors on the BEA[15:14] pins. BECLKIN is the default for the EMIFB input clock.
BECLKOUT2	D11	O/Z	IPD	EMIFB output clock 2. Programmable to be EMIFB input clock (BECLKIN, CPU/4 clock, or CPU/6 clock) frequency divided by 1, 2, or 4.
BECLKOUT1	D12	O/Z	IPD	EMIFB output clock 1 [at EMIFB input clock (BECLKIN, CPU/4 clock, or CPU/6 clock) frequency].
$\overline{\text{BARE}}$/ $\overline{\text{BSDCAS}}$/ $\overline{\text{BSADS}}$/$\overline{\text{BSRE}}$	A10	O/Z	IPU	EMIFB asynchronous memory read-enable/SDRAM column-address strobe/programmable synchronous interface-address strobe or read-enable • For programmable synchronous interface, the $\overline{\text{RENEN}}$ field in the CE Space Secondary Control Register (CExSEC) selects between $\overline{\text{BSADS}}$ and $\overline{\text{BSRE}}$: If RENEN = 0, then the $\overline{\text{BSADS}}$/$\overline{\text{BSRE}}$ signal functions as the $\overline{\text{BSADS}}$ signal. If RENEN = 1, then the $\overline{\text{BSADS}}$/$\overline{\text{BSRE}}$ signal functions as the $\overline{\text{BSRE}}$ signal.
$\overline{\text{BAOE}}$/ $\overline{\text{BSDRAS}}$/ $\overline{\text{BSOE}}$	B11	O/Z	IPU	EMIFB asynchronous memory output-enable/SDRAM row-address strobe/programmable synchronous interface output-enable
$\overline{\text{BAWE}}$/$\overline{\text{BSDWE}}$/ $\overline{\text{BSWE}}$	C11	O/Z	IPU	EMIFB asynchronous memory write-enable/SDRAM write-enable/programmable synchronous interface write-enable
$\overline{\text{BSOE3}}$	E15	O/Z	IPU	EMIFB synchronous memory output enable for $\overline{\text{BCE3}}$ (for glueless FIFO interface)
BARDY	E11	I	IPU	EMIFB asynchronous memory ready input

† I = Input, O = Output, Z = High impedance, S = Supply voltage, GND = Ground

‡ IPD = Internal pulldown, IPU = Internal pullup. (These IPD/IPU signal pins feature a 30-kΩ IPD or IPU resistor. To pull up a signal to the opposite supply rail, a 1-kΩ resistor should be used.)

‖ These C64x™ devices have two EMIFs (64-bit EMIFA and 16-bit EMIFB). The prefix “A” in front of a signal name indicates it is an EMIFA signal whereas a prefix “B” in front of a signal name indicates it is an EMIFB signal. Throughout the rest of this document, in generic EMIF areas of discussion, the prefix “A” or “B” may be omitted from the signal name.

☆To maintain signal integrity for the EMIF signals, serial termination resistors should be inserted into all EMIF output signal lines.

Terminal Functions (Continued)

SIGNAL NAME	SIGNAL NO.	TYPE†	IPD/ IPU‡	DESCRIPTION
EMIFB (16-BIT) − ADDRESS‖☆				
BEA20	E16	I/O/Z	IPU	EMIFB external address (half-word address) (**O/Z**) • Also controls initialization of DSP modes at reset (**I**) via pullup/pulldown resistors − Device Endian mode BEA20: 0 – Big Endian 1 – Little Endian (default mode) − Boot mode BEA[19:18]: 00 – No boot 01 − HPI boot 10 − EMIFB 8-bit ROM boot with default timings (default mode) 11 − Reserved − EMIF clock select BEA[17:16]: Clock mode select for EMIFA (AECLKIN_SEL[1:0]) 00 – AECLKIN (default mode) 01 − CPU/4 Clock Rate 10 − CPU/6 Clock Rate 11 − Reserved BEA[15:14]: Clock mode select for EMIFB (BECLKIN_SEL[1:0]) 00 – BECLKIN (default mode) 01 − CPU/4 Clock Rate 10 − CPU/6 Clock Rate 11 − Reserved − PCI EEPROM Auto-Initialization (EEAI) BEA13: PCI auto-initialization via external EEPROM If the PCI peripheral is disabled (PCI_EN pin = 0), this pin must ***not*** be pulled up. 0 − PCI auto-initialization through EEPROM is disabled (default). 1 − PCI auto-initialization through EEPROM is enabled. − UTOPIA Enable (UTOPIA_EN) BEA11: UTOPIA peripheral enable (functional) 0 − UTOPIA disabled (McBSP1 enabled) [default] 1 − UTOPIA enabled (McBSP1 disabled) **For proper device operation, the BEA8 and BEA9 pins must be externally pulled up with a 1-kΩ resistor.** For more details, see the Device Configurations section of this data sheet.
BEA19	D18		IPU	
BEA18	C18		IPD	
BEA17	B18			
BEA16	A18			
BEA15	D17			
BEA14	C17			
BEA13	B17			
BEA12	A17			
BEA11	D16			
BEA10	C16			
BEA9	B16			
BEA8	A16			
BEA7	D15			
BEA6	C15			
BEA5	B15			
BEA4	A15			
BEA3	D14			
BEA2	C14			
BEA1	A14			

† I = Input, O = Output, Z = High impedance, S = Supply voltage, GND = Ground

‡ IPD = Internal pulldown, IPU = Internal pullup. (These IPD/IPU signal pins feature a 30-kΩ IPD or IPU resistor. To pull up a signal to the opposite supply rail, a 1-kΩ resistor should be used.)

‖ These C64x™ devices have two EMIFs (64-bit EMIFA and 16-bit EMIFB). The prefix “A” in front of a signal name indicates it is an EMIFA signal whereas a prefix “B” in front of a signal name indicates it is an EMIFB signal. Throughout the rest of this document, in generic EMIF areas of discussion, the prefix “A” or “B” may be omitted from the signal name.

☆To maintain signal integrity for the EMIF signals, serial termination resistors should be inserted into all EMIF output signal lines.

Terminal Functions (Continued)

SIGNAL NAME	SIGNAL NO.	TYPE†	IPD/ IPU‡	DESCRIPTION
EMIFB (16-bit) − DATA‖☆				
BED15	D7	I/O/Z	IPU	EMIFB external data
BED14	B6			
BED13	C7			
BED12	A6			
BED11	D8			
BED10	B7			
BED9	C8			
BED8	A7			
BED7	C9			
BED6	B8			
BED5	D9			
BED4	B9			
BED3	C10			
BED2	A9			
BED1	D10			
BED0	B10			
MULTICHANNEL BUFFERED SERIAL PORT 2 (McBSP2)				
MCBSP2_EN	AF3	I	IPD	McBSP2 enable pin. This pin works in conjunction with the PCI_EN pin to enable/disable other peripherals (for more details, see the Device Configurations section of this data sheet).
CLKS2/GP8§	AE4	I/O/Z	IPD	McBSP2 external clock source (CLKS2) [**input only**] [default] or this pin can also be programmed as a GPIO 8 pin (**I/O/Z**).
CLKR2	AB1	I/O/Z	IPD	McBSP2 receive clock. When McBSP2 is disabled (PCI_EN pin = 1 and MCBSP2_EN pin = 0), this pin is tied-off.
CLKX2/ XSP_CLK§	AC2	I/O/Z	IPD	McBSP2 transmit clock (**I/O/Z**) [default] or PCI serial interface clock (**O**).
DR2/XSP_DI§	AB3	I	IPU	McBSP2 receive data (**I**) [default] or PCI serial interface data in (**I**). In PCI mode, this pin is connected to the output data pin of the serial PROM.
DX2/XSP_DO§	AA2	O/Z	IPU	McBSP2 transmit data (**O/Z**) [default] or PCI serial interface data out (**O**). In PCI mode, this pin is connected to the input data pin of the serial PROM.
FSR2	AC1	I/O/Z	IPD	McBSP2 receive frame sync. When McBSP2 is disabled (PCI_EN pin = 1 and MCBSP2_EN pin = 0), this pin is tied-off.
FSX2	AB2	I/O/Z	IPD	McBSP2 transmit frame sync. When McBSP2 is disabled (PCI_EN pin = 1 and MCBSP2_EN pin = 0), this pin is tied-off.

† I = Input, O = Output, Z = High impedance, S = Supply voltage, GND = Ground
‡ IPD = Internal pulldown, IPU = Internal pullup. (These IPD/IPU signal pins feature a 30-kΩ IPD or IPU resistor. To pull up a signal to the opposite supply rail, a 1-kΩ resistor should be used.)
§ These pins are multiplexed pins. For more details, see the Device Configurations section of this data sheet.
‖ These C64x™ devices have two EMIFs (64-bit EMIFA and 16-bit EMIFB). The prefix “A” in front of a signal name indicates it is an EMIFA signal whereas a prefix “B” in front of a signal name indicates it is an EMIFB signal. Throughout the rest of this document, in generic EMIF areas of discussion, the prefix “A” or “B” may be omitted from the signal name.
☆To maintain signal integrity for the EMIF signals, serial termination resistors should be inserted into all EMIF output signal lines.

Terminal Functions (Continued)

SIGNAL NAME	SIGNAL NO.	TYPE†	IPD/ IPU‡	DESCRIPTION
MULTICHANNEL BUFFERED SERIAL PORT 1 (McBSP1)				
CLKS1/ URADDR3§	AC8	I		McBSP1 external clock source (as opposed to internal) (**I**) [default] or UTOPIA receive address 3 pin (**I**)
CLKR1/ URADDR2§	AC10	I/O/Z		McBSP1 receive clock (**I/O/Z**) [default] or UTOPIA receive address 2 pin (**I**)
CLKX1/ URADDR4§	AB12	I/O/Z		McBSP1 transmit clock (**I/O/Z**) [default] or UTOPIA receive address 4 pin (**I**)
DR1/ UXADDR1§	AF11	I		McBSP1 receive data (**I**) [default] or UTOPIA transmit address 1 pin (**I**)
DX1/ UXADDR4§	AB11	I/O/Z		McBSP1 transmit data (**O/Z**) [default] or UTOPIA transmit address 4 pin (**I**)
FSR1/ UXADDR2§	AC9	I/O/Z		McBSP1 receive frame sync (**I/O/Z**) [default] or UTOPIA transmit address 2 pin (**I**)
FSX1/ UXADDR3§	AB13	I/O/Z		McBSP1 transmit frame sync (**I/O/Z**) [default] or UTOPIA transmit address 3 pin (**I**)
MULTICHANNEL BUFFERED SERIAL PORT 0 (McBSP0)				
CLKS0	F4	I	IPD	McBSP0 external clock source (as opposed to internal)
CLKR0	D1	I/O/Z	IPD	McBSP0 receive clock
CLKX0	E1	I/O/Z	IPD	McBSP0 transmit clock
DR0	D2	I	IPU	McBSP0 receive data
DX0	E2	O/Z	IPU	McBSP0 transmit data
FSR0	C1	I/O/Z	IPD	McBSP0 receive frame sync
FSX0	E3	I/O/Z	IPD	McBSP0 transmit frame sync
TIMER 2				
TOUT2	A4	O/Z	IPD	Timer 2 or general-purpose output
TINP2	C5	I	IPD	Timer 2 or general-purpose input
TIMER 1				
TOUT1	B5	O/Z	IPD	Timer 1 or general-purpose output
TINP1	A5	I	IPD	Timer 1 or general-purpose input
TIMER 0				
TOUT0	D6	O/Z	IPD	Timer 0 or general-purpose output
TINP0	C6	I	IPD	Timer 0 or general-purpose input

† I = Input, O = Output, Z = High impedance, S = Supply voltage, GND = Ground
‡ IPD = Internal pulldown, IPU = Internal pullup. (These IPD/IPU signal pins feature a 30-kΩ IPD or IPU resistor. To pull up a signal to the opposite supply rail, a 1-kΩ resistor should be used.)
§ These pins are multiplexed pins. For more details, see the Device Configurations section of this data sheet.

Terminal Functions (Continued)

SIGNAL NAME	SIGNAL NO.	TYPE†	IPD/ IPU‡	DESCRIPTION
UNIVERSAL TEST AND OPERATIONS PHY INTERFACE FOR ASYNCHRONOUS TRANSFER MODE (ATM) [UTOPIA SLAVE]				
UTOPIA SLAVE (ATM CONTROLLER) − TRANSMIT INTERFACE				
UXCLK	AD11	I	□	Source clock for UTOPIA transmit driven by Master ATM Controller. When the UTOPIA peripheral is disabled (UTOPIA_EN [BEA11 pin] = 0), this pin is tied-off.
UXCLAV	AC14	O/Z		Transmit cell available status output signal from UTOPIA Slave. 0 indicates a complete cell is NOT available for transmit 1 indicates a complete cell is available for transmit When the UTOPIA peripheral is disabled (UTOPIA_EN [BEA11 pin] = 0), this pin is tied-off.
$\overline{\text{UXENB}}$	AE15	I	◊	UTOPIA transmit interface enable input signal. Asserted by the Master ATM Controller to indicate that the UTOPIA Slave should put out on the Transmit Data Bus the first byte of valid data and the UXSOC signal in the next clock cycle. When the UTOPIA peripheral is disabled (UTOPIA_EN [BEA11 pin] = 0), this pin is tied-off.
UXSOC	AC13	O/Z		Transmit Start-of-Cell signal. This signal is output by the UTOPIA Slave on the rising edge of the UXCLK, indicating that the first valid byte of the cell is available on the 8-bit Transmit Data Bus (UXDATA[7:0]). When the UTOPIA peripheral is disabled (UTOPIA_EN [BEA11 pin] = 0), this pin is tied-off.
DX1/ UXADDR4§	AB11	I/O/Z	◊	McBSP1 [default] or UTOPIA transmit address pins As UTOPIA transmit address pins UXADDR[4:0] (**I**), UTOPIA_EN (BEA11 pin) = 1: • 5-bit Slave transmit address input pins driven by the Master ATM Controller to identify and select one of the Slave devices (up to 31 possible) in the ATM System. • UXADDR0 pin is tied off when the UTOPIA peripheral is disabled [UTOPIA_EN (BEA11 pin) = 0] For the McBSP1 pin functions (UTOPIA_EN (BEA11 pin) = 0 [default]), see the MULTICHANNEL BUFFERED SERIAL PORT 1 (McBSP1) section of this table.
FSX1/ UXADDR3§	AB13	I/O/Z	◊	McBSP1 [default] or UTOPIA transmit address pins As UTOPIA transmit address pins UXADDR[4:0] (**I**), UTOPIA_EN (BEA11 pin) = 1: • 5-bit Slave transmit address input pins driven by the Master ATM Controller to identify and select one of the Slave devices (up to 31 possible) in the ATM System. • UXADDR0 pin is tied off when the UTOPIA peripheral is disabled [UTOPIA_EN (BEA11 pin) = 0] For the McBSP1 pin functions (UTOPIA_EN (BEA11 pin) = 0 [default]), see the MULTICHANNEL BUFFERED SERIAL PORT 1 (McBSP1) section of this table.
FSR1/ UXADDR2§	AC9	I/O/Z	◊	
DR1/ UXADDR1§	AF11	I	◊	
UXADDR0	AE9	I	◊	

† I = Input, O = Output, Z = High impedance, S = Supply voltage, GND = Ground
‡ IPD = Internal pulldown, IPU = Internal pullup. (These IPD/IPU signal pins feature a 30-kΩ IPD or IPU resistor. To pull up a signal to the opposite supply rail, a 1-kΩ resistor should be used.)
§ These pins are multiplexed pins. For more details, see the Device Configurations section of this data sheet.
□ External pulldowns required: *If* UTOPIA is selected (BEA11 = 1) *and* these pins are connected to other devices, then a 10-kΩ resistor must be used to **externally** pull down each of these pins. If these pins are “no connects”, then only UXCLK and URCLK need to be pulled down and other pulldowns are not necessary.
◊ External pullups required: *If* UTOPIA is selected (BEA11 = 1) *and* these pins are connected to other devices, then a 10-kΩ resistor must be used to **externally** pull up each of these pins. If these pins are “no connects”, then the pullups are not necessary.

Terminal Functions (Continued)

SIGNAL NAME	SIGNAL NO.	TYPE†	IPD/ IPU‡	DESCRIPTION
UTOPIA SLAVE (ATM CONTROLLER) − TRANSMIT INTERFACE (CONTINUED)				
UXDATA7	AD10	O/Z		8-bit Transmit Data Bus Using the Transmit Data Bus, the UTOPIA Slave (on the rising edge of the UXCLK) transmits the 8-bit ATM cells to the Master ATM Controller. When the UTOPIA peripheral is disabled (UTOPIA_EN [BEA11 pin] = 0), these pins are tied-off.
UXDATA6	AD9			
UXDATA5	AD8			
UXDATA4	AE8			
UXDATA3	AF9			
UXDATA2	AF7			
UXDATA1	AE7			
UXDATA0	AD7			
UTOPIA SLAVE (ATM CONTROLLER) − RECEIVE INTERFACE				
URCLK	AD12	I	□	Source clock for UTOPIA receive driven by Master ATM Controller. When the UTOPIA peripheral is disabled (UTOPIA_EN [BEA11 pin] = 0), this pin is tied-off.
URCLAV	AF14	O/Z		Receive cell available status output signal from UTOPIA Slave. 0 indicates NO space is available to receive a cell from Master ATM Controller 1 indicates space is available to receive a cell from Master ATM Controller When the UTOPIA peripheral is disabled (UTOPIA_EN [BEA11 pin] = 0), this pin is tied-off.
$\overline{\text{URENB}}$	AD15	I	◊	UTOPIA receive interface enable input signal. Asserted by the Master ATM Controller to indicate to the UTOPIA Slave to sample the Receive Data Bus (URDATA[7:0]) and URSOC signal in the next clock cycle or thereafter. When the UTOPIA peripheral is disabled (UTOPIA_EN [BEA11 pin] = 0), this pin is tied-off.
URSOC	AB14	I	□	Receive Start-of-Cell signal. This signal is output by the Master ATM Controller to indicate to the UTOPIA Slave that the first valid byte of the cell is available to sample on the 8-bit Receive Data Bus (URDATA[7:0]). When the UTOPIA peripheral is disabled (UTOPIA_EN [BEA11 pin] = 0), this pin is tied-off.
CLKX1/ URADDR4§	AB12	I/O/Z	◊	McBSP1 [default] or UTOPIA receive address pins As UTOPIA receive address pins URADDR[4:0] (**I**), UTOPIA_EN (BEA11 pin) = 1: • 5-bit Slave receive address input pins driven by the Master ATM Controller to identify and select one of the Slave devices (up to 31 possible) in the ATM System. • URADDR1 and URADDR0 pins are tied off when the UTOPIA peripheral is disabled [UTOPIA_EN (BEA11 pin) = 0] For the McBSP1 pin functions (UTOPIA_EN (BEA11 pin) = 0 [default]), see the MULTICHANNEL BUFFERED SERIAL PORT 1 (McBSP1) section of this table.
CLKS1/ URADDR3§	AC8	I	◊	
CLKR1/ URADDR2§	AC10	I/O/Z	◊	
URADDR1	AF10	I	◊	
URADDR0	AE10	I	◊	

† I = Input, O = Output, Z = High impedance, S = Supply voltage, GND = Ground
‡ IPD = Internal pulldown, IPU = Internal pullup. (These IPD/IPU signal pins feature a 30-kΩ IPD or IPU resistor. To pull up a signal to the opposite supply rail, a 1-kΩ resistor should be used.)
§ These pins are multiplexed pins. For more details, see the Device Configurations section of this data sheet.
□ External pulldowns required: *If* UTOPIA is selected (BEA11 = 1) *and* these pins are connected to other devices, then a 10-kΩ resistor must be used to **externally** pull down each of these pins. If these pins are “no connects”, then only UXCLK and URCLK need to be pulled down and other pulldowns are not necessary.
◊ External pullups required: *If* UTOPIA is selected (BEA11 = 1) *and* these pins are connected to other devices, then a 10-kΩ resistor must be used to **externally** pull up each of these pins. If these pins are “no connects”, then the pullups are not necessary.

Terminal Functions (Continued)

SIGNAL NAME	SIGNAL NO.	TYPE†	IPD/ IPU‡	DESCRIPTION
UTOPIA SLAVE (ATM CONTROLLER) − RECEIVE INTERFACE (CONTINUED)				
URDATA7	AF12	I	□	8-bit Receive Data Bus. Using the Receive Data Bus, the UTOPIA Slave (on the rising edge of the URCLK) can receive the 8-bit ATM cell data from the Master ATM Controller. When the UTOPIA peripheral is disabled (UTOPIA_EN [BEA11 pin] = 0), these pins are tied-off.
URDATA6	AE11			
URDATA5	AF13			
URDATA4	AC11			
URDATA3	AC12			
URDATA2	AE12			
URDATA1	AD14			
URDATA0	AD13			
RESERVED FOR TEST				
RSV	G14			Reserved. These pins must be connected directly to CV_{DD} for proper device operation.
	H7			
	N20			
	P7			
	Y13			
RSV	R6			Reserved. This pin must be connected directly to DV_{DD} for proper device operation.
RSV	A3			Reserved (leave unconnected, ***do not*** connect to power or ground. If the signal must be routed out from the device, the internal pull−up/down resistance should not be relied upon and an external pull−up/down should be used).
	G2			
	H3			
	J4			
	K6			
	N3			
	P3			
RSV	W25		IPD	Reserved. This pin must be connected directly to V_{SS} for proper device operation.

† I = Input, O = Output, Z = High impedance, S = Supply voltage, GND = Ground

‡ IPD = Internal pulldown, IPU = Internal pullup. (These IPD/IPU signal pins feature a 30-kΩ IPD or IPU resistor. To pull up a signal to the opposite supply rail, a 1-kΩ resistor should be used.)

□ External pulldowns required: *If* UTOPIA is selected (BEA11 = 1) *and* these pins are connected to other devices, then a 10-kΩ resistor must be used to **externally** pull down each of these pins. If these pins are “no connects”, then only UXCLK and URCLK need to be pulled down and other pulldowns are not necessary.

Terminal Functions (Continued)

SIGNAL NAME	SIGNAL NO.	TYPE†	DESCRIPTION
SUPPLY VOLTAGE PINS			
DV_{DD}	A2	S	3.3-V supply voltage (see the Power-Supply Decoupling section of this data sheet)
	A25		
	B1		
	B14		
	B26		
	E7		
	E8		
	E10		
	E17		
	E19		
	E20		
	F3		
	F9		
	F12		
	F15		
	F18		
	G5		
	G22		
	H5		
	H22		
	J21		
	K5		
	K22		
	L5		
	M5		
	M6		
	M21		
	N2		
	P25		
	R5		
	R21		
	T5		
	U5		
	U22		
	V6		
	V21		
	W5		
	W22		
	Y5		
	Y22		

† I = Input, O = Output, Z = High impedance, S = Supply voltage, GND = Ground

Terminal Functions (Continued)

SIGNAL NAME	SIGNAL NO.	TYPE†	DESCRIPTION
SUPPLY VOLTAGE PINS (CONTINUED)			
DV_{DD}	AA9	S	3.3-V supply voltage (see the Power-Supply Decoupling section of this data sheet)
	AA12		
	AA15		
	AA18		
	AB7		
	AB8		
	AB10		
	AB17		
	AB19		
	AB20		
	AE1		
	AE13		
	AE26		
	AF2		
	AF25		
CV_{DD}	A1		1.1-V supply voltage (-600 device) 1.2 V supply voltage (-720 device) (see the Power-Supply Decoupling section of this data sheet)
	A26		
	B2		
	B25		
	C3		
	C24		
	D4		
	D23		
	E5		
	E22		
	F6		
	F7		
	F20		
	F21		
	G6		
	G7		
	G8		
	G10		
	G11		
	G13		
	G16		
	G17		
	G19		
	G20		

† I = Input, O = Output, Z = High impedance, S = Supply voltage, GND = Ground

Terminal Functions (Continued)

SIGNAL NAME	SIGNAL NO.	TYPE†	DESCRIPTION
SUPPLY VOLTAGE PINS (CONTINUED)			
CV_{DD}	G21	S	1.1-V supply voltage (-600 device) 1.2 V supply voltage (-720 device) (see the Power-Supply Decoupling section of this data sheet)
	H20		
	K7		
	K20		
	L7		
	L20		
	N7		
	P20		
	T7		
	T20		
	U7		
	U20		
	W7		
	W20		
	Y6		
	Y7		
	Y8		
	Y10		
	Y11		
	Y14		
	Y16		
	Y17		
	Y19		
	Y20		
	Y21		
	AA6		
	AA7		
	AA20		
	AA21		
	AB5		
	AB22		
	AC4		
	AC23		
	AD3		
	AD24		
	AE2		
	AE25		
	AF1		
	AF26		

† I = Input, O = Output, Z = High impedance, S = Supply voltage, GND = Ground

Terminal Functions (Continued)

SIGNAL NAME	SIGNAL NO.	TYPE†	DESCRIPTION
GROUND PINS			
V_{SS}	A8	GND	Ground pins
	A19		
	B3		
	B13		
	B24		
	C2		
	C4		
	C23		
	C25		
	D3		
	D5		
	D22		
	D24		
	E4		
	E6		
	E9		
	E18		
	E21		
	E23		
	F5		
	F8		
	F10		
	F11		
	F13		
	F14		
	F16		
	F17		
	F19		
	F22		
	G9		
	G12		
	G15		
	G18		
	H1		
	H6		
	H21		
	H26		
	J5		
	J7		

† I = Input, O = Output, Z = High impedance, S = Supply voltage, GND = Ground

Terminal Functions (Continued)

SIGNAL NAME	SIGNAL NO.	TYPE†	DESCRIPTION
GROUND PINS (CONTINUED)			
V_{SS}	J20	GND	Ground pins
	J22		
	K21		
	L6		
	L21		
	M7		
	M20		
	N6		
	N21		
	N25		
	P2		
	P6		
	P21		
	R7		
	R20		
	T6		
	T21		
	U6		
	U21		
	V5		
	V7		
	V20		
	V22		
	W1		
	W6		
	W21		
	W26		
	Y9		
	Y12		
	Y15		
	Y18		
	AA5		
	AA8		
	AA10		
	AA11		
	AA13		
	AA14		
	AA16		
	AA17		

† I = Input, O = Output, Z = High impedance, S = Supply voltage, GND = Ground

Terminal Functions (Continued)

SIGNAL NAME	SIGNAL NO.	TYPE†	DESCRIPTION
GROUND PINS (CONTINUED)			
V_{SS}	AA19	GND	Ground pins
	AA22		
	AB4		
	AB6		
	AB9		
	AB18		
	AB21		
	AB23		
	AC3		
	AC5		
	AC22		
	AC24		
	AD2		
	AD4		
	AD23		
	AD25		
	AE3		
	AE14		
	AE24		
	AF8		
	AF19		

† I = Input, O = Output, Z = High impedance, S = Supply voltage, GND = Ground

development support

TI offers an extensive line of development tools for the TMS320C6000™ DSP platform, including tools to evaluate the performance of the processors, generate code, develop algorithm implementations, and fully integrate and debug software and hardware modules.

The following products support development of C6000™ DSP-based applications:

Software Development Tools:
Code Composer Studio™ Integrated Development Environment (IDE): including Editor
C/C++/Assembly Code Generation, and Debug plus additional development tools
Scalable, Real-Time Foundation Software (DSP/BIOS™), which provides the basic run-time target software needed to support any DSP application.

Hardware Development Tools:
Extended Development System (XDS™) Emulator (supports C6000™ DSP multiprocessor system debug)
EVM (Evaluation Module)

For a complete listing of development-support tools for the TMS320C6000™ DSP platform, visit the Texas Instruments web site on the Worldwide Web at http://www.ti.com uniform resource locator (URL). For information on pricing and availability, contact the nearest TI field sales office or authorized distributor.

Code Composer Studio, DSP/BIOS, and XDS are trademarks of Texas Instruments.

device support

device and development-support tool nomenclature

To designate the stages in the product development cycle, TI assigns prefixes to the part numbers of all DSP devices and support tools. Each DSP commercial family member has one of three prefixes: TMX, TMP, or TMS. (e.g., **TMS**320TCI100GLZ7) Texas Instruments recommends two of three possible prefix designators for its support tools: TMDX and TMDS. These prefixes represent evolutionary stages of product development from engineering prototypes (TMX/TMDX) through fully qualified production devices/tools (TMS/TMDS).

Device development evolutionary flow:

TMX Experimental device that is not necessarily representative of the final device's electrical specifications

TMP Final silicon die that conforms to the device's electrical specifications but has not completed quality and reliability verification

TMS Fully qualified production device

Support tool development evolutionary flow:

TMDX Development-support product that has not yet completed Texas Instruments internal qualification testing

TMDS Fully qualified development-support product

TMX and TMP devices and TMDX development-support tools are shipped against the following disclaimer:

"Developmental product is intended for internal evaluation purposes."

TMS devices and TMDS development-support tools have been characterized fully, and the quality and reliability of the device have been demonstrated fully. TI's standard warranty applies.

Predictions show that prototype devices (TMX or TMP) have a greater failure rate than the standard production devices. Texas Instruments recommends that these devices not be used in any production system because their expected end-use failure rate still is undefined. Only qualified production devices are to be used.

TI device nomenclature also includes a suffix with the device family name. This suffix indicates the package type (for example, GLZ), the temperature range (for example, blank is the default commercial temperature range), and the device speed range in megahertz (for example, -7 is 720-MHz). Figure 5 provides a legend for reading the complete device name for any TMS320C64x™ DSP generation member.

The ZLZ package, like the GLZ package, is a 532-ball plastic BGA, with the only difference being that the ZLZ package has Pb-free package balls. The CLZ is the Pb−Free die bump and solder ball version of GLZ and ZLZ. For device part numbers and further ordering information for TMS320TCI100 in the GLZ, ZLZ and CLZ package types, see the TI website (http://www.ti.com) or contact your TI sales representative.

device and development-support tool nomenclature (continued)

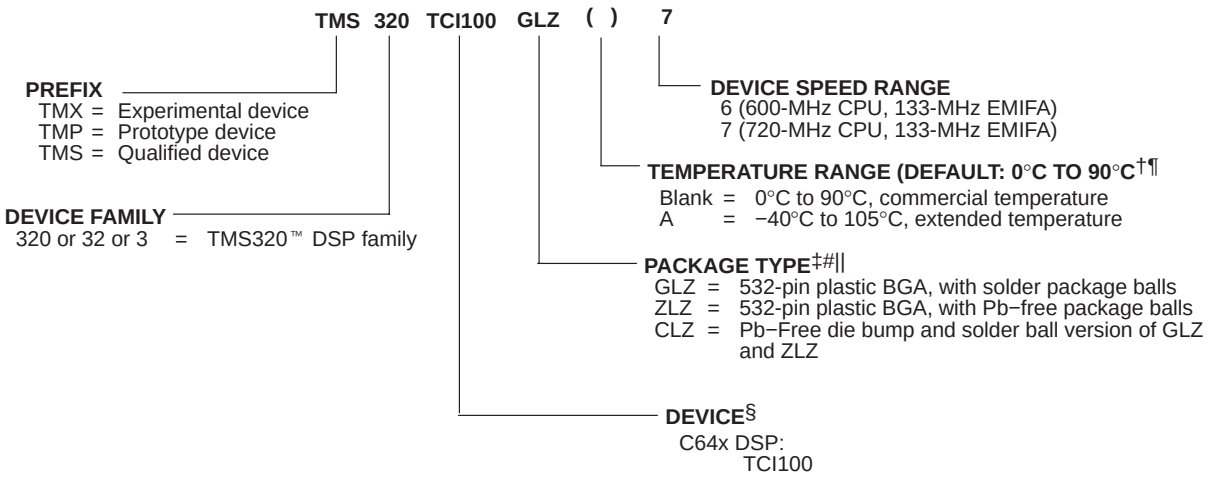

† The extended temperature "A version" devices may have different operating conditions than the commercial temperature devices. See the Recommended Operating Conditions section of this data sheet for more details.
‡ BGA = Ball Grid Array
§ For the actual device part numbers (P/Ns) and ordering information, see the TI website (www.ti.com).
¶ See the Recommended Operating Conditions section of this data sheet for more details.
# The ZLZ mechanical package designator represents the version of the GLZ with Pb−Free package balls.
|| The CLZ mechanical package designator represents the version of the GLZ and ZLZ with Pb−Free die bump and solder balls.

Figure 5. TMS320C64x™ DSP Device Nomenclature (Including the TCI100 Device)

For additional information, see the *TMS320TCI100 Digital Signal Processor Silicon Errata* (literature number SPRZ210).

documentation support

Extensive documentation supports all TMS320™ DSP family generations of devices from product announcement through applications development. The types of documentation available include: data sheets, such as this document, with design specifications; complete user's reference guides for all devices and tools; technical briefs; development-support tools; on-line help; and hardware and software applications. The following is a brief, descriptive list of support documentation specific to the C6000™ DSP devices:

The *TMS320C6000 CPU and Instruction Set Reference Guide* (literature number SPRU189) describes the C6000™ DSP CPU (core) architecture, instruction set, pipeline, and associated interrupts.

The *TMS320C6000 DSP Peripherals Overview Reference Guide* (literature number SPRU190) provides an overview and briefly describes the functionality of the peripherals available on the C6000™ DSP platform of devices. This document also includes a table listing the peripherals available on the C6000 devices along with literature numbers and hyperlinks to the associated peripheral documents.

The *TMS320C64x Technical Overview* (literature number SPRU395) gives an introduction to the C64x™ digital signal processor, and discusses the application areas that are enhanced by the C64x™ DSP VelociTI.2™ VLIW architecture.

The *TMS320TCI1x UMTS Infrastructure Chipset* Product Bulletin (literature number SPRT263) provides an overview of the TMS320TCI1x platform, system architecture, the TMS320TCI110 and TMS320TCI120 Application-Specific Standard Processors (ASSPs), and the TMS320TCI1x platform software.

The *TMS320TCI110 Hardware Accelerator* data sheet (literature number SPRS120) describes the features of the TMS320TCI110 receive chip-rate application-specific standard processor (ASSP) and provides pinouts, electrical specifications, and timings for the device. This document is currently under TI NDA control; therefore, it is *not* available on the Internet. If you are interested in obtaining a copy or would like additional information, please contact your local TI Sales Representative.

The *TMS320TCI120 Hardware Accelerator* data sheet (literature number SPRS121) describes the features of the TMS320TCI120 transmit chip-rate ASSP and provides pinouts, electrical specifications, and timings for the device. This document is currently under TI NDA control; therefore, it is *not* available on the Internet. If you are interested in obtaining a copy or would like additional information, please contact your local TI Sales Representative.

The *TMS320TCI100 Digital Signal Processor Silicon Errata* (literature number SPRZ210) describes the known exceptions to the functional specifications for the TMS320TCI100 device.

The *Using IBIS Models for Timing Analysis* application report (literature number SPRA839) describes how to properly use IBIS models to attain accurate timing analysis for a given system.

For more detailed information on the device compatibility, similarities/differences, and migration from a TMS320C6416 device to the TMS320TCI100 device, see the *Migrating From TMS320C6416 to TMS320TCI100* application report (literature number SPRA897).

The tools support documentation is electronically available within the Code Composer Studio™ Integrated Development Environment (IDE). For a complete listing of C6000™ DSP latest documentation, visit the Texas Instruments web site on the Worldwide Web at http://www.ti.com uniform resource locator (URL).

clock PLL

Most of the internal C64x™ DSP clocks are generated from a single source through the CLKIN pin. This source clock either drives the PLL, which multiplies the source clock frequency to generate the internal CPU clock, or bypasses the PLL to become the internal CPU clock.

To use the PLL to generate the CPU clock, the external PLL filter circuit must be properly designed. Figure 6 shows the external PLL circuitry for either x1 (PLL bypass) or other PLL multiply modes.

To ensure proper operation of the PLL, a specified power-on reset sequence must be followed. For more detail on the specified power-on reset sequence, see the power-supply sequencing section of this data sheet.

To minimize the clock jitter, a single clean power supply should power both the C64x™ DSP device and the external clock oscillator circuit. The minimum CLKIN rise and fall times should also be observed. For the input clock timing requirements, see the *input and output clocks* electricals section.

Rise/fall times, duty cycles (high/low pulse durations), and the load capacitance of the external clock source must meet the DSP requirements in this data sheet (see the *electrical characteristics over recommended ranges of supply voltage and operating case temperature* table and the *input and output clocks* electricals section). Table 29 lists some examples of compatible CLKIN external clock sources:

Table 29. Compatible CLKIN External Clock Sources

COMPATIBLE PARTS FOR EXTERNAL CLOCK SOURCES (CLKIN)	PART NUMBER	MANUFACTURER
Oscillators	JITO-2	Fox Electronix
	STA series, ST4100 series	SaRonix Corporation
	SG-636	Epson America
	342	Corning Frequency Control
PLL	ICS525-02	Integrated Circuit Systems

clock PLL (continued)

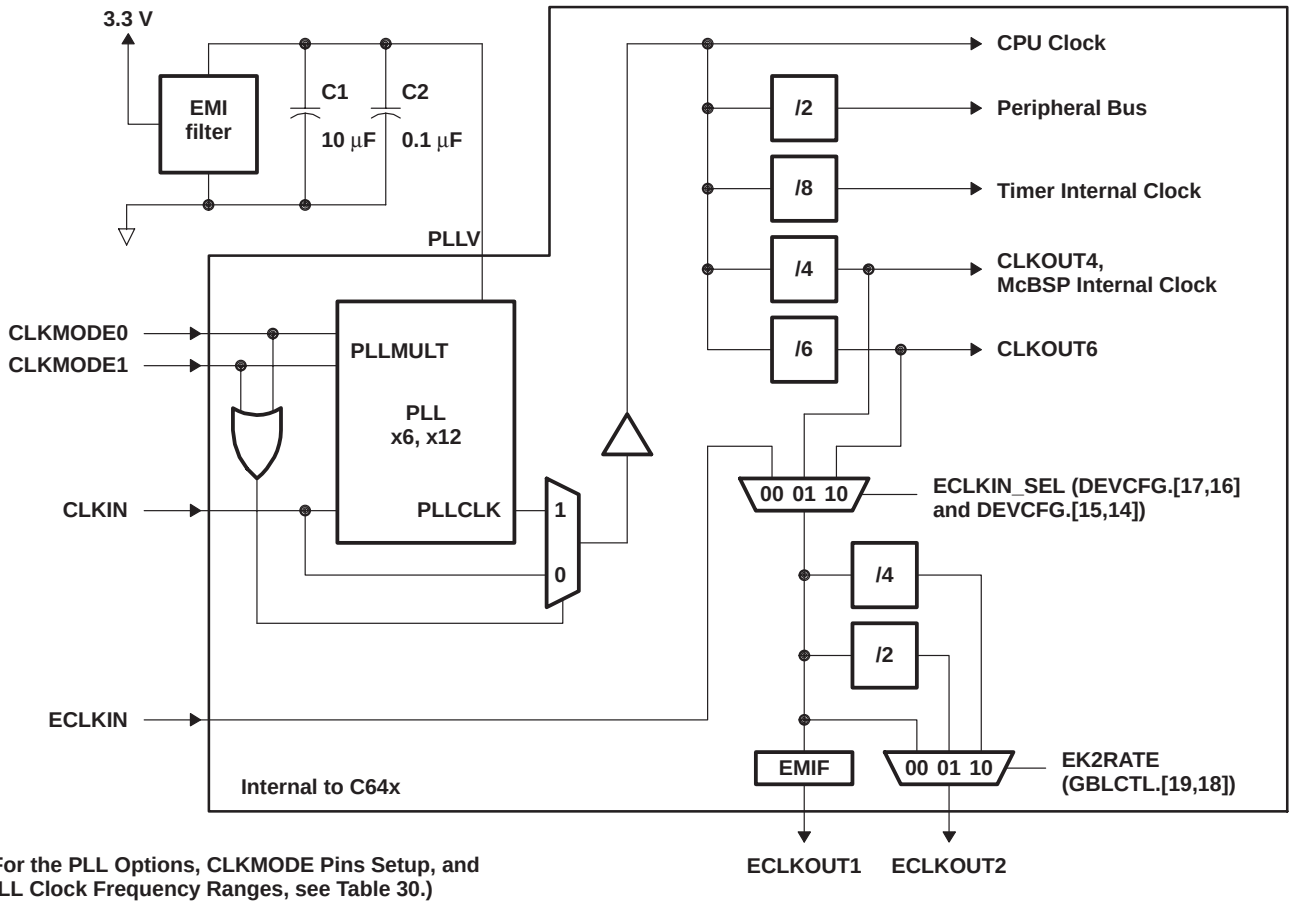

(For the PLL Options, CLKMODE Pins Setup, and PLL Clock Frequency Ranges, see Table 30.)

NOTES: A. Place all PLL external components (C1, C2, and the EMI Filter) as close to the C6000™ DSP device as possible. For the best performance, TI recommends that all the PLL external components be on a single side of the board without jumpers, switches, or components other than the ones shown.

B. For reduced PLL jitter, maximize the spacing between switching signals and the PLL external components (C1, C2, and the EMI Filter).

C. The 3.3-V supply for the EMI filter must be from the same 3.3-V power plane supplying the I/O voltage, DV_{DD}.

D. EMI filter manufacturer TDK part number ACF451832-333, -223, -153, -103. Panasonic part number EXCCET103U.

Figure 6. External PLL Circuitry for Either PLL Multiply Modes or x1 (Bypass) Mode

clock PLL (continued)

Table 30. TMS320C64x PLL Multiply Factor Options, Clock Frequency Ranges, and Typical Lock Time†‡

GLZ, ZLZ and CLZ PACKAGES − 23 x 23 mm BGA							
CLKMODE1	CLKMODE0	CLKMODE (PLL MULTIPLY FACTORS)	CLKIN RANGE (MHz)	CPU CLOCK FREQUENCY RANGE (MHz)	CLKOUT4 RANGE (MHz)	CLKOUT6 RANGE (MHz)	TYPICAL LOCK TIME (µs)§
0	0	Bypass (x1)	0−100	42−75	10.5−18.75	7−12.5	N/A
0	1	x6	42−75	252−450	63−112.5	42−75	75
1	0	x12	42−75	504−720	126−180	84−120	
1	1	Reserved	−	−	−	−	−

† These clock frequency range values are applicable to a C64x−600 and -720 speed devices. For more detailed information, see the CLKIN timing requirements table for the specific device speed.

‡ Use external pullup resistors on the CLKMODE pins (CLKMODE1 and CLKMODE0) to set the C64x device to one of the valid PLL multiply clock modes (x6 or x12). With internal pulldown resistors on the CLKMODE pins (CLKMODE1, CLKMODE0), the default clock mode is x1 (bypass).

§ Under some operating conditions, the maximum PLL lock time may vary by as much as 150% from the specified typical value. For example, if the typical lock time is specified as 100 µs, the maximum value may be as long as 250 µs.

general-purpose input/output (GPIO)

To use the GP[15:0] software-configurable GPIO pins, the GPxEN bits in the GP Enable (GPEN) Register and the GPxDIR bits in the GP Direction (GPDIR) Register must be properly configured.

GPxEN = 1 GP[x] pin is enabled

GPxDIR = 0 GP[x] pin is an input

GPxDIR = 1 GP[x] pin is an output

where “x” represents one of the 15 through 0 GPIO pins

Figure 7 shows the GPIO enable bits in the GPEN register for the TMS320TCI100 device. To use any of the GPx pins as general-purpose input/output functions, the corresponding GPxEN bit must be set to “1” (enabled). Default values are device-specific, so refer to Figure 7 for the TCI100 default configuration.

31 – 24	23 – 16
Reserved	
R-0	

15	14	13	12	11	10	9	8	7	6	5	4	3	2	1	0
GP15 EN	GP14 EN	GP13 EN	GP12 EN	GP11 EN	GP10 EN	GP9 EN	GP8 EN	GP7 EN	GP6 EN	GP5 EN	GP4 EN	GP3 EN	GP2 EN	GP1 EN	GP0 EN
R/W-0	R/W-0	R/W-0	R/W-0	R/W-0	R/W-0	R/W-0	R/W-0	R/W-1	R/W-1	R/W-1	R/W-1	R/W-1	R/W-0	R/W-0	R/W-1

Legend: R/W = Readable/Writeable; -*n* = value after reset, -x = undefined value after reset

Figure 7. GPIO Enable Register (GPEN) [Hex Address: 01B0 0000]

Figure 8 shows the GPIO direction bits in the GPDIR register. This register determines if a given GPIO pin is an input or an output providing the corresponding GPxEN bit is enabled (set to “1”) in the GPEN register. By default, all the GPIO pins are configured as input pins.

31 – 24	23 – 16
Reserved	
R-0	

15	14	13	12	11	10	9	8	7	6	5	4	3	2	1	0
GP15 DIR	GP14 DIR	GP13 DIR	GP12 DIR	GP11 DIR	GP10 DIR	GP9 DIR	GP8 DIR	GP7 DIR	GP6 DIR	GP5 DIR	GP4 DIR	GP3 DIR	GP2 DIR	GP1 DIR	GP0 DIR
R/W-0	R/W-0	R/W-0	R/W-0	R/W-0	R/W-0	R/W-0	R/W-0	R/W-0	R/W-0	R/W-0	R/W-0	R/W-0	R/W-0	R/W-0	R/W-0

Legend: R/W = Readable/Writeable; -*n* = value after reset, -x = undefined value after reset

Figure 8. GPIO Direction Register (GPDIR) [Hex Address: 01B0 0004]

For more detailed information on general-purpose inputs/outputs (GPIOs), see the *TMS320C6000 DSP General-Purpose Input/Output (GPIO) Reference Guide* (literature number SPRU584).

power-down mode logic

Figure 9 shows the power-down mode logic on the TMS320TCI100.

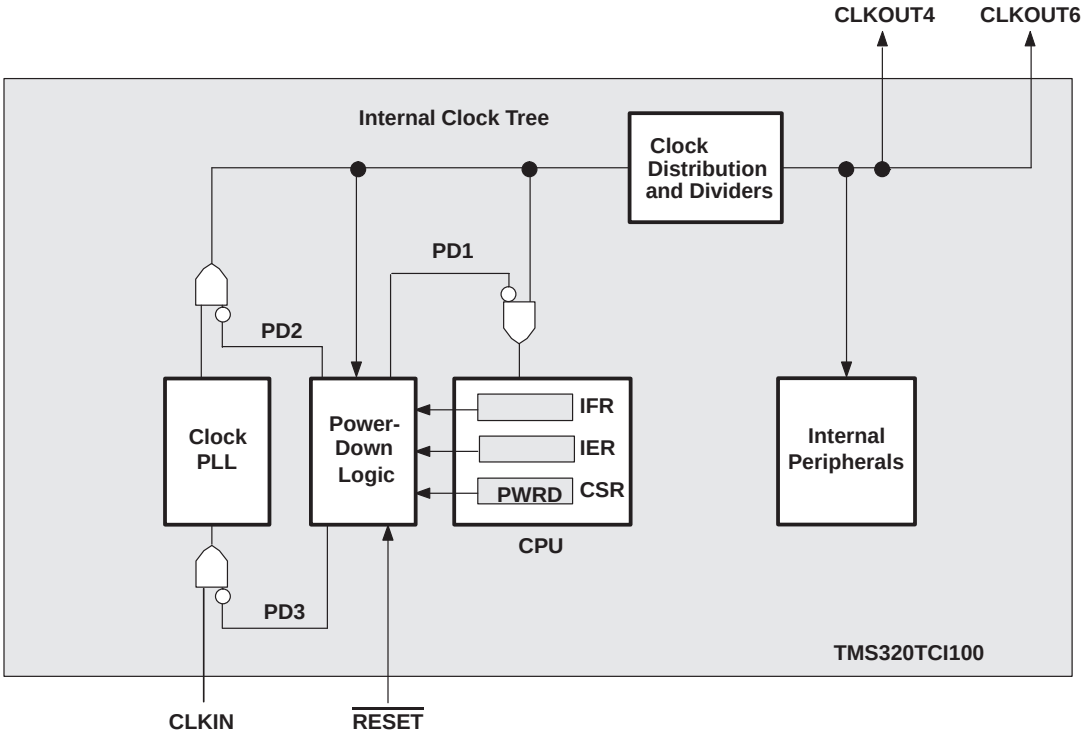

† External input clocks, with the exception of CLKIN, are *not* gated by the power-down mode logic.

Figure 9. Power-Down Mode Logic†

triggering, wake-up, and effects

The power-down modes and their wake-up methods are programmed by setting the PWRD field (bits 15−10) of the control status register (CSR). The PWRD field of the CSR is shown in Figure 10 and described in Table 31. When writing to the CSR, all bits of the PWRD field should be set at the same time. Logic 0 should be used when writing to the reserved bit (bit 15) of the PWRD field. The CSR is discussed in detail in the *TMS320C6000 CPU and Instruction Set Reference Guide* (literature number SPRU189).

31							16

15	14	13	12	11	10	9	8
Reserved	Enable or Non-Enabled Interrupt Wake	Enabled Interrupt Wake	PD3	PD2	PD1		
R/W-0	R/W-0	R/W-0	R/W-0	R/W-0	R/W-0		

7							0

Legend: R/W−x = Read/write reset value

NOTE: The shadowed bits are not part of the power-down logic discussion and therefore are not covered here. For information on these other bit fields in the CSR register, see the *TMS320C6000 CPU and Instruction Set Reference Guide* (literature number SPRU189).

Figure 10. PWRD Field of the CSR Register

Power-down mode PD1 takes effect eight to nine clock cycles after the instruction that sets the PWRD bits in the CSR. If PD1 mode is terminated by a non-enabled interrupt, the program execution returns to the instruction where PD1 took effect. If PD1 mode is terminated by an enabled interrupt, the interrupt service routine will be executed first, then the program execution returns to the instruction where PD1 took effect.

PD2 and PD3 modes can only be aborted by device reset. Table 31 summarizes all the power-down modes.

Table 31. Characteristics of the Power-Down Modes

PRWD FIELD (BITS 15−10)	POWER-DOWN MODE	WAKE-UP METHOD	EFFECT ON CHIP'S OPERATION
000000	No power-down	—	—
001001	PD1	Wake by an enabled interrupt	CPU halted (except for the interrupt logic) Power-down mode blocks the internal clock inputs at the boundary of the CPU, preventing most of the CPU's logic from switching. During PD1, EDMA transactions can proceed between peripherals and internal memory.
010001	PD1	Wake by an enabled or non-enabled interrupt	
011010	PD2†	Wake by a device reset	Output clock from PLL is halted, stopping the internal clock structure from switching and resulting in the entire chip being halted. All register and internal RAM contents are preserved. All functional I/O "freeze" in the last state when the PLL clock is turned off.
011100	PD3†	Wake by a device reset	Input clock to the PLL stops generating clocks. All register and internal RAM contents are preserved. All functional I/O "freeze" in the last state when the PLL clock is turned off. Following reset, the PLL needs time to re-lock, just as it does following power-up. Wake-up from PD3 takes longer than wake-up from PD2 because the PLL needs to be re-locked, just as it does following power-up.
All others	Reserved	—	—

† When entering PD2 and PD3, all functional I/O remains in the previous state. However, for peripherals which are asynchronous in nature or peripherals with an external clock source, output signals may transition in response to stimulus on the inputs. Under these conditions, peripherals will not operate according to specifications.

C64x power-down mode with an emulator

If user power-down modes are programmed, and an emulator is attached, the modes will be masked to allow the emulator access to the system. This condition prevails until the emulator is reset or the cable is removed from the header. If power measurements are to be performed when in a power-down mode, the emulator cable should be removed.

When the DSP is in power-down mode PD2 or PD3, emulation logic will force any emulation execution command (such as Step or Run) to spin in IDLE. For this reason, PC writes (such as loading code) will fail. A DSP reset will be required to get the DSP out of PD2/PD3.

power-supply sequencing

TI DSPs do not require specific power sequencing between the core supply and the I/O supply. However, systems should be designed to ensure that neither supply is powered up for extended periods of time (>1 second) if the other supply is below the proper operating voltage.

In addition, for proper device initialization, device reset ($\overline{\text{RESET}}$) must be held active (low) during device power ramp and should not be released until the PLL becomes stable.

power-supply design considerations

A dual-power supply with simultaneous sequencing can be used to eliminate the delay between core and I/O power up. A Schottky diode can also be used to tie the core rail to the I/O rail (see Figure 11).

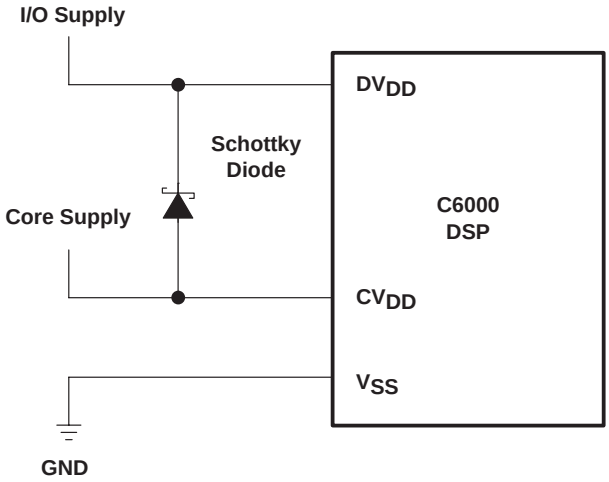

Figure 11. Schottky Diode Diagram

Core and I/O supply voltage regulators should be located close to the DSP (or DSP array) to minimize inductance and resistance in the power delivery path. Additionally, when designing for high-performance applications utilizing the C6000™ platform of DSPs, the PC board should include separate power planes for core, I/O, and ground, all bypassed with high-quality low-ESL/ESR capacitors.

power-supply decoupling

In order to properly decouple the supply planes from system noise, place as many capacitors (caps) as possible close to the DSP. Assuming 0603 caps, the user should be able to fit a total of 60 caps, 30 for the core supply and 30 for the I/O supply. These caps need to be close to the DSP power pins, no more than 1.25 cm maximum distance to be effective. Physically smaller caps, such as 0402, are better because of their lower parasitic inductance. Proper capacitance values are also important. Small bypass caps (near 560 pF) should be closest to the power pins. Medium bypass caps (220 nF or as large as can be obtained in a small package) should be next closest. TI recommends no less than 8 small and 8 medium caps per supply (32 total) be placed immediately next to the BGA vias, using the “interior” BGA space and at least the corners of the “exterior”.

Eight larger caps (4 for each supply) can be placed further away for bulk decoupling. Large bulk caps (on the order of 100 µF) should be furthest away (but still as close as possible). No less than 4 large caps per supply (8 total) should be placed outside of the BGA.

Any cap selection needs to be evaluated from a yield/manufacturing point-of-view. As with the selection of any component, verification of capacitor availability over the product’s production lifetime should be considered.

IEEE 1149.1 JTAG compatibility statement

The TMS320TCI100 DSP requires that both $\overline{\text{TRST}}$ and $\overline{\text{RESET}}$ be asserted upon power up to be properly initialized. While $\overline{\text{RESET}}$ initializes the DSP core, $\overline{\text{TRST}}$ initializes the DSP’s emulation logic. Both resets are required for proper operation.

While both $\overline{\text{TRST}}$ and $\overline{\text{RESET}}$ need to be asserted upon power up, only $\overline{\text{RESET}}$ needs to be released for the DSP to boot properly. $\overline{\text{TRST}}$ may be asserted indefinitely for normal operation, keeping the JTAG port interface and DSP’s emulation logic in the reset state.

$\overline{\text{TRST}}$ only needs to be released when it is necessary to use a JTAG controller to debug the DSP or exercise the DSP’s boundary scan functionality. Note: $\overline{\text{TRST}}$ is synchronous and ***must*** be clocked by TCLK; otherwise, BSCAN may not respond as expected after $\overline{\text{TRST}}$ is asserted.

$\overline{\text{RESET}}$ must be released only in order for boundary-scan JTAG to read the variant field of IDCODE correctly. Other boundary-scan instructions work correctly independent of current state of $\overline{\text{RESET}}$.

For maximum reliability, the TMS320TCI100 DSP includes an internal pulldown (IPD) on the $\overline{\text{TRST}}$ pin to ensure that $\overline{\text{TRST}}$ will always be asserted upon power up and the DSP’s internal emulation logic will always be properly initialized.

JTAG controllers from Texas Instruments actively drive $\overline{\text{TRST}}$ high. However, some third-party JTAG controllers may not drive $\overline{\text{TRST}}$ high but expect the use of a pullup resistor on $\overline{\text{TRST}}$.

When using this type of JTAG controller, assert $\overline{\text{TRST}}$ to initialize the DSP after powerup and externally drive $\overline{\text{TRST}}$ high before attempting any emulation or boundary scan operations. Following the release of $\overline{\text{RESET}}$, the low-to-high transition of $\overline{\text{TRST}}$ must be “seen” to latch the state of EMU1 and EMU0. The EMU[1:0] pins configure the device for either Boundary Scan mode or Emulation mode. For more detailed information, see the terminal functions section of this data sheet.

EMIF device speed

The rated EMIF speed, referring to both EMIFA and EMIFB, of these devices only applies to the SDRAM interface when in a system that meets the following requirements:

- 1 chip-enable (CE) space (maximum of 2 chips) of SDRAM connected to EMIF
- up to 1 CE space of buffers connected to EMIF
- EMIF trace lengths between 1 and 3 inches
- 166-MHz SDRAM for 133-MHz operation (applies only to EMIFA)
- 143-MHz SDRAM for 100-MHz operation

Timing analysis must be done to verify all AC timings are met for all configurations. Verification of AC timings is mandatory when using configurations other than those specified above. TI recommends utilizing I/O buffer information specification (IBIS) to analyze all AC timings.

To properly use IBIS models to attain accurate timing analysis for a given system, see the *Using IBIS Models for Timing Analysis* application report (literature number SPRA839).

To maintain signal integrity, serial termination resistors should be inserted into all EMIF output signal lines (see the Terminal Functions table for the EMIF output signals).

bootmode

The TCI100 device resets using the active-low signal $\overline{\text{RESET}}$. While $\overline{\text{RESET}}$ is low, the device is held in reset and is initialized to the prescribed reset state. Refer to reset timing for reset timing characteristics and states of device pins during reset. The release of $\overline{\text{RESET}}$ starts the processor running with the prescribed device configuration and boot mode.

The TCI100 has three types of boot modes:

- Host boot

  If host boot is selected, upon release of $\overline{\text{RESET}}$, the CPU is internally “stalled” while the remainder of the device is released. During this period, an external host can initialize the CPU’s memory space as necessary through the host interface, including internal configuration registers, such as those that control the EMIF or other peripherals. For the TCI100 device, the HPI peripheral is used for host boot if PCI_EN = 0, and the PCI peripheral is used for host boot if PCI_EN = 1. Once the host is finished with all necessary initialization, it must set the DSPINT bit in the HPIC register to complete the boot process. This transition causes the boot configuration logic to bring the CPU out of the “stalled” state. The CPU then begins execution from address 0. The DSPINT condition is not latched by the CPU, because it occurs while the CPU is still internally “stalled”. Also, DSPINT brings the CPU out of the “stalled” state only if the host boot process is selected. All memory may be written to and read by the host. This allows for the host to verify what it sends to the DSP if required. After the CPU is out of the “stalled” state, the CPU needs to clear the DSPINT, otherwise, no more DSPINTs can be received.

- EMIF boot (using default ROM timings)

  Upon the release of $\overline{\text{RESET}}$, the 1K-Byte ROM code located in the beginning of $\overline{\text{CE1}}$ is copied to address 0 by the EDMA using the default ROM timings, while the CPU is internally “stalled”. The data should be stored in the endian format that the system is using. In this case, the EMIF automatically assembles consecutive 8-bit bytes to form the 32-bit instruction words to be copied. The transfer is automatically done by the EDMA as a single-frame block transfer from the ROM to address 0. After completion of the block transfer, the CPU is released from the “stalled” state and starts running from address 0.

- No boot

  With no boot, the CPU begins direct execution from the memory located at address 0. Note: operation is undefined if invalid code is located at address 0.

reset

A hardware reset ($\overline{\text{RESET}}$) is required to place the DSP into a known good state out of power-up. The $\overline{\text{RESET}}$ signal can be asserted (pulled low) prior to ramping the core and I/O voltages or after the core and I/O voltages have reached their proper operating conditions. As a best practice, reset should be held low during power-up. Prior to deasserting $\overline{\text{RESET}}$ (low-to-high transition), the core and I/O voltages should be at their proper operating conditions and CLKIN should also be running at the correct frequency.

absolute maximum ratings over operating case temperature range (unless otherwise noted)†

Supply voltage ranges: CV_{DD} (see Note 1) . . . . . − 0.5 V to 1.5 V
DV_{DD} (see Note 1) . . . . . −0.5 V to 4.4 V
Input voltage ranges: (except PCI), V_I . . . . . −0.5 V to 4.4 V
(PCI), V_{IP} . . . . . −0.5 V to DV_{DD} + 0.5 V
Output voltage ranges: (except PCI), V_O . . . . . −0.5 V to 4.4 V
(PCI), V_{OP} . . . . . −0.5 V to DV_{DD} + 0.5 V
Operating case temperature ranges, T_C: (default) . . . . . 0°C to 90°C
(A version) [A-600 and A-720 devices] . . . . . −40°C to105°C
Storage temperature range, T_{stg} . . . . . −65°C to 150°C

† Stresses beyond those listed under “absolute maximum ratings” may cause permanent damage to the device. These are stress ratings only, and functional operation of the device at these or any other conditions beyond those indicated under “recommended operating conditions” is not implied. Exposure to absolute-maximum-rated conditions for extended periods may affect device reliability.

NOTE 1: All voltage values are with respect to V_{SS}.

recommended operating conditions

			MIN	NOM	MAX	UNIT
CV_{DD}	Supply voltage, Core (-600 devices)‡		1.05	1.1	1.16	V
CV_{DD}	Supply voltage, Core (-720 devices)‡		1.16	1.2	1.24	V
DV_{DD}	Supply voltage, I/O		3.14	3.3	3.46	V
V_{SS}	Supply ground		0	0	0	V
V_{IH}	High-level input voltage (except PCI)		2			V
V_{IL}	Low-level input voltage (except PCI)				0.8	V
V_{IP}	Input voltage (PCI)		−0.5		DV_{DD} + 0.5	V
V_{IHP}	High-level input voltage (PCI)		$0.5DV_{DD}$		DV_{DD} + 0.5	V
V_{ILP}	Low-level input voltage (PCI)		−0.5		$0.3DV_{DD}$	V
T_C	Operating case temperature	Commercial temperature devices	0		90	°C
V_{OS}	Maximum voltage during overshoot/undershoot		−1.0§		4.3§	V
T_C	Operating case temperature	Extended temperature devices [A−600 and A−720]	-40		105	°C

‡ Future variants of the C641xT and TCI100 DSPs may operate at voltages ranging from 1.0 V to 1.2 V to provide a range of system power/performance options. TI highly recommends that users design-in a supply that can handle multiple voltages within this range (with ± 3% tolerances) by implementing simple board changes such as reference resistor values or input pin configuration modifications. Examples of such supplies include the PT5406, PT5815, PT6476, PT6505, and PT6719 series from Power Trends, a subsidiary of Texas Instruments. Not incorporating a flexible supply may limit the system’s ability to easily adapt to future versions of C641xT and TCI100 devices.

§ The absolute maximum ratings should *not* be exceeded for more than 30% of the cycle period.

electrical characteristics over recommended ranges of supply voltage and operating case temperature (unless otherwise noted)

PARAMETER		TEST CONDITIONS†		MIN	TYP	MAX	UNIT
V_{OH}	High-level output voltage (except PCI)	DV_{DD} = MIN,	I_{OH} = MAX	2.4			V
V_{OHP}	High-level output voltage (PCI)	I_{OHP} = −0.5 mA,	DV_{DD} = 3.3 V	0.9DV_{DD}¶			V
V_{OL}	Low-level output voltage (except PCI)	DV_{DD} = MIN,	I_{OL} = MAX			0.4	V
V_{OLP}	Low-level output voltage (PCI)	I_{OLP} = 1.5 mA,	DV_{DD} = 3.3 V			0.1DV_{DD}¶	V
I_I	Input current (except PCI) [DC]	$V_I = V_{SS}$ to DV_{DD} no opposing internal resistor				±1	uA
		$V_I = V_{SS}$ to DV_{DD} opposing internal pullup resistor‡		−150	−100	−50	uA
		$V_I = V_{SS}$ to DV_{DD} opposing internal pulldown resistor‡		50	100	150	uA
I_{IP}	Input leakage current (PCI) [DC]§	$0 < V_{IP} < DV_{DD}$ = 3.3 V				±10	uA
I_{OH}	High-level output current [DC]	EMIF, CLKOUT4, CLKOUT6, EMUx				−8	mA
		Timer, UTOPIA, TDO, GPIO (Excluding GP[15:9, 2, 1]), McBSP				−4	mA
		PCI/HPI				−0.5¶	mA
I_{OL}	Low-level output current [DC]	EMIF, CLKOUT4, CLKOUT6, EMUx				8	mA
		Timer, UTOPIA, TDO, GPIO (Excluding GP[15:9, 2, 1]), McBSP				4	mA
		PCI/HPI				1.5¶	mA
I_{OZ}	Off-state output current [DC]	$V_O = DV_{DD}$ or 0 V				±20	uA
I_{CDD}	Core supply current#	CV_{DD} = 1.2 V, CPU clock = 720 MHz			713		mA
		CV_{DD} = 1.2 V, CPU clock = 1 GHz			952		mA
		CV_{DD} = 1.1 V, CPU clock = 600 MHz			558		mA
I_{DDD}	I/O supply current#	DV_{DD} = 3.3 V, CPU clock = 720 MHz			151		mA
C_i	Input capacitance					2	pF
C_o	Output capacitance					3	pF

† For test conditions shown as MIN, MAX, or NOM, use the appropriate value specified in the recommended operating conditions table.
‡ Applies only to pins with an internal pullup (IPU) or pulldown (IPD) resistor.
§ PCI input leakage currents include Hi-Z output leakage for all bidirectional buffers with 3-state outputs.
¶ These rated numbers are from the PCI specification version 2.3. The DC specification and AC specification are defined in Tables 4-3 and 4-4, respectively.
# Measured with average activity (50% high/50% low power). The actual current draw is highly application-dependent. For more details on core and I/O activity, refer to the *TMS320TCI100 Power Consumption Application Report* (literature number SPRAA09).

recommended clock and control signal transition behavior

All clocks and control signals ***must*** transition between V_{IH} and V_{IL} (or between V_{IL} and V_{IH}) in a monotonic manner.

PARAMETER MEASUREMENT INFORMATION

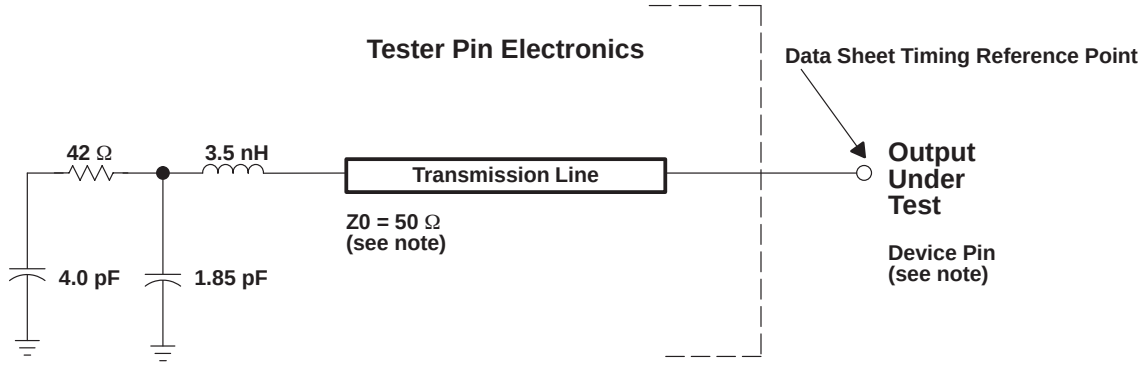

NOTE: The data sheet provides timing at the device pin. For output timing analysis, the tester pin electronics and its transmission line effects must be taken into account. A transmission line with a delay of 2 ns or longer can be used to produce the desired transmission line effect. The transmission line is intended as a load only. It is not necessary to add or subtract the transmission line delay (2 ns or longer) from the data sheet timings.

Input requirements in this data sheet are tested with an input slew rate of < 4 Volts per nanosecond (4 V/ns) at the device pin.

Figure 12. Test Load Circuit for AC Timing Measurements

The tester load circuit is for characterization and measurement of AC timing signals. This load does not indicate the maximum load the device is capable of driving.

signal transition levels

All input and output timing parameters are referenced to 1.5 V for both “0” and “1” logic levels.

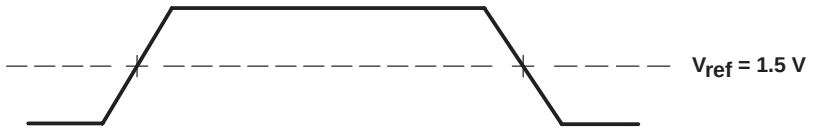

Figure 13. Input and Output Voltage Reference Levels for AC Timing Measurements

All rise and fall transition timing parameters are referenced to V_{IL} MAX and V_{IH} MIN for input clocks, V_{OL} MAX and V_{OH} MIN for output clocks, V_{ILP} MAX and V_{IHP} MIN for PCI input clocks, and V_{OLP} MAX and V_{OHP} MIN for PCI output clocks.

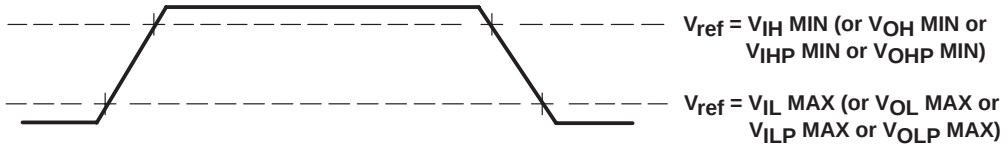

Figure 14. Rise and Fall Transition Time Voltage Reference Levels

signal transition rates

All timings are tested with an input edge rate of 4 Volts per nanosecond (4 V/ns).

PARAMETER MEASUREMENT INFORMATION (CONTINUED)

timing parameters and board routing analysis

The timing parameter values specified in this data sheet do *not* include delays by board routings. As a good board design practice, such delays must *always* be taken into account. Timing values may be adjusted by increasing/decreasing such delays. TI recommends utilizing the available I/O buffer information specification (IBIS) models to analyze the timing characteristics correctly. To properly use IBIS models to attain accurate timing analysis for a given system, see the *Using IBIS Models for Timing Analysis* application report (literature number SPRA839). If needed, external logic hardware such as buffers may be used to compensate any timing differences.

For inputs, timing is most impacted by the round-trip propagation delay from the DSP to the external device and from the external device to the DSP. This round-trip delay tends to negatively impact the input setup time margin, but also tends to improve the input hold time margins (see Table 32 and Figure 15).

Figure 15 represents a general transfer between the DSP and an external device. The figure also represents board route delays and how they are perceived by the DSP and the external device.

Table 32. Board-Level Parameters Example (see Figure 15)

NO.	DESCRIPTION
1	Clock route delay
2	Minimum DSP hold time
3	Minimum DSP setup time
4	External device hold time requirement
5	External device setup time requirement
6	Control signal route delay
7	External device hold time
8	External device access time
9	DSP hold time requirement
10	DSP setup time requirement
11	Data route delay

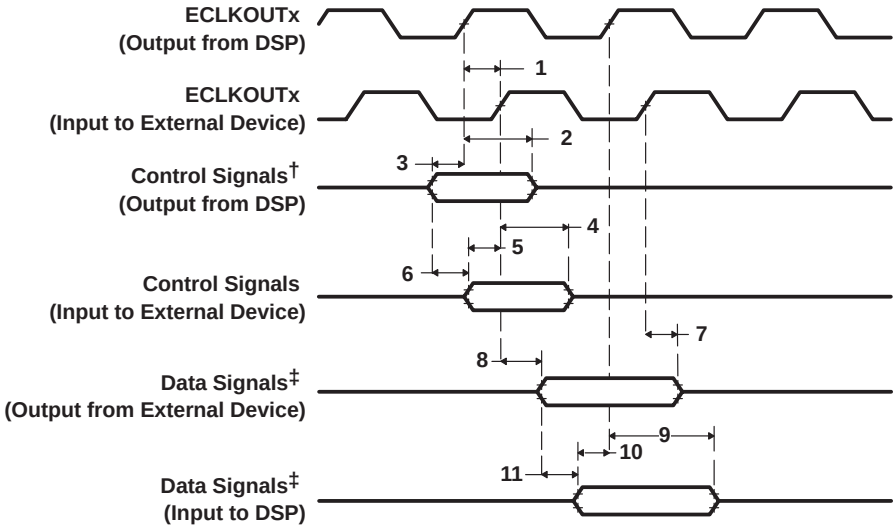

† Control signals include data for Writes.
‡ Data signals are generated during Reads from an external device.

Figure 15. Board-Level Input/Output Timings

INPUT AND OUTPUT CLOCKS

timing requirements for CLKIN for -600 devices†‡§ (see Figure 16)

NO.			−600						UNIT
			PLL MODE x12		PLL MODE x6		x1 (BYPASS)		
			MIN	MAX	MIN	MAX	MIN	MAX	
1	$t_{c(CLKIN)}$	Cycle time, CLKIN	20	23.8	13.3	23.8	0	10	ns
2	$t_{w(CLKINH)}$	Pulse duration, CLKIN high	0.4C		0.4C		0.45C		ns
3	$t_{w(CLKINL)}$	Pulse duration, CLKIN low	0.4C		0.4C		0.45C		ns
4	$t_{t(CLKIN)}$	Transition time, CLKIN		5		5		1	ns
5	$t_{J(CLKIN)}$	Period jitter, CLKIN		0.02C		0.02C		0.02C	ns

† The reference points for the rise and fall transitions are measured at V_{IL} MAX and V_{IH} MIN.
‡ For more details on the PLL multiplier factors (x6, x12), see the *Clock PLL* section of this data sheet.
§ C = CLKIN cycle time in ns. For example, when CLKIN frequency is 50 MHz, use C = 20 ns.

timing requirements for CLKIN for -720 devices†‡§ (see Figure 16)

NO.			−720						UNIT
			PLL MODE x12		PLL MODE x6		x1 (BYPASS)		
			MIN	MAX	MIN	MAX	MIN	MAX	
1	$t_{c(CLKIN)}$	Cycle time, CLKIN	16.6	23.8	13.3	23.8	0	10	ns
2	$t_{w(CLKINH)}$	Pulse duration, CLKIN high	0.4C		0.4C		0.45C		ns
3	$t_{w(CLKINL)}$	Pulse duration, CLKIN low	0.4C		0.4C		0.45C		ns
4	$t_{t(CLKIN)}$	Transition time, CLKIN		5		5		1	ns
5	$t_{J(CLKIN)}$	Period jitter, CLKIN		0.02C		0.02C		0.02C	ns

† The reference points for the rise and fall transitions are measured at V_{IL} MAX and V_{IH} MIN.
‡ For more details on the PLL multiplier factors (x6, x12), see the *Clock PLL* section of this data sheet.
§ C = CLKIN cycle time in ns. For example, when CLKIN frequency is 50 MHz, use C = 20 ns.

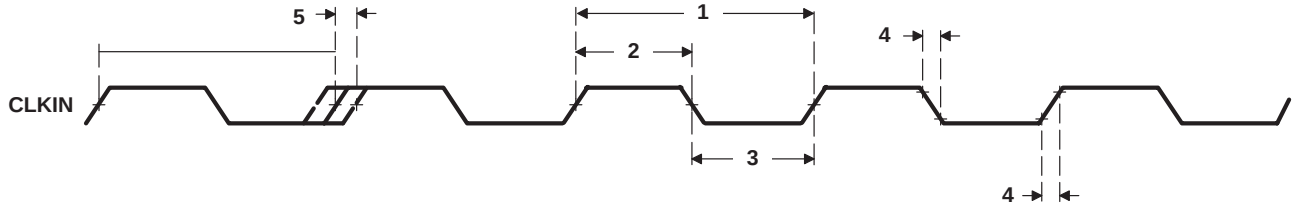

Figure 16. CLKIN Timing

INPUT AND OUTPUT CLOCKS (CONTINUED)

switching characteristics over recommended operating conditions for CLKOUT4†‡§ (see Figure 17)

NO.	PARAMETER		−600 −720 CLKMODE = x1, x6, x12 MIN	MAX	UNIT
1	$t_{J(CKO4)}$	Period jitter, CLKOUT4	0	±175	ps
2	$t_{w(CKO4H)}$	Pulse duration, CLKOUT4 high	2P − 0.7	2P + 0.7	ns
3	$t_{w(CKO4L)}$	Pulse duration, CLKOUT4 low	2P − 0.7	2P + 0.7	ns
4	$t_{t(CKO4)}$	Transition time, CLKOUT4		1	ns

† The reference points for the rise and fall transitions are measured at V_{OL} MAX and V_{OH} MIN.
‡ PH is the high period of CLKIN in ns and PL is the low period of CLKIN in ns.
§ P = 1/CPU clock frequency in nanoseconds (ns)

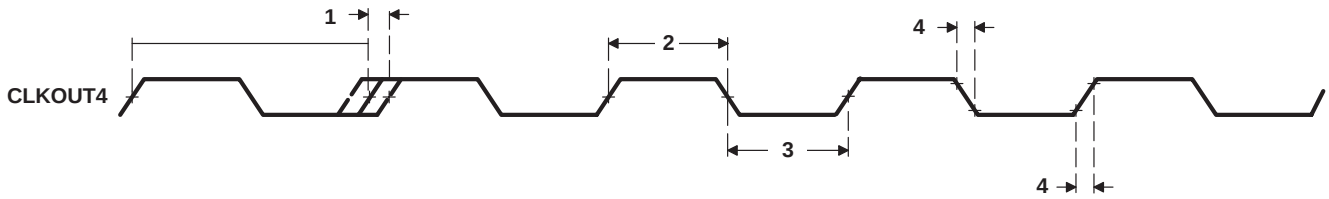

Figure 17. CLKOUT4 Timing

switching characteristics over recommended operating conditions for CLKOUT6†‡§ (see Figure 18)

NO.	PARAMETER		−600 −720 CLKMODE = x1, x6, x12 MIN	MAX	UNIT
1	$t_{J(CKO6)}$	Period jitter, CLKOUT6	0	±175	ps
2	$t_{w(CKO6H)}$	Pulse duration, CLKOUT6 high	3P − 0.7	3P + 0.7	ns
3	$t_{w(CKO6L)}$	Pulse duration, CLKOUT6 low	3P − 0.7	3P + 0.7	ns
4	$t_{t(CKO6)}$	Transition time, CLKOUT6		1	ns

† The reference points for the rise and fall transitions are measured at V_{OL} MAX and V_{OH} MIN.
‡ PH is the high period of CLKIN in ns and PL is the low period of CLKIN in ns.
§ P = 1/CPU clock frequency in nanoseconds (ns)

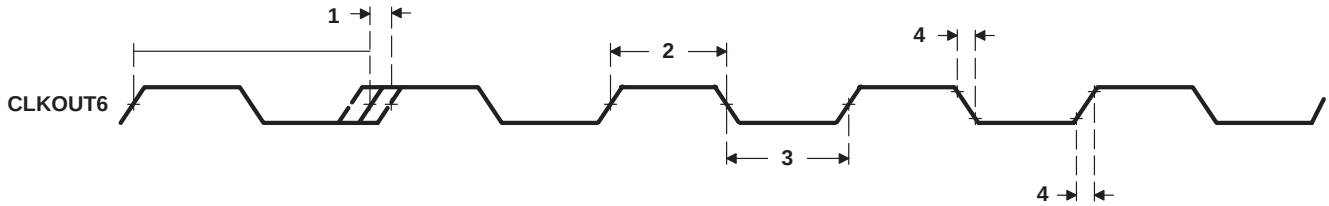

Figure 18. CLKOUT6 Timing

INPUT AND OUTPUT CLOCKS (CONTINUED)

timing requirements for ECLKIN for EMIFA and EMIFB†‡§¶ (see Figure 19)

NO.				−600 −720 MIN	−600 −720 MAX	UNIT
1	$t_{c(EKI)}$	Cycle time, ECLKIN	CV_{DD} = 1.2 V	6#	16P	ns
			CV_{DD} = 1.1 V	7.5#	16P	ns
2	$t_{w(EKIH)}$	Pulse duration, ECLKIN high		2.7		ns
3	$t_{w(EKIL)}$	Pulse duration, ECLKIN low		2.7		ns
4	$t_{t(EKI)}$	Transition time, ECLKIN			2	ns
5	$t_{J(EKI)}$	Period jitter, ECLKIN			0.02E	ns

† P = 1/CPU clock frequency in ns. For example, when running parts at 720 MHz, use P = 1.39 ns.
‡ The reference points for the rise and fall transitions are measured at V_{IL} MAX and V_{IH} MIN.
§ These C64x™ devices have two EMIFs (64-bit EMIFA and 16-bit EMIFB). All EMIFA signals are prefixed by an “A” and all EMIFB signals are prefixed by a “B”. Throughout the rest of this document, in generic EMIF areas of discussion, the prefix “A” or “B” may be omitted.
¶ E = the EMIF input clock (ECLKIN, CPU/4 clock, or CPU/6 clock) period in ns for EMIFA or EMIFB.
# Minimum ECLKIN cycle times *must* be met, even when ECLKIN is generated by an internal clock source. Minimum ECLKIN times are based on internal logic speed; the maximum useable speed of the EMIF may be lower due to AC timing requirements. On the devices, 133-MHz operation is achievable if the requirements of the EMIF Device Speed section are met.

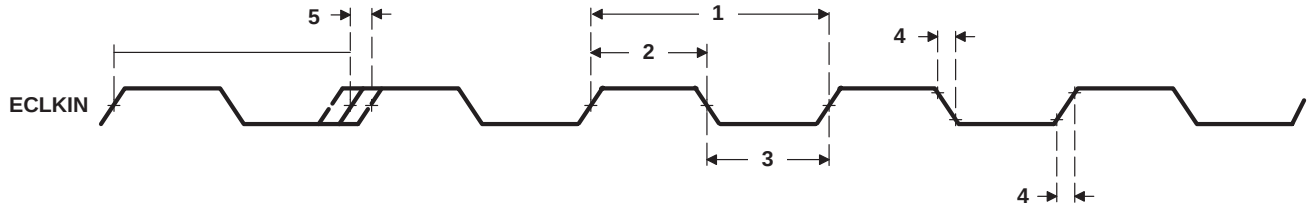

Figure 19. ECLKIN Timing for EMIFA and EMIFB

switching characteristics over recommended operating conditions for ECLKOUT1 for EMIFA and EMIFB modules§¶‖☆ (see Figure 20)

NO.	PARAMETER		−600 −720 MIN	−600 −720 MAX	UNIT
1	$t_{J(EKO1)}$	Period jitter, ECLKOUT1	0	±175□	ps
2	$t_{w(EKO1H)}$	Pulse duration, ECLKOUT1 high	EH − 0.7	EH + 0.7	ns
3	$t_{w(EKO1L)}$	Pulse duration, ECLKOUT1 low	EL − 0.7	EL + 0.7	ns
4	$t_{t(EKO1)}$	Transition time, ECLKOUT1		1	ns
5	$t_{d(EKIH-EKO1H)}$	Delay time, ECLKIN high to ECLKOUT1 high	0.8	8	ns
6	$t_{d(EKIL-EKO1L)}$	Delay time, ECLKIN low to ECLKOUT1 low	0.8	8	ns

§ These C64x™ devices have two EMIFs (64-bit EMIFA and 16-bit EMIFB). All EMIFA signals are prefixed by an “A” and all EMIFB signals are prefixed by a “B”. Throughout the rest of this document, in generic EMIF areas of discussion, the prefix “A” or “B” may be omitted.
¶ E = the EMIF input clock (ECLKIN, CPU/4 clock, or CPU/6 clock) period in ns for EMIFA or EMIFB.
‖ The reference points for the rise and fall transitions are measured at V_{OL} MAX and V_{OH} MIN.
☆EH is the high period of E (EMIF input clock period) in ns and EL is the low period of E (EMIF input clock period) in ns for EMIFA or EMIFB.
□This cycle-to-cycle jitter specification was measured with CPU/4 or CPU/6 as the source of the EMIF input clock.

INPUT AND OUTPUT CLOCKS (CONTINUED)

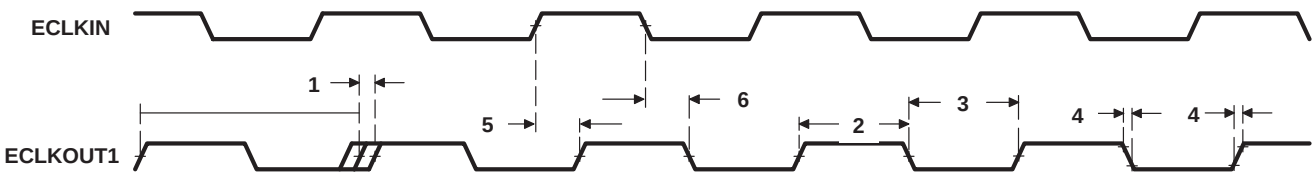

Figure 20. ECLKOUT1 Timing for EMIFA and EMIFB Modules

switching characteristics over recommended operating conditions for ECLKOUT2 for the EMIFA and EMIFB modules†‡§ (see Figure 21)

NO.	PARAMETER		−600 −720		UNIT
			MIN	MAX	
1	$t_{J(EKO2)}$	Period jitter, ECLKOUT2	0	±175¶	ps
2	$t_{w(EKO2H)}$	Pulse duration, ECLKOUT2 high	0.5NE − 0.7	0.5NE + 0.7	ns
3	$t_{w(EKO2L)}$	Pulse duration, ECLKOUT2 low	0.5NE − 0.7	0.5NE + 0.7	ns
4	$t_{t(EKO2)}$	Transition time, ECLKOUT2		1	ns
5	$t_{d(EKIH-EKO2H)}$	Delay time, ECLKIN high to ECLKOUT2 high	3	8	ns
6	$t_{d(EKIH-EKO2L)}$	Delay time, ECLKIN high to ECLKOUT2 low	3	8	ns

† The reference points for the rise and fall transitions are measured at V_{OL} MAX and V_{OH} MIN.
‡ These C64x™ devices have two EMIFs (64-bit EMIFA and 16-bit EMIFB). All EMIFA signals are prefixed by an “A” and all EMIFB signals are prefixed by a “B”. Throughout the rest of this document, in generic EMIF areas of discussion, the prefix “A” or “B” may be omitted.
§ E = the EMIF input clock (ECLKIN, CPU/4 clock, or CPU/6 clock) period in ns for EMIFA or EMIFB.
N = the EMIF input clock divider; N = 1, 2, or 4.
¶ This cycle-to-cycle jitter specification was measured with CPU/4 or CPU/6 as the source of the EMIF input clock.

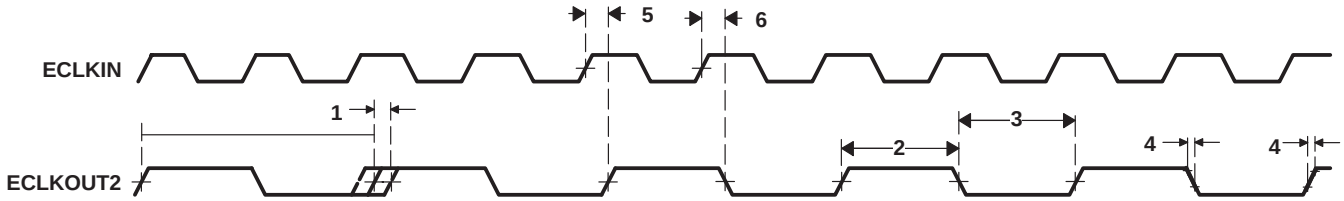

Figure 21. ECLKOUT2 Timing for the EMIFA and EMIFB Modules

ASYNCHRONOUS MEMORY TIMING

timing requirements for asynchronous memory cycles for EMIFA module†‡§ (see Figure 22 and Figure 23)

NO.			−600 −720		UNIT
			MIN	MAX	
3	$t_{su(EDV-AREH)}$	Setup time, EDx valid before $\overline{ARE}$ high	6.5		ns
4	$t_{h(AREH-EDV)}$	Hold time, EDx valid after $\overline{ARE}$ high	1		ns
6	$t_{su(ARDY-EKO1H)}$	Setup time, ARDY valid before ECLKOUTx high	3		ns
7	$t_{h(EKO1H-ARDY)}$	Hold time, ARDY valid after ECLKOUTx high	1		ns

† To ensure data setup time, simply program the strobe width wide enough. ARDY is internally synchronized. The ARDY signal is *only* recognized two cycles before the end of the programmed strobe time and while ARDY is low, the strobe time is extended cycle-by-cycle. When ARDY is recognized low, the end of the strobe time is two cycles after ARDY is recognized high. To use ARDY as an asynchronous input, the pulse width of the ARDY signal should be wide enough (e.g., pulse width = 2E) to ensure setup and hold time is met.

‡ RS = Read setup, RST = Read strobe, RH = Read hold, WS = Write setup, WST = Write strobe, WH = Write hold. These parameters are programmed via the EMIF CE space control registers.

§ These C64x™ devices have two EMIFs (EMIFA and EMIFB). All EMIFA signals are prefixed by an “A” and all EMIFB signals are prefixed by a “B”. Throughout the rest of this document, in generic EMIF areas of discussion, the prefix “A” or “B” may be omitted [e.g., the asynchronous memory access signals are shown as generic ($\overline{AOE}$, $\overline{ARE}$, and $\overline{AWE}$) instead of $\overline{AAOE}$, $\overline{AARE}$, and $\overline{AAWE}$ (for EMIFA) and $\overline{BAOE}$, $\overline{BARE}$, and $\overline{BAWE}$ (for EMIFB)].

switching characteristics over recommended operating conditions for asynchronous memory cycles for EMIFA module‡§¶# (see Figure 22 and Figure 23)

NO.	PARAMETER		−600 −720		UNIT
			MIN	MAX	
1	$t_{osu(SELV-AREL)}$	Output setup time, select signals valid to $\overline{ARE}$ low	RS * E − 1.5		ns
2	$t_{oh(AREH-SELIV)}$	Output hold time, $\overline{ARE}$ high to select signals invalid	RH * E − 1.9		ns
5	$t_{d(EKO1H-AREV)}$	Delay time, ECLKOUTx high to $\overline{ARE}$ valid	1	7	ns
8	$t_{osu(SELV-AWEL)}$	Output setup time, select signals valid to $\overline{AWE}$ low	WS * E − 1.7		ns
9	$t_{oh(AWEH-SELIV)}$	Output hold time, $\overline{AWE}$ high to select signals invalid	WH * E − 1.8		ns
10	$t_{d(EKO1H-AWEV)}$	Delay time, ECLKOUTx high to $\overline{AWE}$ valid	1.3	7.1	ns

‡ RS = Read setup, RST = Read strobe, RH = Read hold, WS = Write setup, WST = Write strobe, WH = Write hold. These parameters are programmed via the EMIF CE space control registers.

§ These C64x™ devices have two EMIFs (EMIFA and EMIFB). All EMIFA signals are prefixed by an “A” and all EMIFB signals are prefixed by a “B”. Throughout the rest of this document, in generic EMIF areas of discussion, the prefix “A” or “B” may be omitted [e.g., the asynchronous memory access signals are shown as generic ($\overline{AOE}$, $\overline{ARE}$, and $\overline{AWE}$) instead of $\overline{AAOE}$, $\overline{AARE}$, and $\overline{AAWE}$ (for EMIFA) and $\overline{BAOE}$, $\overline{BARE}$, and $\overline{BAWE}$ (for EMIFB)].

¶ E = ECLKOUT1 period in ns for EMIFA or EMIFB

Select signals for EMIFA include: $\overline{ACEx}$, $\overline{ABE}$[7:0], AEA[22:3], $\overline{AAOE}$; and for EMIFA writes, include AED[63:0].
Select signals EMIFB include: $\overline{BCEx}$, $\overline{BBE}$[1:0], BEA[20:1], $\overline{BAOE}$; and for EMIFB writes, include BED[15:0].

ASYNCHRONOUS MEMORY TIMING (CONTINUED)

timing requirements for asynchronous memory cycles for EMIFB module†‡§ (see Figure 22 and Figure 23)

NO.			−600 −720		UNIT
			MIN	MAX	
3	$t_{su(EDV-AREH)}$	Setup time, EDx valid before $\overline{ARE}$ high	6.2		ns
4	$t_{h(AREH-EDV)}$	Hold time, EDx valid after $\overline{ARE}$ high	1		ns
6	$t_{su(ARDY-EKO1H)}$	Setup time, ARDY valid before ECLKOUTx high	3		ns
7	$t_{h(EKO1H-ARDY)}$	Hold time, ARDY valid after ECLKOUTx high	1.2		ns

† To ensure data setup time, simply program the strobe width wide enough. ARDY is internally synchronized. The ARDY signal is *only* recognized two cycles before the end of the programmed strobe time and while ARDY is low, the strobe time is extended cycle-by-cycle. When ARDY is recognized low, the end of the strobe time is two cycles after ARDY is recognized high. To use ARDY as an asynchronous input, the pulse width of the ARDY signal should be wide enough (e.g., pulse width = 2E) to ensure setup and hold time is met.

‡ RS = Read setup, RST = Read strobe, RH = Read hold, WS = Write setup, WST = Write strobe, WH = Write hold. These parameters are programmed via the EMIF CE space control registers.

§ These C64x™ devices have two EMIFs (EMIFA and EMIFB). All EMIFA signals are prefixed by an “A” and all EMIFB signals are prefixed by a “B”. Throughout the rest of this document, in generic EMIF areas of discussion, the prefix “A” or “B” may be omitted [e.g., the asynchronous memory access signals are shown as generic ($\overline{AOE}$, $\overline{ARE}$, and $\overline{AWE}$) instead of $\overline{AAOE}$, $\overline{AARE}$, and $\overline{AAWE}$ (for EMIFA) and $\overline{BAOE}$, $\overline{BARE}$, and $\overline{BAWE}$ (for EMIFB)].

switching characteristics over recommended operating conditions for asynchronous memory cycles for EMIFB module‡§¶# (see Figure 22 and Figure 23)

NO.	PARAMETER		−600 −720		UNIT
			MIN	MAX	
1	$t_{osu(SELV-AREL)}$	Output setup time, select signals valid to $\overline{ARE}$ low	RS * E − 1.6		ns
2	$t_{oh(AREH-SELIV)}$	Output hold time, $\overline{ARE}$ high to select signals invalid	RH * E − 1.7		ns
5	$t_{d(EKO1H-AREV)}$	Delay time, ECLKOUTx high to $\overline{ARE}$ valid	0.8	6.6	ns
8	$t_{osu(SELV-AWEL)}$	Output setup time, select signals valid to $\overline{AWE}$ low	WS * E − 1.9		ns
9	$t_{oh(AWEH-SELIV)}$	Output hold time, $\overline{AWE}$ high to select signals invalid	WH * E − 1.7		ns
10	$t_{d(EKO1H-AWEV)}$	Delay time, ECLKOUTx high to $\overline{AWE}$ vaild	0.9	6.7	ns

‡ RS = Read setup, RST = Read strobe, RH = Read hold, WS = Write setup, WST = Write strobe, WH = Write hold. These parameters are programmed via the EMIF CE space control registers.

§ These C64x™ devices have two EMIFs (EMIFA and EMIFB). All EMIFA signals are prefixed by an “A” and all EMIFB signals are prefixed by a “B”. Throughout the rest of this document, in generic EMIF areas of discussion, the prefix “A” or “B” may be omitted [e.g., the asynchronous memory access signals are shown as generic ($\overline{AOE}$, $\overline{ARE}$, and $\overline{AWE}$) instead of $\overline{AAOE}$, $\overline{AARE}$, and $\overline{AAWE}$ (for EMIFA) and $\overline{BAOE}$, $\overline{BARE}$, and $\overline{BAWE}$ (for EMIFB)].

¶ E = ECLKOUT1 period in ns for EMIFA or EMIFB

Select signals for EMIFA include: $\overline{ACEx}$, $\overline{ABE}$[7:0], AEA[22:3], $\overline{AAOE}$; and for EMIFA writes, include AED[63:0].
Select signals EMIFB include: $\overline{BCEx}$, $\overline{BBE}$[1:0], BEA[20:1], $\overline{BAOE}$; and for EMIFB writes, include BED[15:0].

ASYNCHRONOUS MEMORY TIMING (CONTINUED)

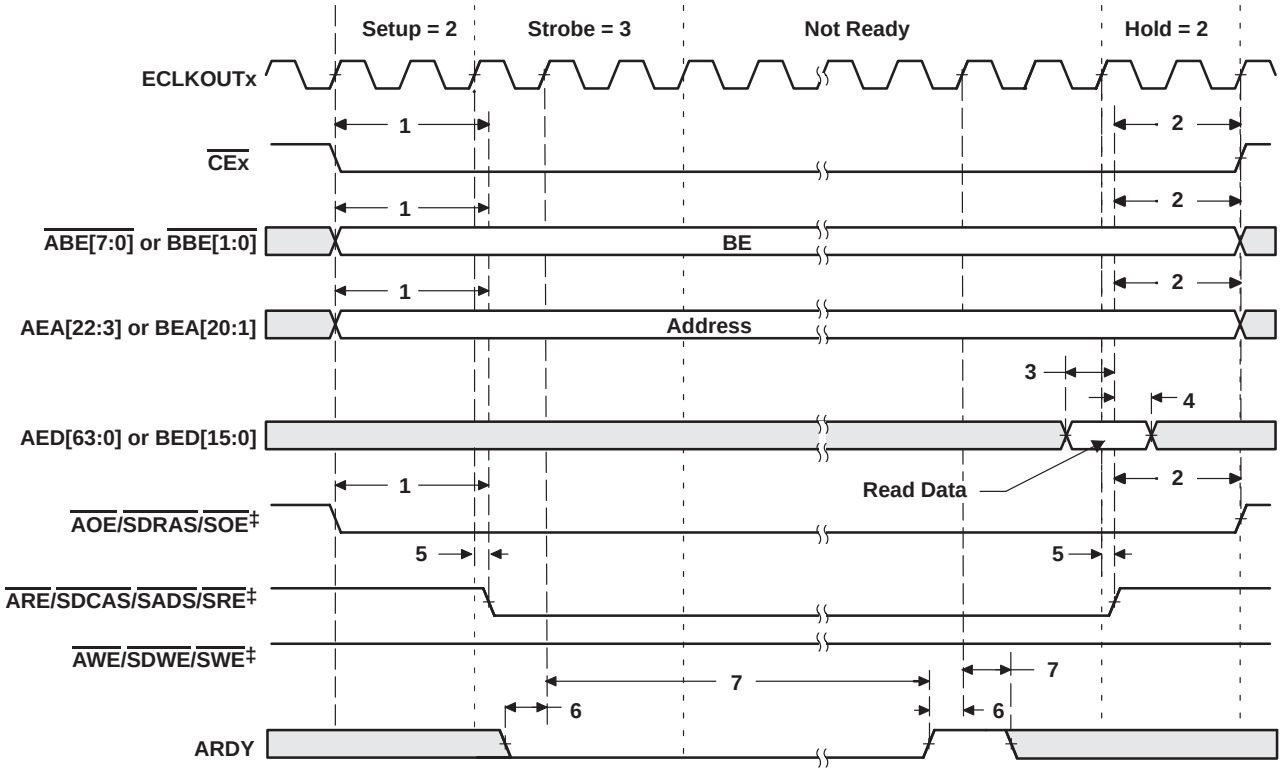

† These C64x™ devices have two EMIFs (EMIFA and EMIFB). All EMIFA signals are prefixed by an “A” and all EMIFB signals are prefixed by a “B”. Throughout the rest of this document, in generic EMIF areas of discussion, the prefix “A” or “B” may be omitted [e.g., the asynchronous memory access signals are shown as generic ($\overline{\text{AOE}}$, $\overline{\text{ARE}}$, and $\overline{\text{AWE}}$) instead of $\overline{\text{AAOE}}$, $\overline{\text{AARE}}$, and $\overline{\text{AAWE}}$ (for EMIFA) and $\overline{\text{BAOE}}$, $\overline{\text{BARE}}$, and $\overline{\text{BAWE}}$ (for EMIFB)].

‡ $\overline{\text{AOE}}$/$\overline{\text{SDRAS}}$/$\overline{\text{SOE}}$, $\overline{\text{ARE}}$/$\overline{\text{SDCAS}}$/$\overline{\text{SADS}}$/$\overline{\text{SRE}}$, and $\overline{\text{AWE}}$/$\overline{\text{SDWE}}$/$\overline{\text{SWE}}$ operate as $\overline{\text{AOE}}$ (identified under select signals), $\overline{\text{ARE}}$, and $\overline{\text{AWE}}$, respectively, during asynchronous memory accesses.

Figure 22. Asynchronous Memory Read Timing for EMIFA and EMIFB†

ASYNCHRONOUS MEMORY TIMING (CONTINUED)

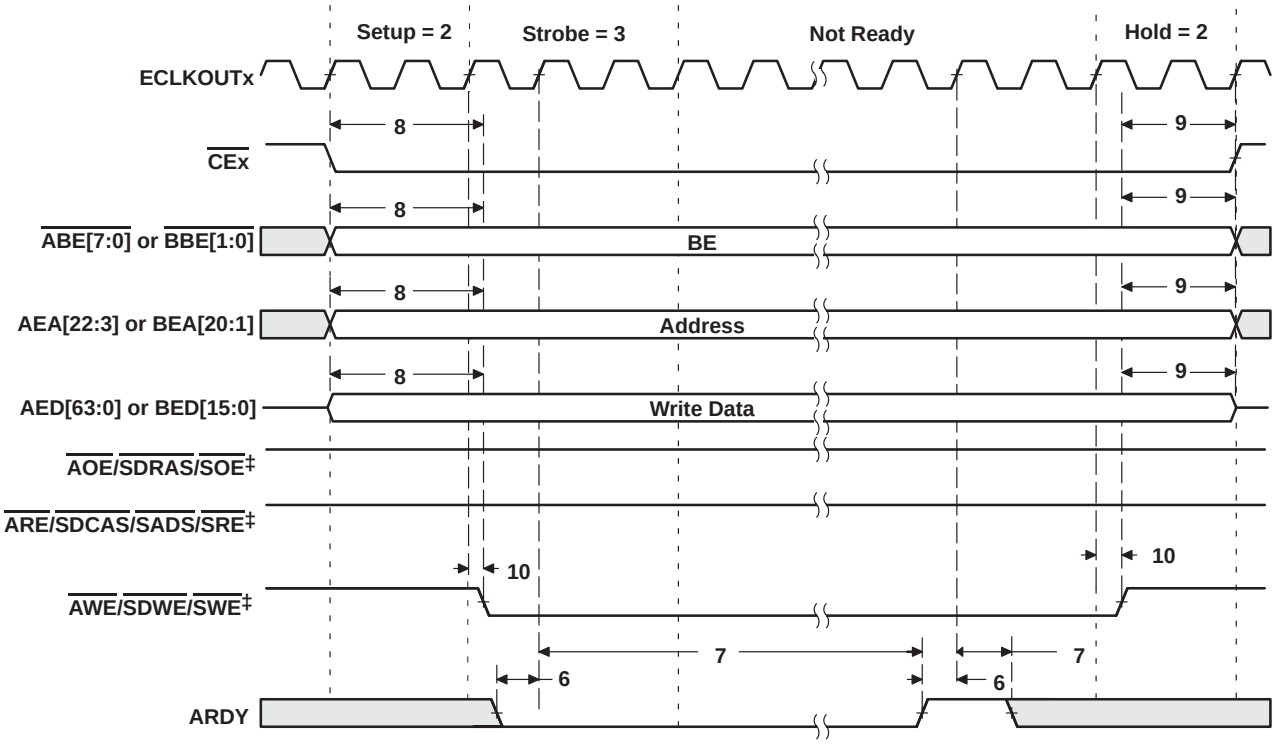

† These C64x™ devices have two EMIFs (EMIFA and EMIFB). All EMIFA signals are prefixed by an “A” and all EMIFB signals are prefixed by a “B”. Throughout the rest of this document, in generic EMIF areas of discussion, the prefix “A” or “B” may be omitted [e.g., the asynchronous memory access signals are shown as generic (AOE, ARE, and AWE) instead of AAOE, AARE, and AAWE (for EMIFA) and BAOE, BARE, and BAWE (for EMIFB)].

‡ AOE/SDRAS/SOE, ARE/SDCAS/SADS/SRE, and AWE/SDWE/SWE operate as AOE (identified under select signals), ARE, and AWE, respectively, during asynchronous memory accesses.

Figure 23. Asynchronous Memory Write Timing for EMIFA and EMIFB†

PROGRAMMABLE SYNCHRONOUS INTERFACE TIMING

timing requirements for programmable synchronous interface cycles for EMIFA module† (see Figure 24)

NO.			−600 −720		UNIT
			MIN	MAX	
6	$t_{su(EDV-EKOxH)}$	Setup time, read EDx valid before ECLKOUTx high	2		ns
7	$t_{h(EKOxH-EDV)}$	Hold time, read EDx valid after ECLKOUTx high	1.5		ns

† These C64x™ devices have two EMIFs (EMIFA and EMIFB). All EMIFA signals are prefixed by an “A” and all EMIFB signals are prefixed by a “B”. Throughout the rest of this document, in generic EMIF areas of discussion, the prefix “A” or “B” may be omitted [e.g., the programmable synchronous interface access signals are shown as generic ($\overline{SADS}$/$\overline{SRE}$, $\overline{SOE}$, and $\overline{SWE}$) instead of $\overline{ASADS}$/$\overline{ASRE}$, $\overline{ASOE}$, and $\overline{ASWE}$ (for EMIFA) and $\overline{BSADS}$/$\overline{BSRE}$, $\overline{BSOE}$, and $\overline{BSWE}$ (for EMIFB)].

switching characteristics over recommended operating conditions for programmable synchronous interface cycles for EMIFA module†‡ (see Figure 24−Figure 26)

NO.	PARAMETER		−600 −720		UNIT
			MIN	MAX	
1	$t_{d(EKOxH-CEV)}$	Delay time, ECLKOUTx high to $\overline{CEx}$ valid	1.3	4.9	ns
2	$t_{d(EKOxH-BEV)}$	Delay time, ECLKOUTx high to $\overline{BEx}$ valid		4.9	ns
3	$t_{d(EKOxH-BEIV)}$	Delay time, ECLKOUTx high to $\overline{BEx}$ invalid	1.3		ns
4	$t_{d(EKOxH-EAV)}$	Delay time, ECLKOUTx high to EAx valid		4.9	ns
5	$t_{d(EKOxH-EAIV)}$	Delay time, ECLKOUTx high to EAx invalid	1.3		ns
8	$t_{d(EKOxH-ADSV)}$	Delay time, ECLKOUTx high to $\overline{SADS}$/$\overline{SRE}$ valid	1.3	4.9	ns
9	$t_{d(EKOxH-OEV)}$	Delay time, ECLKOUTx high to, $\overline{SOE}$ valid	1.3	4.9	ns
10	$t_{d(EKOxH-EDV)}$	Delay time, ECLKOUTx high to EDx valid		4.9	ns
11	$t_{d(EKOxH-EDIV)}$	Delay time, ECLKOUTx high to EDx invalid	1.3		ns
12	$t_{d(EKOxH-WEV)}$	Delay time, ECLKOUTx high to $\overline{SWE}$ valid	1.3	4.9	ns

† These C64x™ devices have two EMIFs (EMIFA and EMIFB). All EMIFA signals are prefixed by an “A” and all EMIFB signals are prefixed by a “B”. Throughout the rest of this document, in generic EMIF areas of discussion, the prefix “A” or “B” may be omitted [e.g., the programmable synchronous interface access signals are shown as generic ($\overline{SADS}$/$\overline{SRE}$, $\overline{SOE}$, and $\overline{SWE}$) instead of $\overline{ASADS}$/$\overline{ASRE}$, $\overline{ASOE}$, and $\overline{ASWE}$ (for EMIFA) and $\overline{BSADS}$/$\overline{BSRE}$, $\overline{BSOE}$, and $\overline{BSWE}$ (for EMIFB)].

‡ The following parameters are programmable via the EMIF CE Space Secondary Control register (CExSEC):

- Read latency (SYNCRL): 0-, 1-, 2-, or 3-cycle read latency
- Write latency (SYNCWL): 0-, 1-, 2-, or 3-cycle write latency
- $\overline{CEx}$ assertion length (CEEXT): For standard SBSRAM or ZBT SRAM interface, $\overline{CEx}$ goes inactive after the final command has been issued (CEEXT = 0). For synchronous FIFO interface with glue, $\overline{CEx}$ is active when $\overline{SOE}$ is active (CEEXT = 1).
- Function of $\overline{SADS}$/$\overline{SRE}$ (RENEN): For standard SBSRAM or ZBT SRAM interface, $\overline{SADS}$/$\overline{SRE}$ acts as $\overline{SADS}$ with deselect cycles (RENEN = 0). For FIFO interface, $\overline{SADS}$/$\overline{SRE}$ acts as $\overline{SRE}$ with NO deselect cycles (RENEN = 1).
- Synchronization clock (SNCCLK): Synchronized to ECLKOUT1 or ECLKOUT2

PROGRAMMABLE SYNCHRONOUS INTERFACE TIMING (CONTINUED)

timing requirements for programmable synchronous interface cycles for EMIFB module† (see Figure 24)

NO.			−600 −720		UNIT
			MIN	MAX	
6	$t_{su(EDV-EKOxH)}$	Setup time, read EDx valid before ECLKOUTx high	3.1		ns
7	$t_{h(EKOxH-EDV)}$	Hold time, read EDx valid after ECLKOUTx high	1.5		ns

† These C64x™ devices have two EMIFs (EMIFA and EMIFB). All EMIFA signals are prefixed by an “A” and all EMIFB signals are prefixed by a “B”. Throughout the rest of this document, in generic EMIF areas of discussion, the prefix “A” or “B” may be omitted [e.g., the programmable synchronous interface access signals are shown as generic (SADS/SRE, SOE, and SWE) instead of ASADS/ASRE, ASOE, and ASWE (for EMIFA) and BSADS/BSRE, BSOE, and BSWE (for EMIFB)].

switching characteristics over recommended operating conditions for programmable synchronous interface cycles for EMIFB module†‡ (see Figure 24−Figure 26)

NO.	PARAMETER		−600 −720		UNIT
			MIN	MAX	
1	$t_{d(EKOxH-CEV)}$	Delay time, ECLKOUTx high to CEx valid	1.3	6.4	ns
2	$t_{d(EKOxH-BEV)}$	Delay time, ECLKOUTx high to BEx valid		6.4	ns
3	$t_{d(EKOxH-BEIV)}$	Delay time, ECLKOUTx high to BEx invalid	1.3		ns
4	$t_{d(EKOxH-EAV)}$	Delay time, ECLKOUTx high to EAx valid		6.4	ns
5	$t_{d(EKOxH-EAIV)}$	Delay time, ECLKOUTx high to EAx invalid	1.3		ns
8	$t_{d(EKOxH-ADSV)}$	Delay time, ECLKOUTx high to SADS/SRE valid	1.3	6.4	ns
9	$t_{d(EKOxH-OEV)}$	Delay time, ECLKOUTx high to, SOE valid	1.3	6.4	ns
10	$t_{d(EKOxH-EDV)}$	Delay time, ECLKOUTx high to EDx valid		6.4	ns
11	$t_{d(EKOxH-EDIV)}$	Delay time, ECLKOUTx high to EDx invalid	1.3		ns
12	$t_{d(EKOxH-WEV)}$	Delay time, ECLKOUTx high to SWE valid	1.3	6.4	ns

† These C64x™ devices have two EMIFs (EMIFA and EMIFB). All EMIFA signals are prefixed by an “A” and all EMIFB signals are prefixed by a “B”. Throughout the rest of this document, in generic EMIF areas of discussion, the prefix “A” or “B” may be omitted [e.g., the programmable synchronous interface access signals are shown as generic (SADS/SRE, SOE, and SWE) instead of ASADS/ASRE, ASOE, and ASWE (for EMIFA) and BSADS/BSRE, BSOE, and BSWE (for EMIFB)].

‡ The following parameters are programmable via the EMIF CE Space Secondary Control register (CExSEC):

- Read latency (SYNCRL): 0-, 1-, 2-, or 3-cycle read latency
- Write latency (SYNCWL): 0-, 1-, 2-, or 3-cycle write latency
- CEx assertion length (CEEXT): For standard SBSRAM or ZBT SRAM interface, CEx goes inactive after the final command has been issued (CEEXT = 0). For synchronous FIFO interface with glue, CEx is active when SOE is active (CEEXT = 1).
- Function of SADS/SRE (RENEN): For standard SBSRAM or ZBT SRAM interface, SADS/SRE acts as SADS with deselect cycles (RENEN = 0). For FIFO interface, SADS/SRE acts as SRE with NO deselect cycles (RENEN = 1).
- Synchronization clock (SNCCLK): Synchronized to ECLKOUT1 or ECLKOUT2

PROGRAMMABLE SYNCHRONOUS INTERFACE TIMING (CONTINUED)

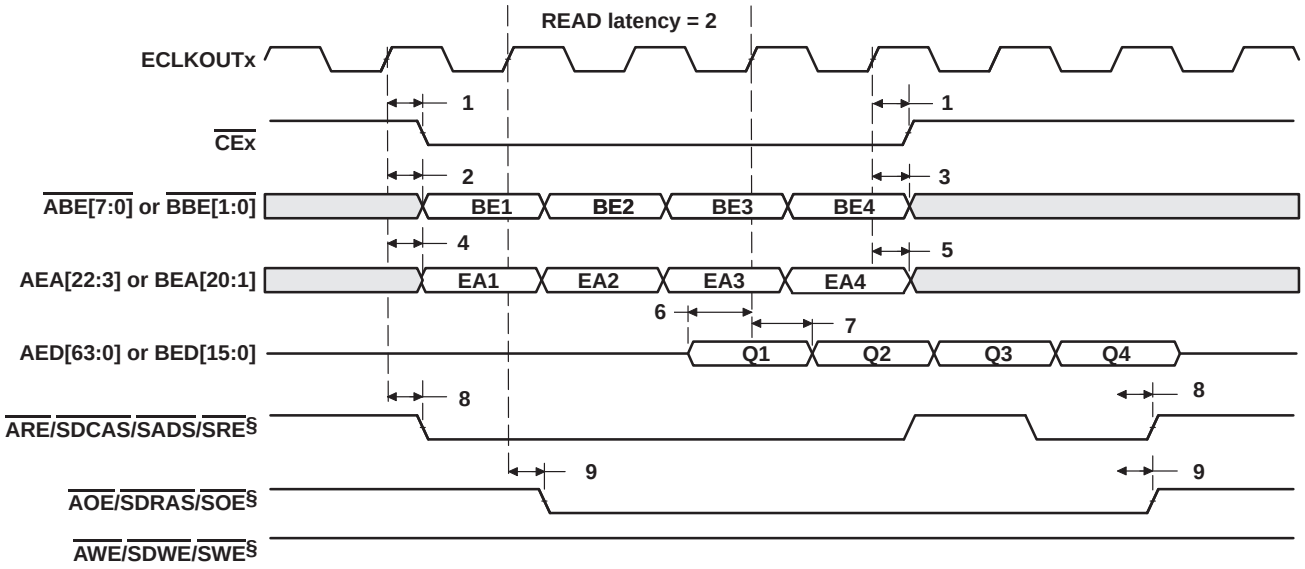

† These C64x™ devices have two EMIFs (EMIFA and EMIFB). All EMIFA signals are prefixed by an “A” and all EMIFB signals are prefixed by a “B”. Throughout the rest of this document, in generic EMIF areas of discussion, the prefix “A” or “B” may be omitted [e.g., the programmable synchronous interface access signals are shown as generic (SADS/SRE, SOE, and SWE) instead of ASADS/ASRE, ASOE, and ASWE (for EMIFA) and BSADS/BSRE, BSOE, and BSWE (for EMIFB)].

‡ The read latency and the length of CEx assertion are programmable via the SYNCRL and CEEXT fields, respectively, in the EMIFx CE Space Secondary Control register (CExSEC). In this figure, SYNCRL = 2 and CEEXT = 0.

§ The following parameters are programmable via the EMIF CE Space Secondary Control register (CExSEC):

- Read latency (SYNCRL): 0-, 1-, 2-, or 3-cycle read latency
- Write latency (SYNCWL): 0-, 1-, 2-, or 3-cycle write latency
- CEx assertion length (CEEXT): For standard SBSRAM or ZBT SRAM interface, CEx goes inactive after the final command has been issued (CEEXT = 0). For synchronous FIFO interface with glue, CEx is active when SOE is active (CEEXT = 1).
- Function of SADS/SRE (RENEN): For standard SBSRAM or ZBT SRAM interface, SADS/SRE acts as SADS with deselect cycles (RENEN = 0). For FIFO interface, SADS/SRE acts as SRE with NO deselect cycles (RENEN = 1).
- Synchronization clock (SNCCLK): Synchronized to ECLKOUT1 or ECLKOUT2

¶ ARE/SDCAS/SADS/SRE, AOE/SDRAS/SOE, and AWE/SDWE/SWE operate as SADS/SRE, SOE, and SWE, respectively, during programmable synchronous interface accesses.

Figure 24. Programmable Synchronous Interface Read Timing for EMIFA and EMIFB (With Read Latency = 2)†‡§

PROGRAMMABLE SYNCHRONOUS INTERFACE TIMING (CONTINUED)

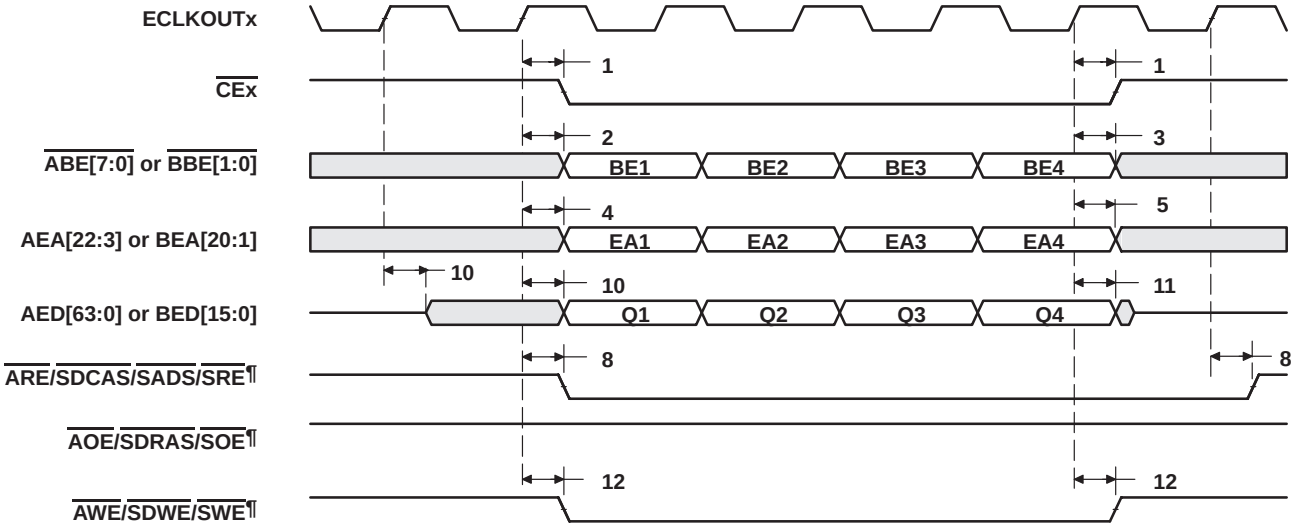

† These C64x™ devices have two EMIFs (EMIFA and EMIFB). All EMIFA signals are prefixed by an “A” and all EMIFB signals are prefixed by a “B”. Throughout the rest of this document, in generic EMIF areas of discussion, the prefix “A” or “B” may be omitted [e.g., the programmable synchronous interface access signals are shown as generic (SADS/SRE, SOE, and SWE) instead of ASADS/ASRE, ASOE, and ASWE (for EMIFA) and BSADS/BSRE, BSOE, and BSWE (for EMIFB)].

‡ The write latency and the length of CEx assertion are programmable via the SYNCWL and CEEXT fields, respectively, in the EMIFx CE Space Secondary Control register (CExSEC). In this figure, SYNCWL = 0 and CEEXT = 0.

§ The following parameters are programmable via the EMIF CE Space Secondary Control register (CExSEC):

- Read latency (SYNCRL): 0-, 1-, 2-, or 3-cycle read latency
- Write latency (SYNCWL): 0-, 1-, 2-, or 3-cycle write latency
- CEx assertion length (CEEXT): For standard SBSRAM or ZBT SRAM interface, CEx goes inactive after the final command has been issued (CEEXT = 0). For synchronous FIFO interface with glue, CEx is active when SOE is active (CEEXT = 1).
- Function of SADS/SRE (RENEN): For standard SBSRAM or ZBT SRAM interface, SADS/SRE acts as SADS with deselect cycles (RENEN = 0). For FIFO interface, SADS/SRE acts as SRE with NO deselect cycles (RENEN = 1).
- Synchronization clock (SNCCLK): Synchronized to ECLKOUT1 or ECLKOUT2

¶ ARE/SDCAS/SADS/SRE, AOE/SDRAS/SOE, and AWE/SDWE/SWE operate as SADS/SRE, SOE, and SWE, respectively, during programmable synchronous interface accesses.

Figure 25. Programmable Synchronous Interface Write Timing for EMIFA and EMIFB (With Write Latency = 0)†‡§

PROGRAMMABLE SYNCHRONOUS INTERFACE TIMING (CONTINUED)

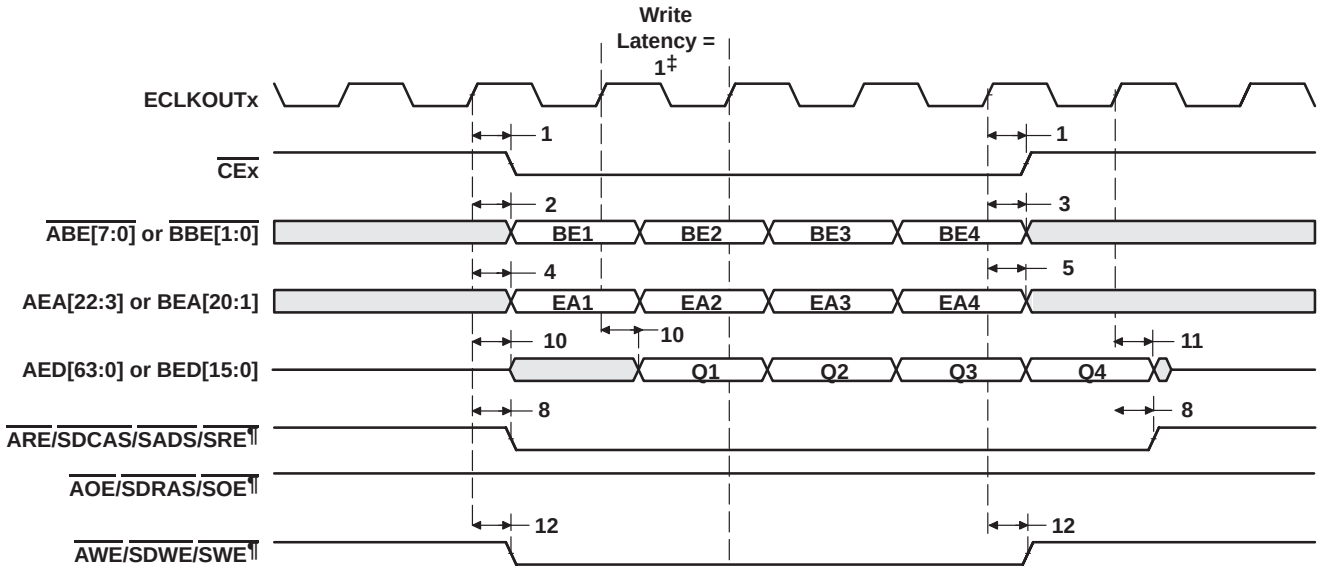

† These C64x™ devices have two EMIFs (EMIFA and EMIFB). All EMIFA signals are prefixed by an “A” and all EMIFB signals are prefixed by a “B”. Throughout the rest of this document, in generic EMIF areas of discussion, the prefix “A” or “B” may be omitted [e.g., the programmable synchronous interface access signals are shown as generic (SADS/SRE, SOE, and SWE) instead of ASADS/ASRE, ASOE, and ASWE (for EMIFA) and BSADS/BSRE, BSOE, and BSWE (for EMIFB)].

‡ The write latency and the length of CEx assertion are programmable via the SYNCWL and CEEXT fields, respectively, in the EMIFx CE Space Secondary Control register (CExSEC). In this figure, SYNCWL = 1 and CEEXT = 0.

§ The following parameters are programmable via the EMIF CE Space Secondary Control register (CExSEC):

- Read latency (SYNCRL): 0-, 1-, 2-, or 3-cycle read latency
- Write latency (SYNCWL): 0-, 1-, 2-, or 3-cycle write latency
- CEx assertion length (CEEXT): For standard SBSRAM or ZBT SRAM interface, CEx goes inactive after the final command has been issued (CEEXT = 0). For synchronous FIFO interface with glue, CEx is active when SOE is active (CEEXT = 1).
- Function of SADS/SRE (RENEN): For standard SBSRAM or ZBT SRAM interface, SADS/SRE acts as SADS with deselect cycles (RENEN = 0). For FIFO interface, SADS/SRE acts as SRE with NO deselect cycles (RENEN = 1).
- Synchronization clock (SNCCLK): Synchronized to ECLKOUT1 or ECLKOUT2

¶ ARE/SDCAS/SADS/SRE, AOE/SDRAS/SOE, and AWE/SDWE/SWE operate as SADS/SRE, SOE, and SWE, respectively, during programmable synchronous interface accesses.

Figure 26. Programmable Synchronous Interface Write Timing for EMIFA and EMIFB (With Write Latency = 1)†‡§

SYNCHRONOUS DRAM TIMING

timing requirements for synchronous DRAM cycles for EMIFA module† (see Figure 27)

NO.				−600 −720 MIN	−600 −720 MAX	UNIT
6	$t_{su(EDV-EKO1H)}$	Setup time, read EDx valid before ECLKOUTx high		0.6		ns
7	$t_{h(EKO1H-EDV)}$	Hold time, read EDx valid after ECLKOUTx high	CV_{DD} = 1.2 V	1.8		ns
			CV_{DD} = 1.1 V	2.0		ns

† These C64x™ devices have two EMIFs (EMIFA and EMIFB). All EMIFA signals are prefixed by an “A” and all EMIFB signals are prefixed by a “B”. Throughout the rest of this document, in generic EMIF areas of discussion, the prefix “A” or “B” may be omitted [e.g., the synchronous DRAM memory access signals are shown as generic ($\overline{SDCAS}$, $\overline{SDWE}$, and $\overline{SDRAS}$) instead of $\overline{ASDCAS}$, $\overline{ASDWE}$, and $\overline{ASDRAS}$ (for EMIFA) and $\overline{BSDCAS}$, $\overline{BSDWE}$, and $\overline{BSDRAS}$ (for EMIFB)].

switching characteristics over recommended operating conditions for synchronous DRAM cycles for EMIFA module† (see Figure 27−Figure 34)

NO.	PARAMETER		−600 −720 MIN	−600 −720 MAX	UNIT
1	$t_{d(EKO1H-CEV)}$	Delay time, ECLKOUTx high to $\overline{CEx}$ valid	1.3	4.9	ns
2	$t_{d(EKO1H-BEV)}$	Delay time, ECLKOUTx high to $\overline{BEx}$ valid		4.9	ns
3	$t_{d(EKO1H-BEIV)}$	Delay time, ECLKOUTx high to $\overline{BEx}$ invalid	1.3		ns
4	$t_{d(EKO1H-EAV)}$	Delay time, ECLKOUTx high to EAx valid		4.9	ns
5	$t_{d(EKO1H-EAIV)}$	Delay time, ECLKOUTx high to EAx invalid	1.3		ns
8	$t_{d(EKO1H-CASV)}$	Delay time, ECLKOUTx high to $\overline{SDCAS}$ valid	1.3	4.9	ns
9	$t_{d(EKO1H-EDV)}$	Delay time, ECLKOUTx high to EDx valid		4.9	ns
10	$t_{d(EKO1H-EDIV)}$	Delay time, ECLKOUTx high to EDx invalid	1.3		ns
11	$t_{d(EKO1H-WEV)}$	Delay time, ECLKOUTx high to $\overline{SDWE}$ valid	1.3	4.9	ns
12	$t_{d(EKO1H-RAS)}$	Delay time, ECLKOUTx high to $\overline{SDRAS}$ valid	1.3	4.9	ns
13	$t_{d(EKO1H-ACKEV)}$	Delay time, ECLKOUTx high to ASDCKE valid (EMIFA only)	1.3	4.9	ns
14	$t_{d(EKO1H-PDTV)}$	Delay time, ECLKOUTx high to $\overline{PDT}$ valid	1.3	4.9	ns

† These C64x™ devices have two EMIFs (EMIFA and EMIFB). All EMIFA signals are prefixed by an “A” and all EMIFB signals are prefixed by a “B”. Throughout the rest of this document, in generic EMIF areas of discussion, the prefix “A” or “B” may be omitted [e.g., the synchronous DRAM memory access signals are shown as generic ($\overline{SDCAS}$, $\overline{SDWE}$, and $\overline{SDRAS}$) instead of $\overline{ASDCAS}$, $\overline{ASDWE}$, and $\overline{ASDRAS}$ (for EMIFA) and $\overline{BSDCAS}$, $\overline{BSDWE}$, and $\overline{BSDRAS}$ (for EMIFB)].

SYNCHRONOUS DRAM TIMING (CONTINUED)

timing requirements for synchronous DRAM cycles for EMIFB module† (see Figure 27)

NO.			−600 −720		UNIT
			MIN	MAX	
6	$t_{su(EDV-EKO1H)}$	Setup time, read EDx valid before ECLKOUTx high	2.1		ns
7	$t_{h(EKO1H-EDV)}$	Hold time, read EDx valid after ECLKOUTx high	2.5		ns

† These C64x™ devices have two EMIFs (EMIFA and EMIFB). All EMIFA signals are prefixed by an “A” and all EMIFB signals are prefixed by a “B”. Throughout the rest of this document, in generic EMIF areas of discussion, the prefix “A” or “B” may be omitted [e.g., the synchronous DRAM memory access signals are shown as generic ($\overline{SDCAS}$, $\overline{SDWE}$, and $\overline{SDRAS}$) instead of $\overline{ASDCAS}$, $\overline{ASDWE}$, and $\overline{ASDRAS}$ (for EMIFA) and $\overline{BSDCAS}$, $\overline{BSDWE}$, and $\overline{BSDRAS}$ (for EMIFB)].

switching characteristics over recommended operating conditions for synchronous DRAM cycles for EMIFB module† (see Figure 27−Figure 34)

NO.	PARAMETER		−600 −720		UNIT
			MIN	MAX	
1	$t_{d(EKO1H-CEV)}$	Delay time, ECLKOUTx high to $\overline{CEx}$ valid	1.3	6.4	ns
2	$t_{d(EKO1H-BEV)}$	Delay time, ECLKOUTx high to $\overline{BEx}$ valid		6.4	ns
3	$t_{d(EKO1H-BEIV)}$	Delay time, ECLKOUTx high to $\overline{BEx}$ invalid	1.3		ns
4	$t_{d(EKO1H-EAV)}$	Delay time, ECLKOUTx high to EAx valid		6.4	ns
5	$t_{d(EKO1H-EAIV)}$	Delay time, ECLKOUTx high to EAx invalid	1.3		ns
8	$t_{d(EKO1H-CASV)}$	Delay time, ECLKOUTx high to $\overline{SDCAS}$ valid	1.3	6.4	ns
9	$t_{d(EKO1H-EDV)}$	Delay time, ECLKOUTx high to EDx valid		6.4	ns
10	$t_{d(EKO1H-EDIV)}$	Delay time, ECLKOUTx high to EDx invalid	1.3		ns
11	$t_{d(EKO1H-WEV)}$	Delay time, ECLKOUTx high to $\overline{SDWE}$ valid	1.3	6.4	ns
12	$t_{d(EKO1H-RAS)}$	Delay time, ECLKOUTx high to $\overline{SDRAS}$ valid	1.3	6.4	ns
13	$t_{d(EKO1H-ACKEV)}$	Delay time, ECLKOUTx high to ASDCKE valid (EMIFA only)	1.3	6.4	ns
14	$t_{d(EKO1H-PDTV)}$	Delay time, ECLKOUTx high to $\overline{PDT}$ valid	1.3	6.4	ns

† These C64x™ devices have two EMIFs (EMIFA and EMIFB). All EMIFA signals are prefixed by an “A” and all EMIFB signals are prefixed by a “B”. Throughout the rest of this document, in generic EMIF areas of discussion, the prefix “A” or “B” may be omitted [e.g., the synchronous DRAM memory access signals are shown as generic ($\overline{SDCAS}$, $\overline{SDWE}$, and $\overline{SDRAS}$) instead of $\overline{ASDCAS}$, $\overline{ASDWE}$, and $\overline{ASDRAS}$ (for EMIFA) and $\overline{BSDCAS}$, $\overline{BSDWE}$, and $\overline{BSDRAS}$ (for EMIFB)].

SYNCHRONOUS DRAM TIMING (CONTINUED)

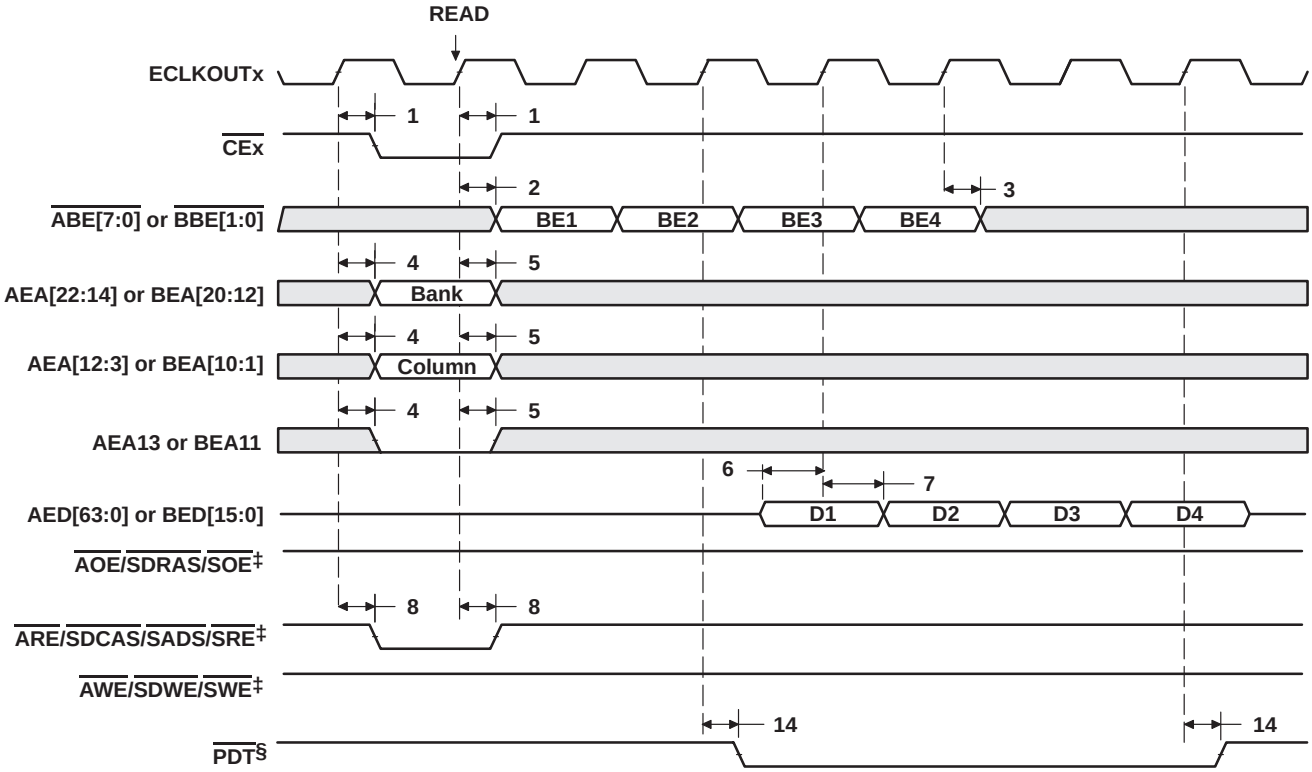

† These C64x™ devices have two EMIFs (EMIFA and EMIFB). All EMIFA signals are prefixed by an “A” and all EMIFB signals are prefixed by a “B”. Throughout the rest of this document, in generic EMIF areas of discussion, the prefix “A” or “B” may be omitted [e.g., the synchronous DRAM memory access signals are shown as generic (SDCAS, SDWE, and SDRAS) instead of ASDCAS, ASDWE, and ASDRAS (for EMIFA) and BSDCAS, BSDWE, and BSDRAS (for EMIFB)].

‡ ARE/SDCAS/SADS/SRE, AWE/SDWE/SWE, and AOE/SDRAS/SOE operate as SDCAS, SDWE, and SDRAS, respectively, during SDRAM accesses.

§ PDT signal is only asserted when the EDMA is in PDT mode (set the PDTS bit to 1 in the EDMA options parameter RAM). For PDT read, data is not latched into EMIF. The PDTRL field in the PDT control register (PDTCTL) configures the latency of the PDT signal with respect to the data phase of a read transaction. The latency of the PDT signal for a read can be programmed to 0, 1, 2, or 3 by setting PDTRL to 00, 01, 10, or 11, respectively. PDTRL equals 00 (zero latency) in Figure 27.

Figure 27. SDRAM Read Command (CAS Latency 3) for EMIFA and EMIFB†

SYNCHRONOUS DRAM TIMING (CONTINUED)

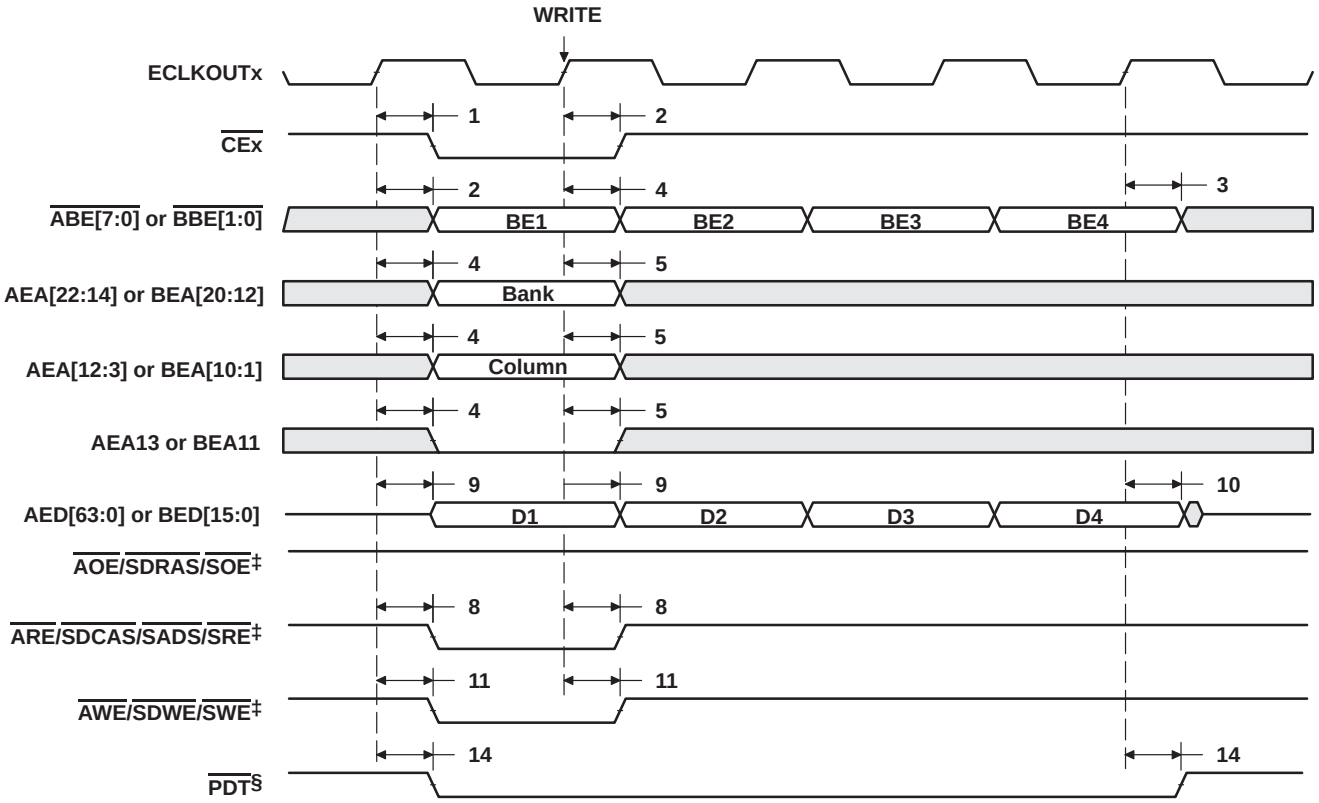

† These C64x™ devices have two EMIFs (EMIFA and EMIFB). All EMIFA signals are prefixed by an “A” and all EMIFB signals are prefixed by a “B”. Throughout the rest of this document, in generic EMIF areas of discussion, the prefix “A” or “B” may be omitted [e.g., the synchronous DRAM memory access signals are shown as generic (SDCAS, SDWE, and SDRAS) instead of ASDCAS, ASDWE, and ASDRAS (for EMIFA) and BSDCAS, BSDWE, and BSDRAS (for EMIFB)].

‡ ARE/SDCAS/SADS/SRE, AWE/SDWE/SWE, and AOE/SDRAS/SOE operate as SDCAS, SDWE, and SDRAS, respectively, during SDRAM accesses.

§ PDT signal is only asserted when the EDMA is in PDT mode (set the PDTD bit to 1 in the EDMA options parameter RAM). For PDT write, data is not driven (in High-Z). The PDTWL field in the PDT control register (PDTCTL) configures the latency of the PDT signal with respect to the data phase of a write transaction. The latency of the PDT signal for a write transaction can be programmed to 0, 1, 2, or 3 by setting PDTWL to 00, 01, 10, or 11, respectively. PDTWL equals 00 (zero latency) in Figure 28.

Figure 28. SDRAM Write Command for EMIFA and EMIFB†

SYNCHRONOUS DRAM TIMING (CONTINUED)

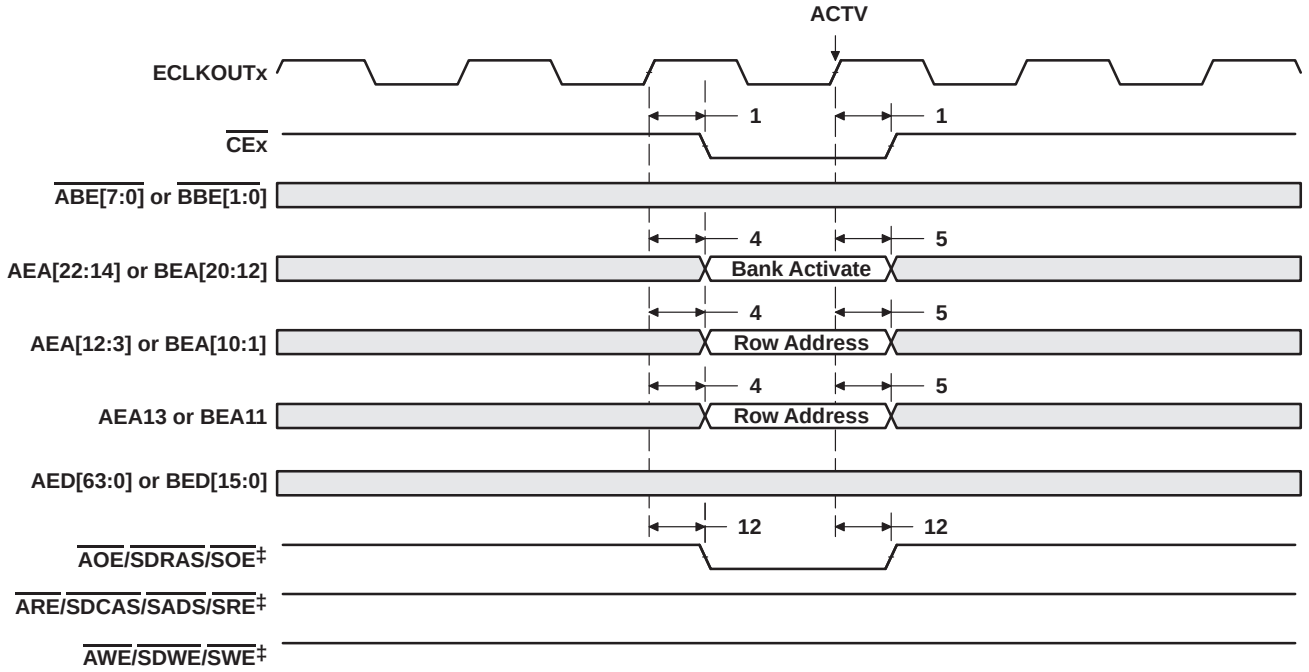

† These C64x™ devices have two EMIFs (EMIFA and EMIFB). All EMIFA signals are prefixed by an “A” and all EMIFB signals are prefixed by a “B”. Throughout the rest of this document, in generic EMIF areas of discussion, the prefix “A” or “B” may be omitted [e.g., the synchronous DRAM memory access signals are shown as generic (SDCAS, SDWE, and SDRAS) instead of ASDCAS, ASDWE, and ASDRAS (for EMIFA) and BSDCAS, BSDWE, and BSDRAS (for EMIFB)].

‡ ARE/SDCAS/SADS/SRE, AWE/SDWE/SWE, and AOE/SDRAS/SOE operate as SDCAS, SDWE, and SDRAS, respectively, during SDRAM accesses.

Figure 29. SDRAM ACTV Command for EMIFA and EMFB†

SYNCHRONOUS DRAM TIMING (CONTINUED)

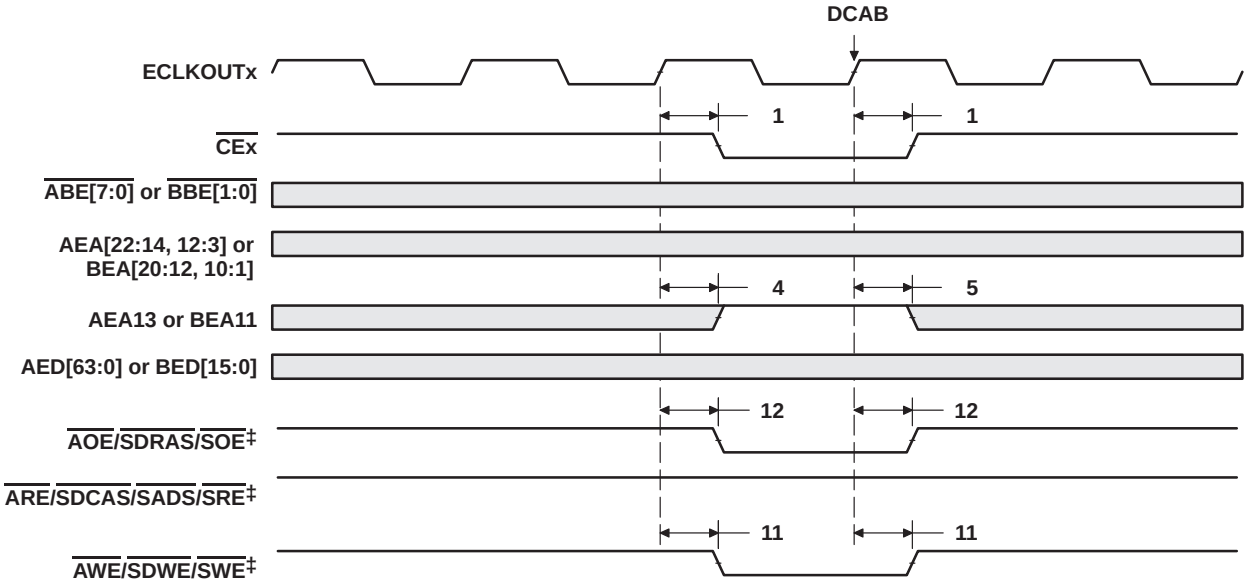

† These C64x™ devices have two EMIFs (EMIFA and EMIFB). All EMIFA signals are prefixed by an “A” and all EMIFB signals are prefixed by a “B”. Throughout the rest of this document, in generic EMIF areas of discussion, the prefix “A” or “B” may be omitted [e.g., the synchronous DRAM memory access signals are shown as generic (SDCAS, SDWE, and SDRAS) instead of ASDCAS, ASDWE, and ASDRAS (for EMIFA) and BSDCAS, BSDWE, and BSDRAS (for EMIFB)].

‡ ARE/SDCAS/SADS/SRE, AWE/SDWE/SWE, and AOE/SDRAS/SOE operate as SDCAS, SDWE, and SDRAS, respectively, during SDRAM accesses.

Figure 30. SDRAM DCAB Command for EMIFA and EMIFB†

SYNCHRONOUS DRAM TIMING (CONTINUED)

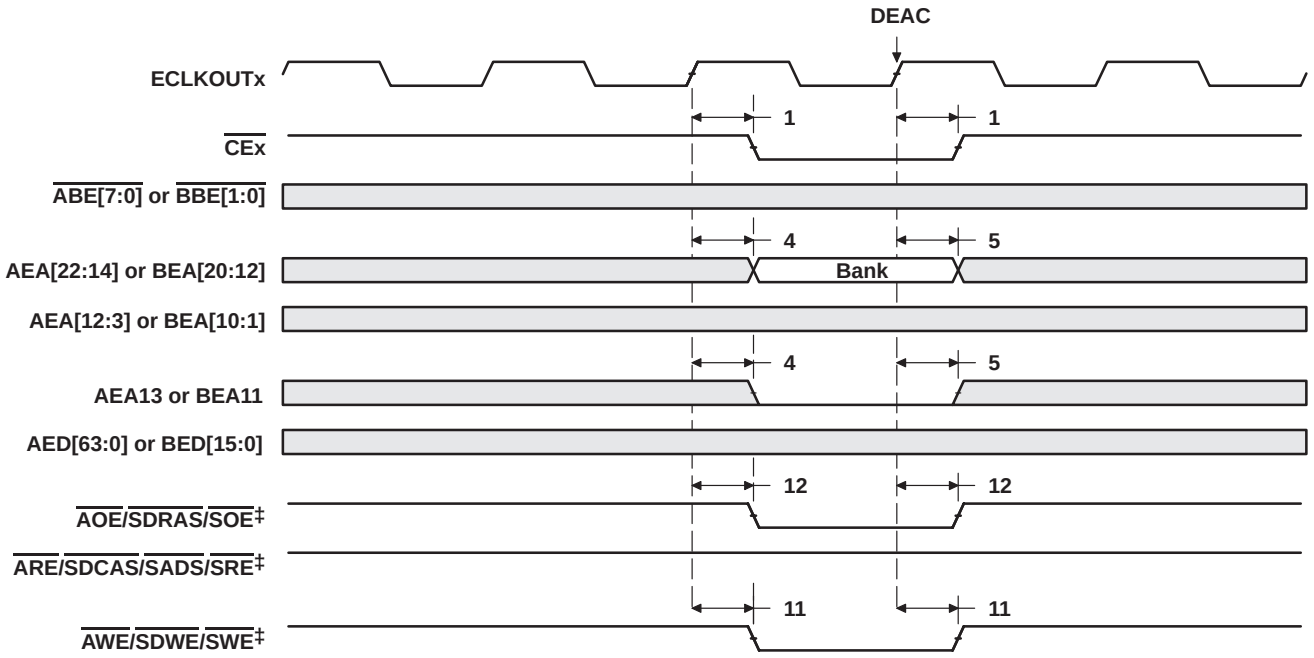

† These C64x™ devices have two EMIFs (EMIFA and EMIFB). All EMIFA signals are prefixed by an “A” and all EMIFB signals are prefixed by a “B”. Throughout the rest of this document, in generic EMIF areas of discussion, the prefix “A” or “B” may be omitted [e.g., the synchronous DRAM memory access signals are shown as generic (SDCAS, SDWE, and SDRAS) instead of ASDCAS, ASDWE, and ASDRAS (for EMIFA) and BSDCAS, BSDWE, and BSDRAS (for EMIFB)].

‡ ARE/SDCAS/SADS/SRE, AWE/SDWE/SWE, and AOE/SDRAS/SOE operate as SDCAS, SDWE, and SDRAS, respectively, during SDRAM accesses.

Figure 31. SDRAM DEAC Command for EMIFA and EMIFB†

SYNCHRONOUS DRAM TIMING (CONTINUED)

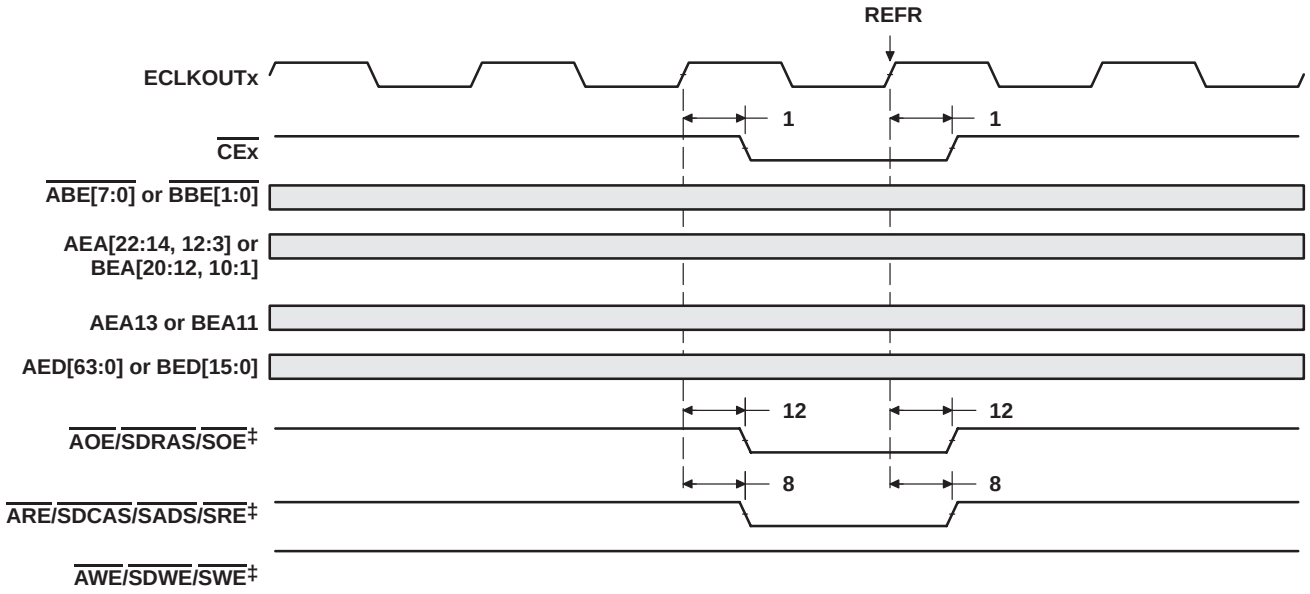

† These C64x™ devices have two EMIFs (EMIFA and EMIFB). All EMIFA signals are prefixed by an “A” and all EMIFB signals are prefixed by a “B”. Throughout the rest of this document, in generic EMIF areas of discussion, the prefix “A” or “B” may be omitted [e.g., the synchronous DRAM memory access signals are shown as generic (SDCAS, SDWE, and SDRAS) instead of ASDCAS, ASDWE, and ASDRAS (for EMIFA) and BSDCAS, BSDWE, and BSDRAS (for EMIFB)].

‡ ARE/SDCAS/SADS/SRE, AWE/SDWE/SWE, and AOE/SDRAS/SOE operate as SDCAS, SDWE, and SDRAS, respectively, during SDRAM accesses.

Figure 32. SDRAM REFR Command for EMIFA and EMIFB†

SYNCHRONOUS DRAM TIMING (CONTINUED)

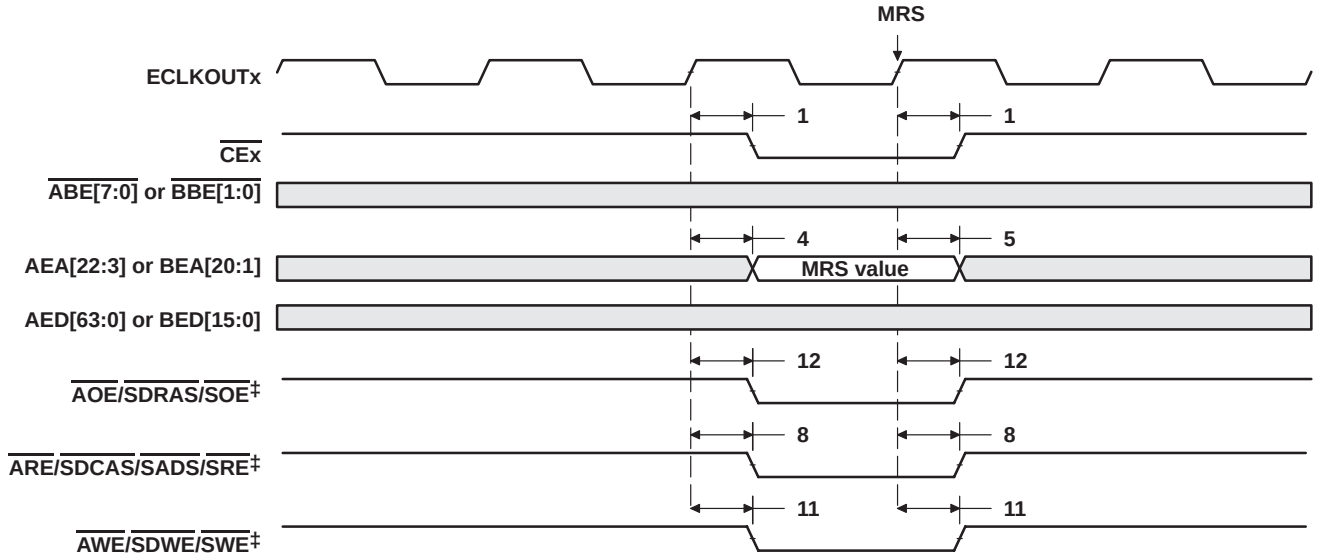

† These C64x™ devices have two EMIFs (EMIFA and EMIFB). All EMIFA signals are prefixed by an “A” and all EMIFB signals are prefixed by a “B”. Throughout the rest of this document, in generic EMIF areas of discussion, the prefix “A” or “B” may be omitted [e.g., the synchronous DRAM memory access signals are shown as generic (SDCAS, SDWE, and SDRAS) instead of ASDCAS, ASDWE, and ASDRAS (for EMIFA) and BSDCAS, BSDWE, and BSDRAS (for EMIFB)].

‡ ARE/SDCAS/SADS/SRE, AWE/SDWE/SWE, and AOE/SDRAS/SOE operate as SDCAS, SDWE, and SDRAS, respectively, during SDRAM accesses.

Figure 33. SDRAM MRS Command for EMIFA and EMIFB†

SYNCHRONOUS DRAM TIMING (CONTINUED)

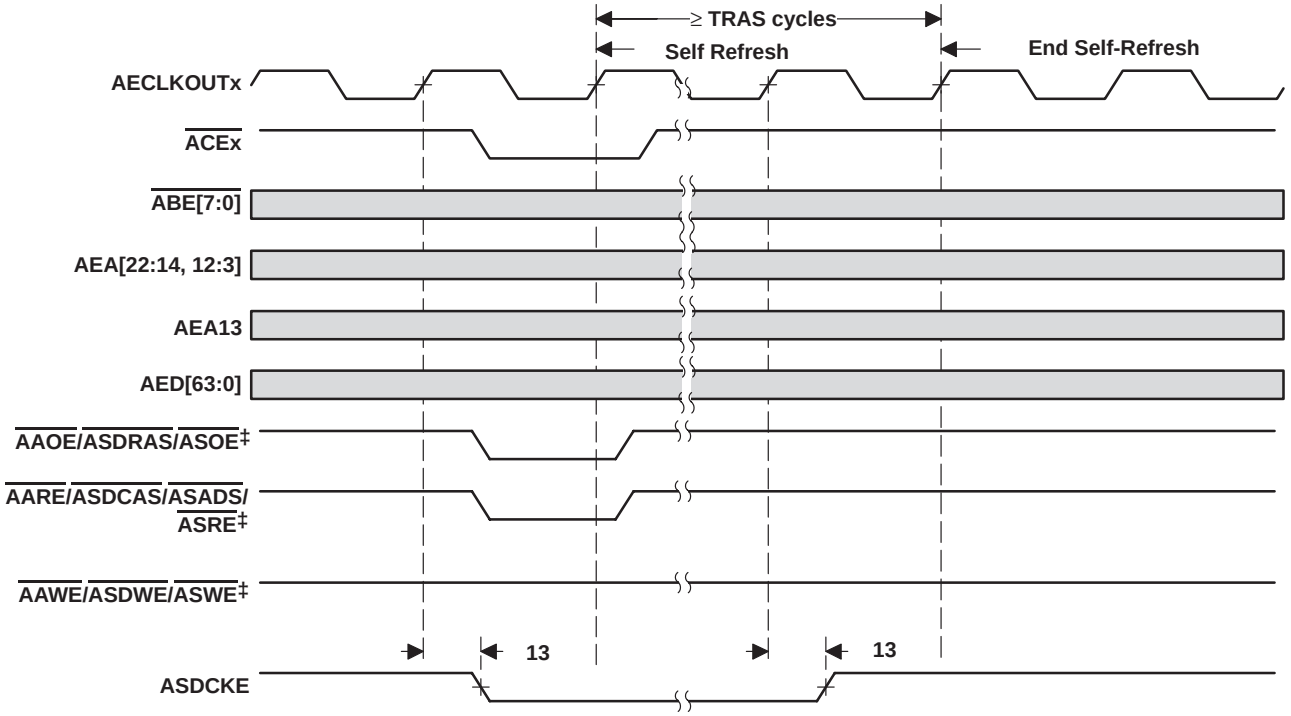

† These C64x™ devices have two EMIFs (EMIFA and EMIFB). All EMIFA signals are prefixed by an “A” and all EMIFB signals are prefixed by a “B”. Throughout the rest of this document, in generic EMIF areas of discussion, the prefix “A” or “B” may be omitted [e.g., the synchronous DRAM memory access signals are shown as generic (SDCAS, SDWE, and SDRAS) instead of ASDCAS, ASDWE, and ASDRAS (for EMIFA) and BSDCAS, BSDWE, and BSDRAS (for EMIFB)].

‡ AARE/ASDCAS/ASADS/ASRE, AAWE/ASDWE/ASWE, and AAOE/ASDRAS/ASOE operate as ASDCAS, ASDWE, and ASDRAS, respectively, during SDRAM accesses.

Figure 34. SDRAM Self-Refresh Timing for EMIFA Only†

$\overline{\text{HOLD}}$/$\overline{\text{HOLDA}}$ TIMING

timing requirements for the $\overline{\text{HOLD}}$/$\overline{\text{HOLDA}}$ cycles for EMIFA and EMIFB modules† (see Figure 35)

NO.		−600 −720 MIN	−600 −720 MAX	UNIT
3	$t_{h(HOLDAL-HOLDL)}$ Hold time, $\overline{\text{HOLD}}$ low after $\overline{\text{HOLDA}}$ low	E		ns

† E = the EMIF input clock (ECLKIN, CPU/4 clock, or CPU/6 clock) period in ns for EMIFA or EMIFB.

switching characteristics over recommended operating conditions for the $\overline{\text{HOLD}}$/$\overline{\text{HOLDA}}$ cycles for EMIFA and EMIFB modules†‡§ (see Figure 35)

NO.	PARAMETER		−600 −720 MIN	−600 −720 MAX	UNIT
1	$t_{d(HOLDL-EMHZ)}$	Delay time, $\overline{\text{HOLD}}$ low to EMIF Bus high impedance	2E	¶	ns
2	$t_{d(EMHZ-HOLDAL)}$	Delay time, EMIF Bus high impedance to $\overline{\text{HOLDA}}$ low	0	2E	ns
4	$t_{d(HOLDH-EMLZ)}$	Delay time, $\overline{\text{HOLD}}$ high to EMIF Bus low impedance	2E	7E	ns
5	$t_{d(EMLZ-HOLDAH)}$	Delay time, EMIF Bus low impedance to $\overline{\text{HOLDA}}$ high	0	2E	ns
6	$t_{d(HOLDL-EKOHZ)}$	Delay time, $\overline{\text{HOLD}}$ low to ECLKOUTx high impedance	2E	¶	ns
7	$t_{d(HOLDH-EKOLZ)}$	Delay time, $\overline{\text{HOLD}}$ high to ECLKOUTx low impedance	2E	7E	ns

† E = the EMIF input clock (ECLKIN, CPU/4 clock, or CPU/6 clock) period in ns for EMIFA or EMIFB.
‡ For EMIFA, EMIF Bus consists of: $\overline{\text{ACE}}$[3:0], $\overline{\text{ABE}}$[7:0], AED[63:0], AEA[22:3], $\overline{\text{AARE}}$/$\overline{\text{ASDCAS}}$/$\overline{\text{ASADS}}$/$\overline{\text{ASRE}}$, $\overline{\text{AAOE}}$/$\overline{\text{ASDRAS}}$/$\overline{\text{ASOE}}$, and $\overline{\text{AAWE}}$/$\overline{\text{ASDWE}}$/$\overline{\text{ASWE}}$, ASDCKE, $\overline{\text{ASOE3}}$, and $\overline{\text{APDT}}$.
For EMIFB, EMIF Bus consists of: $\overline{\text{BCE}}$[3:0], $\overline{\text{BBE}}$[1:0], BED[15:0], BEA[20:1], $\overline{\text{BARE}}$/$\overline{\text{BSDCAS}}$/$\overline{\text{BSADS}}$/$\overline{\text{BSRE}}$, $\overline{\text{BAOE}}$/$\overline{\text{BSDRAS}}$/$\overline{\text{BSOE}}$, and $\overline{\text{BAWE}}$/$\overline{\text{BSDWE}}$/$\overline{\text{BSWE}}$, $\overline{\text{BSOE3}}$, and $\overline{\text{BPDT}}$.
§ The EKxHZ bits in the EMIF Global Control register (GBLCTL) determine the state of the ECLKOUTx signals during $\overline{\text{HOLDA}}$. If EKxHZ = 0, ECLKOUTx continues clocking during Hold mode. If EKxHZ = 1, ECLKOUTx goes to high impedance during Hold mode, as shown in Figure 35.
¶ All pending EMIF transactions are allowed to complete before $\overline{\text{HOLDA}}$ is asserted. If no bus transactions are occurring, then the minimum delay time can be achieved. Also, bus hold can be indefinitely delayed by setting NOHOLD = 1.

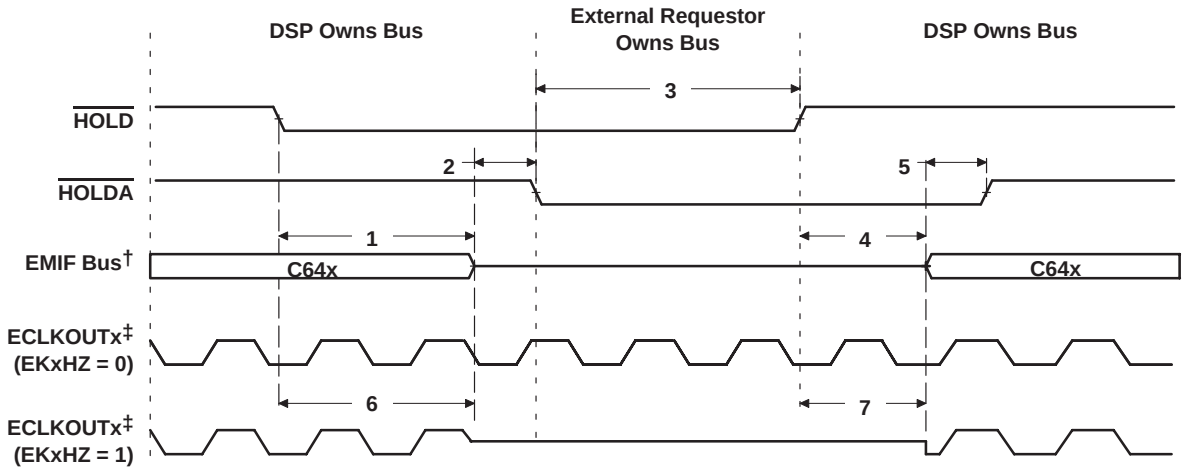

† For EMIFA, EMIF Bus consists of: $\overline{\text{ACE}}$[3:0], $\overline{\text{ABE}}$[7:0], AED[63:0], AEA[22:3], $\overline{\text{AARE}}$/$\overline{\text{ASDCAS}}$/$\overline{\text{ASADS}}$/$\overline{\text{ASRE}}$, $\overline{\text{AAOE}}$/$\overline{\text{ASDRAS}}$/$\overline{\text{ASOE}}$, and $\overline{\text{AAWE}}$/$\overline{\text{ASDWE}}$/$\overline{\text{ASWE}}$, ASDCKE, $\overline{\text{ASOE3}}$, and $\overline{\text{APDT}}$.
For EMIFB, EMIF Bus consists of: $\overline{\text{BCE}}$[3:0], $\overline{\text{BBE}}$[1:0], BED[15:0], BEA[20:1], $\overline{\text{BARE}}$/$\overline{\text{BSDCAS}}$/$\overline{\text{BSADS}}$/$\overline{\text{BSRE}}$, $\overline{\text{BAOE}}$/$\overline{\text{BSDRAS}}$/$\overline{\text{BSOE}}$, and $\overline{\text{BAWE}}$/$\overline{\text{BSDWE}}$/$\overline{\text{BSWE}}$, $\overline{\text{BSOE3}}$, and $\overline{\text{BPDT}}$.
‡ The EKxHZ bits in the EMIF Global Control register (GBLCTL) determine the state of the ECLKOUTx signals during $\overline{\text{HOLDA}}$. If EKxHZ = 0, ECLKOUTx continues clocking during Hold mode. If EKxHZ = 1, ECLKOUTx goes to high impedance during Hold mode, as shown in Figure 35.

Figure 35. $\overline{\text{HOLD}}$/$\overline{\text{HOLDA}}$ Timing for EMIFA and EMIFB

BUSREQ TIMING

switching characteristics over recommended operating conditions for the BUSREQ cycles for EMIFA and EMIFB modules (see Figure 36)

NO.	PARAMETER		−600 −720		UNIT
			MIN	MAX	
1	$t_{d(AEKO1H-ABUSRV)}$	Delay time, AECLKOUTx high to ABUSREQ valid	1	5.5	ns
2	$t_{d(BEKO1H-BBUSRV)}$	Delay time, BECLKOUTx high to BBUSREQ valid	0.9	5.5	ns

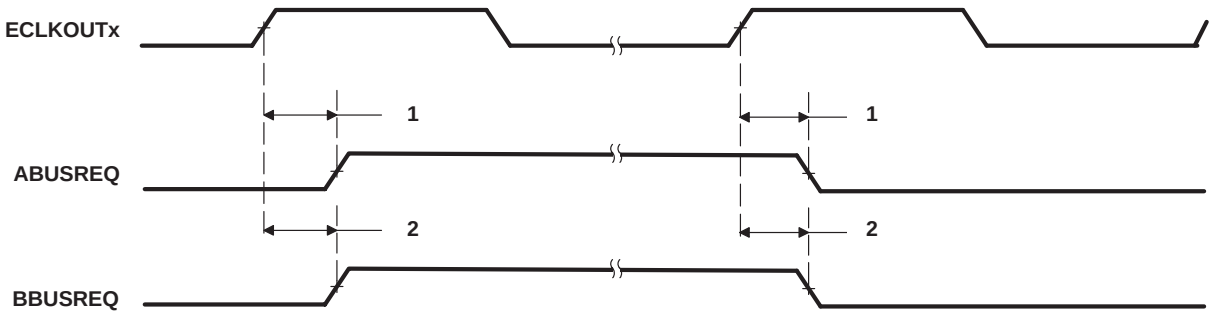

Figure 36. BUSREQ Timing for EMIFA and EMIFB

RESET TIMING

timing requirements for reset† (see Figure 37)

NO.			−600 −720 MIN	−600 −720 MAX	UNIT
1	$t_{w(RST)}$	Width of the $\overline{RESET}$ pulse (PLL stable)‡	250		µs
		Width of the $\overline{RESET}$ pulse (PLL needs to sync up)§	250		µs
16	$t_{su(boot)}$	Setup time, boot configuration bits valid before $\overline{RESET}$ high¶	4E or 4C#		ns
17	$t_{h(boot)}$	Hold time, boot configuration bits valid after $\overline{RESET}$ high¶	4P		ns
18	$t_{su(PCLK-RSTH)}$	Setup time, PCLK active before $\overline{RESET}$ high‖	32N		ns

† P = 1/CPU clock frequency in ns. For example, when running parts at 720 MHz, use P = 1.39 ns.
‡ This parameter applies to CLKMODE x1 when CLKIN is stable, and applies to CLKMODE x6, x12, x20 when CLKIN and PLL are stable.
§ This parameter applies to CLKMODE x6, x12, x20 only (it does not apply to CLKMODE x1). The $\overline{RESET}$ signal is not connected internally to the clock PLL circuit. The PLL, however, may need up to 250 µs to stabilize following device power up or after PLL configuration has been changed. During that time, $\overline{RESET}$ must be asserted to ensure proper device operation. See the *clock PLL* section for PLL lock times.
¶ EMIFB address pins BEA[20:13, 11, 9:7] are the boot configuration pins during device reset.
# E = 1/AECLKIN clock frequency in ns. C = 1/CLKIN clock frequency in ns. Select whichever value is larger for the **MIN** parameter.
‖ N = the PCI input clock (PCLK) period in ns. When PCI is enabled (PCI_EN = 1), this parameter ***must*** be met.

switching characteristics over recommended operating conditions during reset†☆□ (see Figure 37)

NO.	PARAMETER		−600 −720 MIN	−600 −720 MAX	UNIT
2	$t_{d(RSTL-ECKI)}$	Delay time, $\overline{RESET}$ low to ECLKIN synchronized internally	2E	3P + 20E	ns
3	$t_{d(RSTH-ECKI)}$	Delay time, $\overline{RESET}$ high to ECLKIN synchronized internally	2E	16 070P	ns
4	$t_{d(RSTL-ECKO1HZ)}$	Delay time, $\overline{RESET}$ low to ECLKOUT1 high impedance	2E		ns
5	$t_{d(RSTH-ECKO1V)}$	Delay time, $\overline{RESET}$ high to ECLKOUT1 valid		16 070P	ns
6	$t_{d(RSTL-EMIFZHZ)}$	Delay time, $\overline{RESET}$ low to EMIF Z high impedance	2E	3P + 4E	ns
7	$t_{d(RSTH-EMIFZV)}$	Delay time, $\overline{RESET}$ high to EMIF Z valid	16E	16 070P	ns
8	$t_{d(RSTL-EMIFHIV)}$	Delay time, $\overline{RESET}$ low to EMIF high group invalid	2E		ns
9	$t_{d(RSTH-EMIFHV)}$	Delay time, $\overline{RESET}$ high to EMIF high group valid		16 070P	ns
10	$t_{d(RSTL-EMIFLIV)}$	Delay time, $\overline{RESET}$ low to EMIF low group invalid	2E		ns
11	$t_{d(RSTH-EMIFLV)}$	Delay time, $\overline{RESET}$ high to EMIF low group valid		16 070P	ns
12	$t_{d(RSTL-LOWIV)}$	Delay time, $\overline{RESET}$ low to low group invalid	0		ns
13	$t_{d(RSTH-LOWV)}$	Delay time, $\overline{RESET}$ high to low group valid		16 070P	ns
14	$t_{d(RSTL-ZHZ)}$	Delay time, $\overline{RESET}$ low to Z group high impedance	0		ns
15	$t_{d(RSTH-ZV)}$	Delay time, $\overline{RESET}$ high to Z group valid	2P	16 070P	ns

† P = 1/CPU clock frequency in ns. For example, when running parts at 720 MHz, use P = 1.39 ns.
☆E = the EMIF input clock (ECLKIN, CPU/4 clock, or CPU/6 clock) period in ns for EMIFA or EMIFB.
□EMIF Z group consists of: AEA[22:3], BEA[20:1], AED[63:0], BED[15:0], CE[3:0], ABE[7:0], BBE[1:0], ARE/SDCAS/SADS/SRE, AWE/SDWE/SWE, and AOE/SDRAS/SOE, SOE3, ASDCKE, and PDT.
EMIF high group consists of: AHOLDA and BHOLDA (when the corresponding HOLD input is high)
EMIF low group consists of: ABUSREQ and BBUSREQ; AHOLDA and BHOLDA (when the corresponding HOLD input is low)
Low group consists of: XSP_CS, CLKX2/XSP_CLK, and DX2/XSP_DO; all of which apply only when PCI EEPROM (BEA13) is enabled (with PCI_EN = 1 and MCBSP2_EN = 0). Otherwise, the CLKX2/XSP_CLK and DX2/XSP_DO pins are in the Z group. For more details on the PCI configuration pins, see the Device Configurations section of this data sheet.
Z group consists of: HD[31:0]/AD[31:0], CLKX0, CLKX1/URADDR4, CLKX2/XSP_CLK, FSX0, FSX1/UXADDR3, FSX2, DX0, DX1/UXADDR4, DX2/XSP_DO, CLKR0, CLKR1/URADDR2, CLKR2, FSR0, FSR1/UXADDR2, FSR2, TOUT0, TOUT1, TOUT2, GP[8:0], GP10/PCBE3, HR/W/PCBE2, HDS2/PCBE1, PCBE0, GP13/PINTA, GP11/PREQ, HDS1/PSERR, HCS/PPERR, HCNTL1/PDEVSEL, HAS/PPAR, HCNTL0/PSTOP, HHWIL/PTRDY (16-bit HPI mode only), HRDY/PIRDY, HINT/PFRAME, UXDATA[7:0], UXSOC, UXCLAV, and URCLAV.

RESET TIMING (CONTINUED)

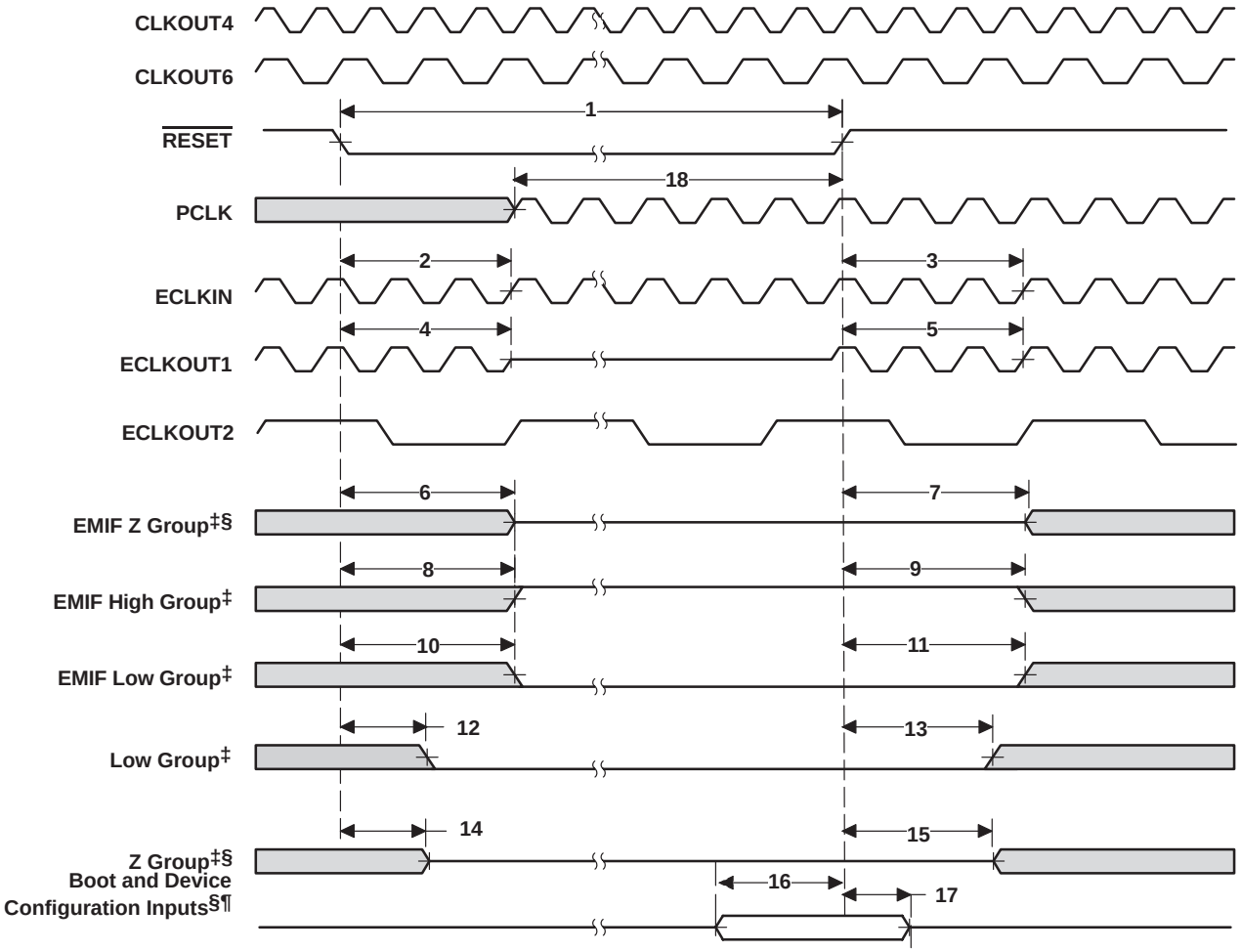

† These C64x™ devices have two EMIFs (EMIFA and EMIFB). All EMIFA signals are prefixed by an “A” and all EMIFB signals are prefixed by a “B”. Throughout the rest of this document, in generic EMIF areas of discussion, the prefix “A” or “B” may be omitted [e.g., ECLKIN, ECLKOUT1, and ECLKOUT2].

‡ EMIF Z group consists of: AEA[22:3], BEA[20:1], AED[63:0], BED[15:0], $\overline{\text{CE}}$[3:0], $\overline{\text{ABE}}$[7:0], $\overline{\text{BBE}}$[1:0], $\overline{\text{ARE}}$/$\overline{\text{SDCAS}}$/$\overline{\text{SADS}}$/$\overline{\text{SRE}}$, $\overline{\text{AWE}}$/$\overline{\text{SDWE}}$/$\overline{\text{SWE}}$, and $\overline{\text{AOE}}$/$\overline{\text{SDRAS}}$/$\overline{\text{SOE}}$, $\overline{\text{SOE3}}$, ASDCKE, and $\overline{\text{PDT}}$.

EMIF high group consists of: $\overline{\text{AHOLDA}}$ and $\overline{\text{BHOLDA}}$ (when the corresponding $\overline{\text{HOLD}}$ input is high)

EMIF low group consists of: ABUSREQ and BBUSREQ; $\overline{\text{AHOLDA}}$ and $\overline{\text{BHOLDA}}$ (when the corresponding $\overline{\text{HOLD}}$ input is low)

Low group consists of: XSP_CS, CLKX2/XSP_CLK, and DX2/XSP_DO; all of which apply only when PCI EEPROM (BEA13) is enabled (with PCI_EN = 1 and MCBSP2_EN = 0). Otherwise, the CLKX2/XSP_CLK and DX2/XSP_DO pins are in the Z group. For more details on the PCI configuration pins, see the Device Configurations section of this data sheet.

Z group consists of: HD[31:0]/AD[31:0], CLKX0, CLKX1/URADDR4, CLKX2/XSP_CLK, FSX0, FSX1/UXADDR3, FSX2, DX0, DX1/UXADDR4, DX2/XSP_DO, CLKR0, CLKR1/URADDR2, CLKR2, FSR0, FSR1/UXADDR2, FSR2, TOUT0, TOUT1, TOUT2, GP[8:0], GP10/PCBE3, HR/$\overline{\text{W}}$/PCBE2, $\overline{\text{HDS2}}$/PCBE1, $\overline{\text{PCBE0}}$, GP13/PINTA, GP11/$\overline{\text{PREQ}}$, $\overline{\text{HDS1}}$/PSERR, $\overline{\text{HCS}}$/PPERR, HCNTL1/$\overline{\text{PDEVSEL}}$, $\overline{\text{HAS}}$/PPAR, HCNTL0/PSTOP, HHWIL/$\overline{\text{PTRDY}}$ (16-bit HPI mode only), $\overline{\text{HRDY}}$/PIRDY, $\overline{\text{HINT}}$/$\overline{\text{PFRAME}}$, UXDATA[7:0], UXSOC, UXCLAV, and URCLAV.

§ If BEA[20:13, 11, 7] and HD5/AD5 pins are actively driven, care must be taken to ensure no timing contention between parameters 6, 7, 14, 15, 16, and 17.

¶ Boot and Device Configurations Inputs (during reset) include: EMIFB address pins BEA[20:13, 11, 9:7] and HD5/AD5.
The PCI_EN pin *must* be driven valid at all times and the user *must not* switch values throughout device operation.
The MCBSP2_EN pin *must* be driven valid at all times and the user *can* switch values throughout device operation.

Figure 37. Reset Timing†

EXTERNAL INTERRUPT TIMING

timing requirements for external interrupts† (see Figure 38)

NO.			−600 −720		UNIT
			MIN	MAX	
1	$t_{w(ILOW)}$	Width of the NMI interrupt pulse low	4P		ns
		Width of the EXT_INT interrupt pulse low	8P		ns
2	$t_{w(IHIGH)}$	Width of the NMI interrupt pulse high	4P		ns
		Width of the EXT_INT interrupt pulse high	8P		ns

† P = 1/CPU clock frequency in ns. For example, when running parts at 720 MHz, use P = 1.39 ns.

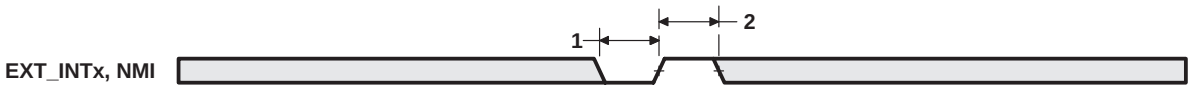

Figure 38. External/NMI Interrupt Timing

HOST-PORT INTERFACE (HPI) TIMING

timing requirements for host-port interface cycles†‡ (see Figure 39 through Figure 46)

NO.			−600 −720		UNIT
			MIN	MAX	
19+	$t_{su(SELV-HSTBL)}$	Setup time, select signals§ valid before $\overline{HSTROBE}$ low	5		ns
2	$t_{h(HSTBL-SELV)}$	Hold time, select signals§ valid after $\overline{HSTROBE}$ low	2.4		ns
3	$t_{w(HSTBL)}$	Pulse duration, $\overline{HSTROBE}$ low	4P¶		ns
4	$t_{w(HSTBH)}$	Pulse duration, $\overline{HSTROBE}$ high between consecutive accesses	4P		ns
10	$t_{su(SELV-HASL)}$	Setup time, select signals§ valid before $\overline{HAS}$ low	5		ns
11	$t_{h(HASL-SELV)}$	Hold time, select signals§ valid after $\overline{HAS}$ low	2		ns
12	$t_{su(HDV-HSTBH)}$	Setup time, host data valid before $\overline{HSTROBE}$ high	5		ns
13	$t_{h(HSTBH-HDV)}$	Hold time, host data valid after $\overline{HSTROBE}$ high	2.8		ns
14	$t_{h(HRDYL-HSTBL)}$	Hold time, $\overline{HSTROBE}$ low after $\overline{HRDY}$ low. $\overline{HSTROBE}$ should not be inactivated until $\overline{HRDY}$ is active (low); otherwise, HPI writes will not complete properly.	2		ns
18	$t_{su(HASL-HSTBL)}$	Setup time, $\overline{HAS}$ low before $\overline{HSTROBE}$ low	2		ns
19	$t_{h(HSTBL-HASL)}$	Hold time, $\overline{HAS}$ low after $\overline{HSTROBE}$ low	2.1		ns

† $\overline{HSTROBE}$ refers to the following logical operation on $\overline{HCS}$, $\overline{HDS1}$, and $\overline{HDS2}$: [NOT($\overline{HDS1}$ XOR $\overline{HDS2}$)] OR $\overline{HCS}$.
‡ P = 1/CPU clock frequency in ns. For example, when running parts at 720 MHz, use P = 1.39 ns.
§ Select signals include: HCNTL[1:0] and HR/$\overline{W}$. For HPI16 mode only, select signals also include HHWIL.
¶ Select the parameter value of 4P or 12.5 ns, whichever is greater.

switching characteristics over recommended operating conditions during host-port interface cycles†‡ (see Figure 39 through Figure 46)

NO.	PARAMETER		−600 −720		UNIT
			MIN	MAX	
6	$t_{d(HSTBL-HRDYH)}$	Delay time, $\overline{HSTROBE}$ low to $\overline{HRDY}$ high#	1.3	4P + 8	ns
7	$t_{d(HSTBL-HDLZ)}$	Delay time, $\overline{HSTROBE}$ low to HD low impedance for an HPI read	2		ns
8	$t_{d(HDV-HRDYL)}$	Delay time, HD valid to $\overline{HRDY}$ low	−3		ns
9	$t_{oh(HSTBH-HDV)}$	Output hold time, HD valid after $\overline{HSTROBE}$ high	1.5		ns
15	$t_{d(HSTBH-HDHZ)}$	Delay time, $\overline{HSTROBE}$ high to HD high impedance		12	ns
16	$t_{d(HSTBL-HDV)}$	Delay time, $\overline{HSTROBE}$ low to HD valid (HPI16 mode, 2nd half-word only)		4P + 8	ns

† $\overline{HSTROBE}$ refers to the following logical operation on $\overline{HCS}$, $\overline{HDS1}$, and $\overline{HDS2}$: [NOT($\overline{HDS1}$ XOR $\overline{HDS2}$)] OR $\overline{HCS}$.
‡ P = 1/CPU clock frequency in ns. For example, when running parts at 720 MHz, use P = 1.39 ns.
# This parameter is used during HPID reads and writes. For reads, at the beginning of a word transfer (HPI32) or the first half-word transfer (HPI16) on the falling edge of $\overline{HSTROBE}$, the HPI sends the request to the EDMA internal address generation hardware, and $\overline{HRDY}$ remains high until the EDMA internal address generation hardware loads the requested data into HPID. For writes, $\overline{HRDY}$ goes high if the internal write buffer is full.

HOST-PORT INTERFACE (HPI) TIMING (CONTINUED)

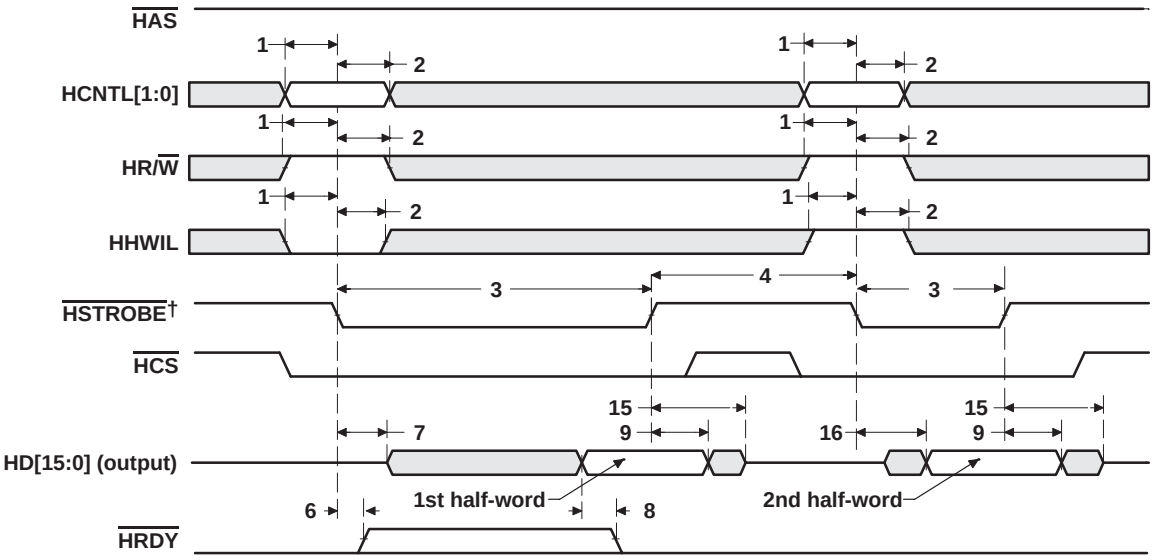

† $\overline{\text{HSTROBE}}$ refers to the following logical operation on $\overline{\text{HCS}}$, $\overline{\text{HDS1}}$, and $\overline{\text{HDS2}}$: [NOT($\overline{\text{HDS1}}$ XOR $\overline{\text{HDS2}}$)] OR $\overline{\text{HCS}}$.

Figure 39. HPI16 Read Timing ($\overline{\text{HAS}}$ Not Used, Tied High)

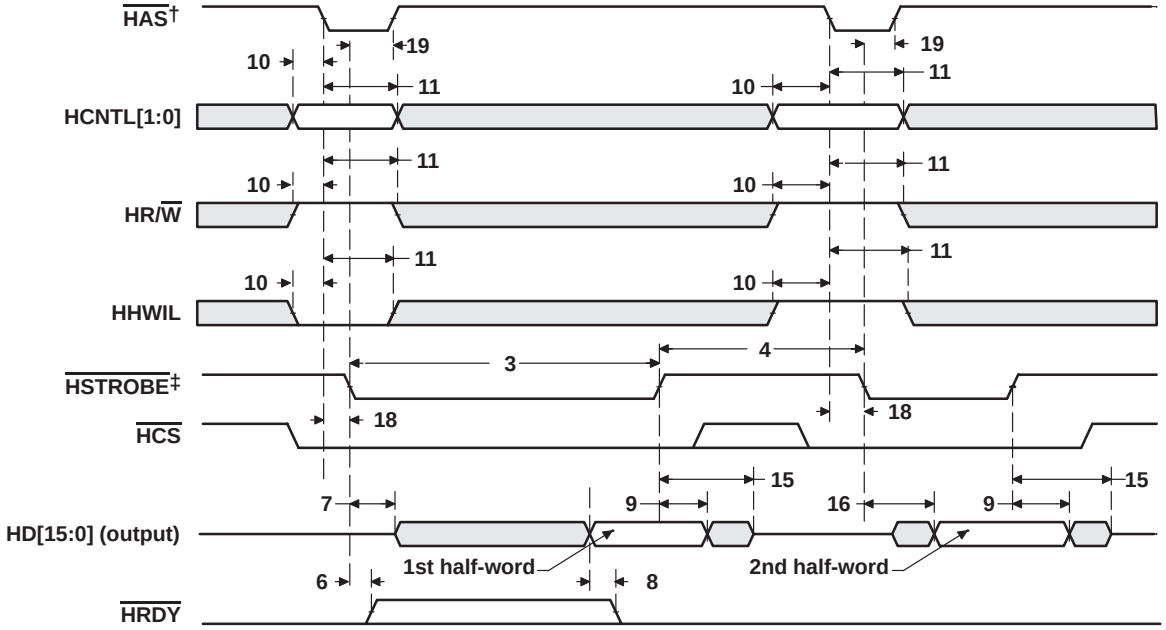

† For correct operation, strobe the $\overline{\text{HAS}}$ signal only once per $\overline{\text{HSTROBE}}$ active cycle.
‡ $\overline{\text{HSTROBE}}$ refers to the following logical operation on $\overline{\text{HCS}}$, $\overline{\text{HDS1}}$, and $\overline{\text{HDS2}}$: [NOT($\overline{\text{HDS1}}$ XOR $\overline{\text{HDS2}}$)] OR $\overline{\text{HCS}}$.

Figure 40. HPI16 Read Timing ($\overline{\text{HAS}}$ Used)

HOST-PORT INTERFACE (HPI) TIMING (CONTINUED)

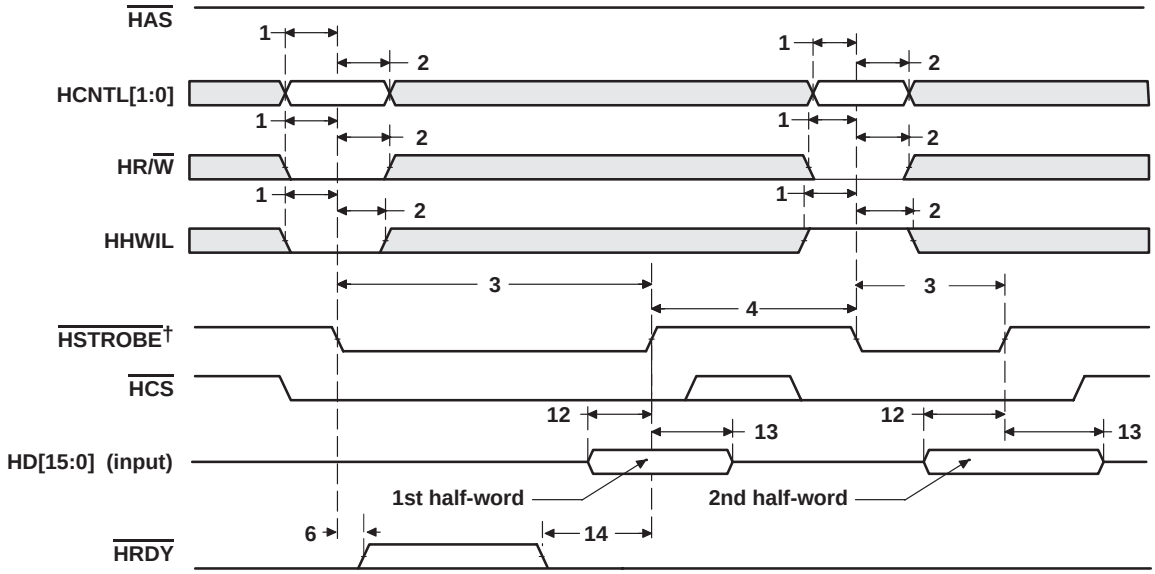

† $\overline{\text{HSTROBE}}$ refers to the following logical operation on $\overline{\text{HCS}}$, $\overline{\text{HDS1}}$, and $\overline{\text{HDS2}}$: [NOT($\overline{\text{HDS1}}$ XOR $\overline{\text{HDS2}}$)] OR $\overline{\text{HCS}}$.

Figure 41. HPI16 Write Timing ($\overline{\text{HAS}}$ Not Used, Tied High)

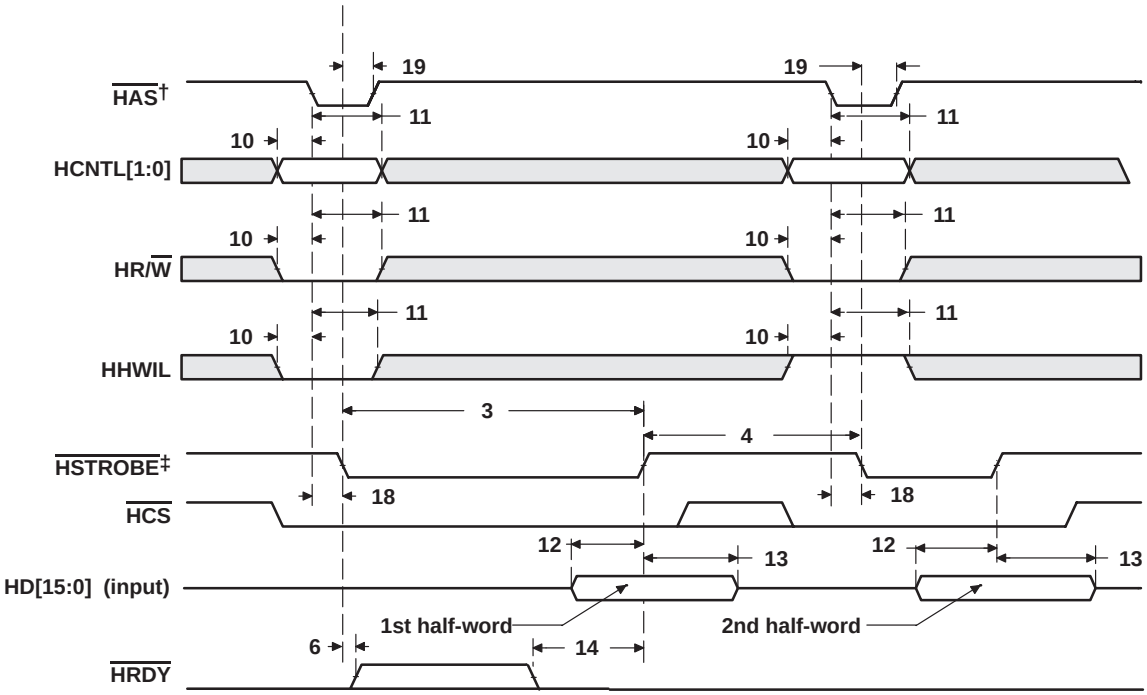

† For correct operation, strobe the $\overline{\text{HAS}}$ signal only once per $\overline{\text{HSTROBE}}$ active cycle.
‡ $\overline{\text{HSTROBE}}$ refers to the following logical operation on $\overline{\text{HCS}}$, $\overline{\text{HDS1}}$, and $\overline{\text{HDS2}}$: [NOT($\overline{\text{HDS1}}$ XOR $\overline{\text{HDS2}}$)] OR $\overline{\text{HCS}}$.

Figure 42. HPI16 Write Timing ($\overline{\text{HAS}}$ Used)

HOST-PORT INTERFACE (HPI) TIMING (CONTINUED)

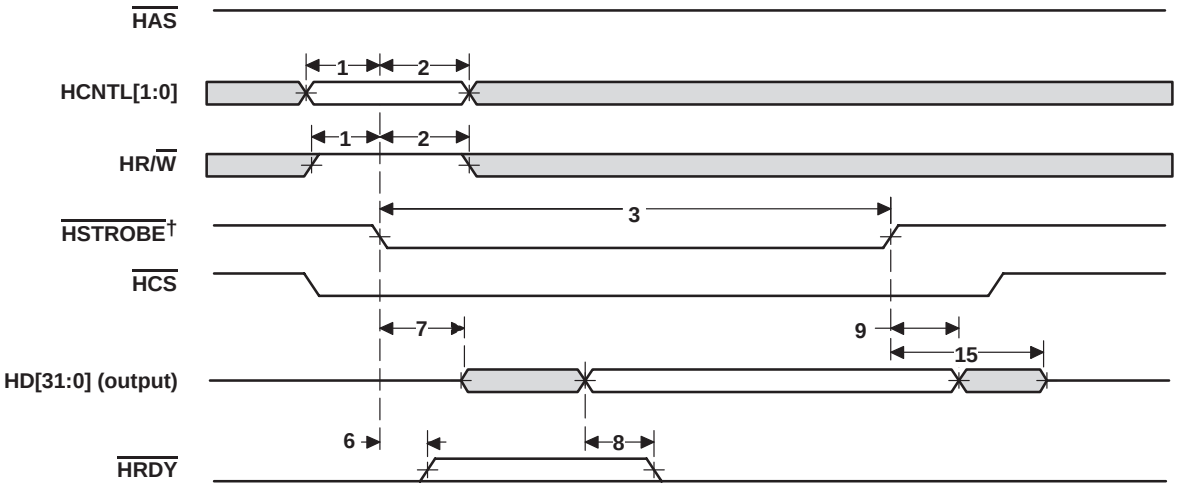

† HSTROBE refers to the following logical operation on HCS, HDS1, and HDS2: [NOT(HDS1 XOR HDS2)] OR HCS.

Figure 43. HPI32 Read Timing (HAS Not Used, Tied High)

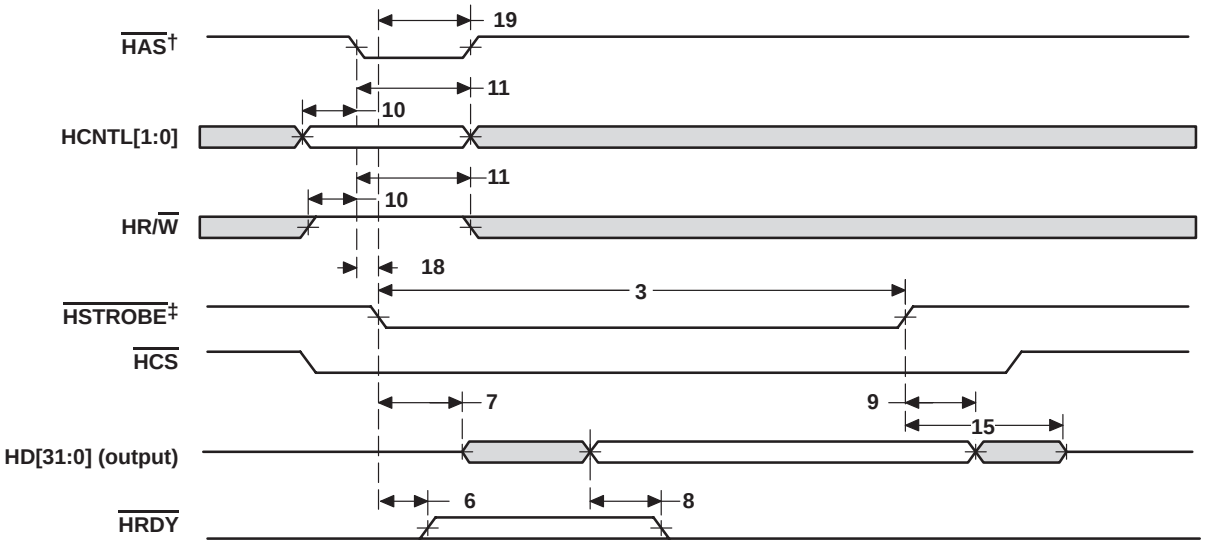

† For correct operation, strobe the HAS signal only once per HSTROBE active cycle.
‡ HSTROBE refers to the following logical operation on HCS, HDS1, and HDS2: [NOT(HDS1 XOR HDS2)] OR HCS.

Figure 44. HPI32 Read Timing (HAS Used)

HOST-PORT INTERFACE (HPI) TIMING (CONTINUED)

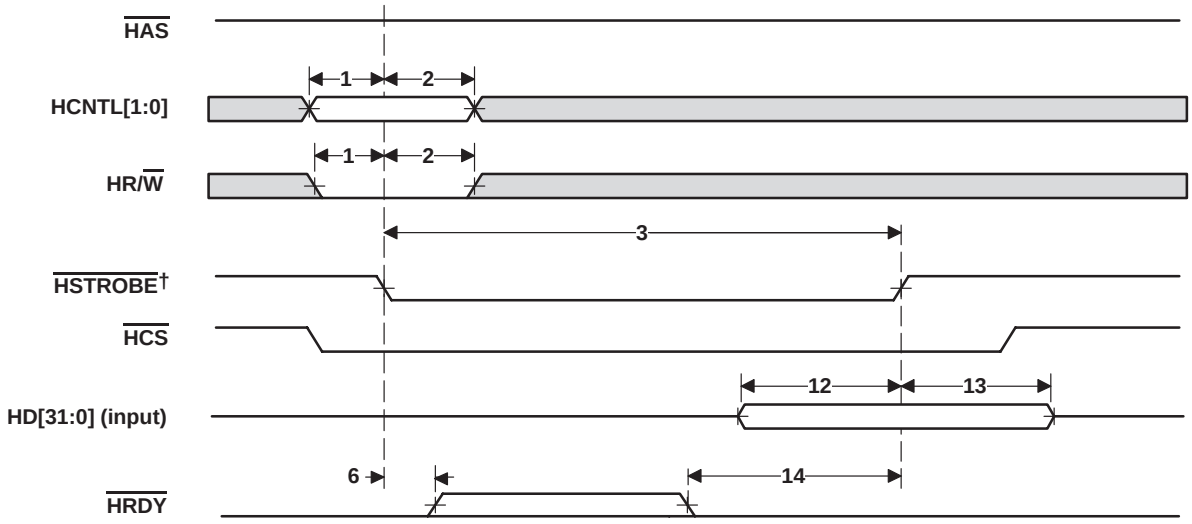

† HSTROBE refers to the following logical operation on HCS, HDS1, and HDS2: [NOT(HDS1 XOR HDS2)] OR HCS.

Figure 45. HPI32 Write Timing (HAS Not Used, Tied High)

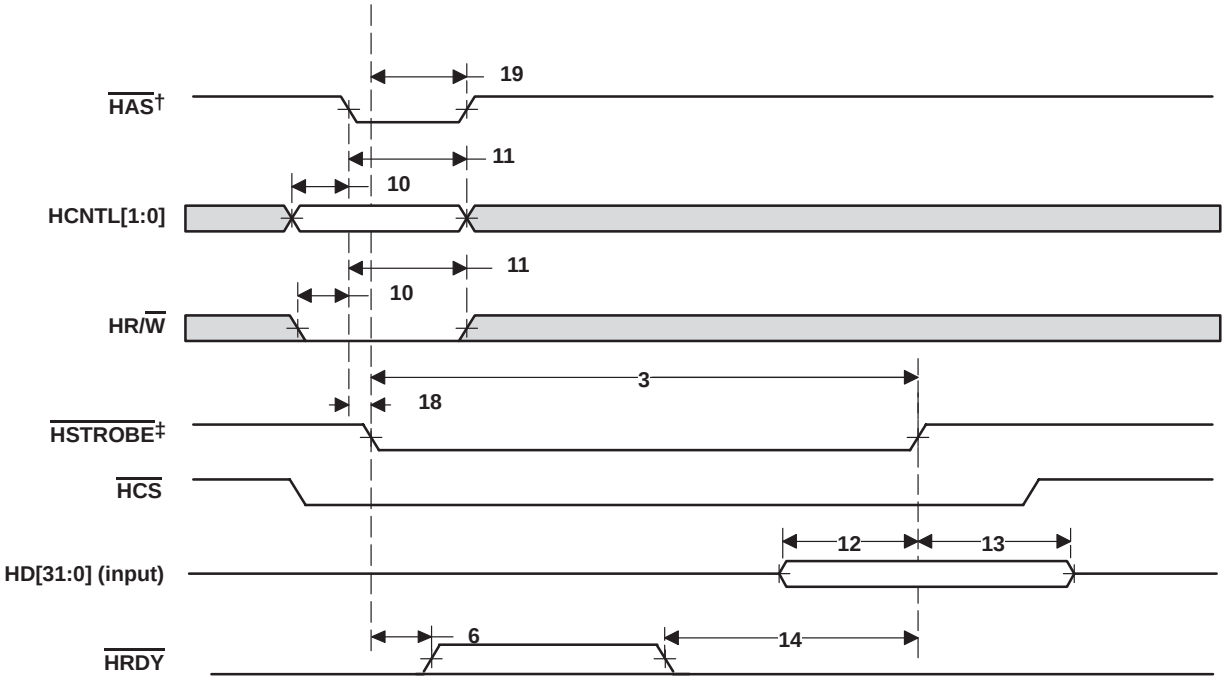

† For correct operation, strobe the HAS signal only once per HSTROBE active cycle.
‡ HSTROBE refers to the following logical operation on HCS, HDS1, and HDS2: [NOT(HDS1 XOR HDS2)] OR HCS.

Figure 46. HPI32 Write Timing (HAS Used)

PERIPHERAL COMPONENT INTERCONNECT (PCI) TIMING

timing requirements for PCLK†‡ (see Figure 47)

NO.			−600 −720 MIN	−600 −720 MAX	UNIT
1	$t_{c(PCLK)}$	Cycle time, PCLK	30 (or 8P§)		ns
2	$t_{w(PCLKH)}$	Pulse duration, PCLK high	11		ns
3	$t_{w(PCLKL)}$	Pulse duration, PCLK low	11		ns
4	$t_{sr(PCLK)}$	Δv/Δt slew rate, PCLK	1	4	V/ns

† For 3.3-V operation, the reference points for the rise and fall transitions are measured at V_{ILP} MAX and V_{IHP} MIN.
‡ P = 1/CPU clock frequency in ns. For example, when running parts at 720 MHz, use P = 1.39 ns.
§ Select the parameter value of 30 ns or 8P, whichever is greater.

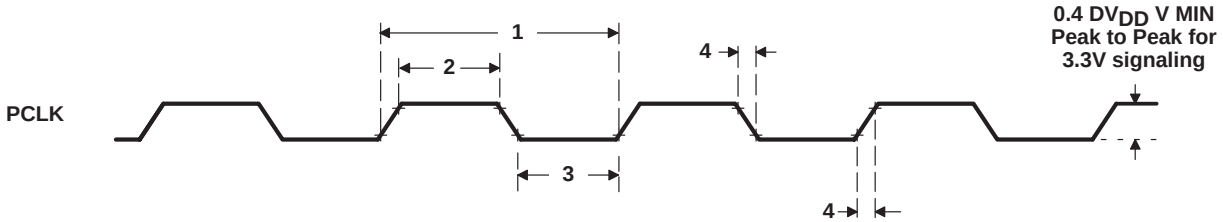

Figure 47. PCLK Timing

timing requirements for PCI reset (see Figure 48)

NO.			−600 −720 MIN	−600 −720 MAX	UNIT
1	$t_{w(PRST)}$	Pulse duration, $\overline{PRST}$	1		ms
2	$t_{su(PCLKA-PRSTH)}$	Setup time, PCLK active before $\overline{PRST}$ high	100		µs

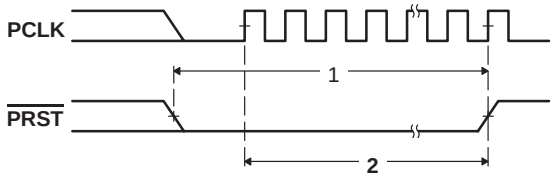

Figure 48. PCI Reset ($\overline{PRST}$) Timing

PERIPHERAL COMPONENT INTERCONNECT (PCI) TIMING (CONTINUED)

timing requirements for PCI inputs (see Figure 49)

NO.			−600 −720		UNIT
			MIN	MAX	
5	$t_{su(IV-PCLKH)}$	Setup time, input valid before PCLK high	7		ns
6	$t_{h(IV-PCLKH)}$	Hold time, input valid after PCLK high	0		ns

switching characteristics over recommended operating conditions for PCI outputs (see Figure 49)

NO.	PARAMETER		−600 −720		UNIT
			MIN	MAX	
1	$t_{d(PCLKH-OV)}$	Delay time, PCLK high to output valid		11	ns
2	$t_{d(PCLKH-OIV)}$	Delay time, PCLK high to output invalid	2		ns
3	$t_{d(PCLKH-OLZ)}$	Delay time, PCLK high to output low impedance	2		ns
4	$t_{d(PCLKH-OHZ)}$	Delay time, PCLK high to output high impedance		28	ns

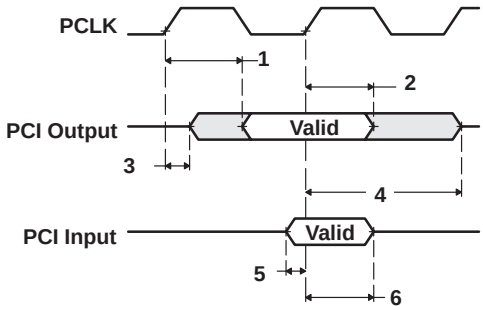

Figure 49. PCI Input/Output Timing

PERIPHERAL COMPONENT INTERCONNECT (PCI) TIMING (CONTINUED)

timing requirements for serial EEPROM interface (see Figure 50)

NO.			−600 −720		UNIT
			MIN	MAX	
8	$t_{su(DIV-CLKH)}$	Setup time, XSP_DI valid before XSP_CLK high	50		ns
9	$t_{h(CLKH-DIV)}$	Hold time, XSP_DI valid after XSP_CLK high	0		ns

switching characteristics over recommended operating conditions for serial EEPROM interface† (see Figure 50)

NO.	PARAMETER		−600 −720			UNIT
			MIN	TYP	MAX	
1	$t_{w(CSL)}$	Pulse duration, XSP_CS low		4092P		ns
2	$t_{d(CLKL-CSL)}$	Delay time, XSP_CLK low to XSP_CS low		0		ns
3	$t_{d(CSH-CLKH)}$	Delay time, XSP_CS high to XSP_CLK high		2046P		ns
4	$t_{w(CLKH)}$	Pulse duration, XSP_CLK high		2046P		ns
5	$t_{w(CLKL)}$	Pulse duration, XSP_CLK low		2046P		ns
6	$t_{osu(DOV-CLKH)}$	Output setup time, XSP_DO valid before XSP_CLK high		2046P		ns
7	$t_{oh(CLKH-DOV)}$	Output hold time, XSP_DO valid after XSP_CLK high		2046P		ns

† P = 1/CPU clock frequency in ns. For example, when running parts at 720 MHz, use P = 1.39 ns.

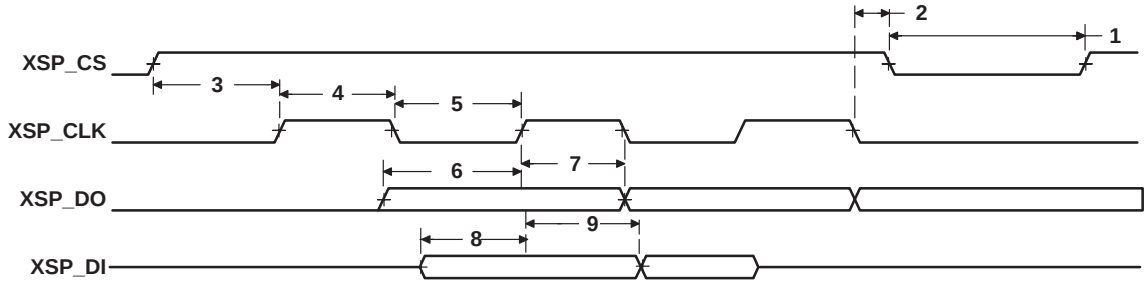

Figure 50. PCI Serial EEPROM Interface Timing

MULTICHANNEL BUFFERED SERIAL PORT (McBSP) TIMING

timing requirements for McBSP† (see Figure 51)

NO.				−600 −720 MIN	−600 −720 MAX	UNIT
2	$t_{c(CKRX)}$	Cycle time, CLKR/X	CLKR/X ext	4P or 6.67‡§¶		ns
3	$t_{w(CKRX)}$	Pulse duration, CLKR/X high or CLKR/X low	CLKR/X ext	$0.5t_{c(CKRX)} - 1$#		ns
5	$t_{su(FRH-CKRL)}$	Setup time, external FSR high before CLKR low	CLKR int	9		ns
			CLKR ext	1.3		
6	$t_{h(CKRL-FRH)}$	Hold time, external FSR high after CLKR low	CLKR int	6		ns
			CLKR ext	3		
7	$t_{su(DRV-CKRL)}$	Setup time, DR valid before CLKR low	CLKR int	8		ns
			CLKR ext	0.9		
8	$t_{h(CKRL-DRV)}$	Hold time, DR valid after CLKR low	CLKR int	3		ns
			CLKR ext	3.1		
10	$t_{su(FXH-CKXL)}$	Setup time, external FSX high before CLKX low	CLKX int	9		ns
			CLKX ext	1.3		
11	$t_{h(CKXL-FXH)}$	Hold time, external FSX high after CLKX low	CLKX int	6		ns
			CLKX ext	3		

† CLKRP = CLKXP = FSRP = FSXP = 0. If polarity of any of the signals is inverted, then the timing references of that signal are also inverted.
‡ Minimum CLKR/X cycle times *must* be met, even when CLKR/X is generated by an internal clock source. Minimum CLKR/X cycle times are based on internal logic speed; the maximum usable speed may be lower due to EDMA limitations and AC timing requirements.
§ P = 1/CPU clock frequency in ns. For example, when running parts at 720 MHz, use P = 1.39 ns.
¶ Use whichever value is greater.
# This parameter applies to the maximum McBSP frequency. Operate serial clocks (CLKR/X) in the reasonable range of 40/60 duty cycle.

MULTICHANNEL BUFFERED SERIAL PORT (McBSP) TIMING (CONTINUED)

switching characteristics over recommended operating conditions for McBSP†‡ (see Figure 51)

NO.	PARAMETER			−600 −720		UNIT
				MIN	MAX	UNIT
1	$t_{d(CKSH-CKRXH)}$	Delay time, CLKS high to CLKR/X high for internal CLKR/X generated from CLKS input		1.4	10	ns
2	$t_{c(CKRX)}$	Cycle time, CLKR/X	CLKR/X int	4P or 6.67§¶#		ns
3	$t_{w(CKRX)}$	Pulse duration, CLKR/X high or CLKR/X low	CLKR/X int	C − 1‖	C + 1‖	ns
4	$t_{d(CKRH-FRV)}$	Delay time, CLKR high to internal FSR valid	CLKR int	−2.1	3	ns
9	$t_{d(CKXH-FXV)}$	Delay time, CLKX high to internal FSX valid	CLKX int	−1.7	3	ns
			CLKX ext	1.7	9	ns
12	$t_{dis(CKXH-DXHZ)}$	Disable time, DX high impedance following last data bit from CLKX high	CLKX int	−3.9	4	ns
			CLKX ext	2	9	ns
13	$t_{d(CKXH-DXV)}$	Delay time, CLKX high to DX valid	CLKX int	−3.9 + D1☆	4 + D2☆	ns
			CLKX ext	2.0 + D1☆	9 + D2☆	ns
14	$t_{d(FXH-DXV)}$	Delay time, FSX high to DX valid ONLY applies when in data delay 0 (XDATDLY = 00b) mode	FSX int	−2.3 + D1□	5.6 + D2□	ns
			FSX ext	1.9 + D1□	9 + D2□	ns

† CLKRP = CLKXP = FSRP = FSXP = 0. If polarity of any of the signals is inverted, then the timing references of that signal are also inverted.
‡ Minimum delay times also represent minimum output hold times.
§ Minimum CLKR/X cycle times *must* be met, even when CLKR/X is generated by an internal clock source. Minimum CLKR/X cycle times are based on internal logic speed; the maximum usable speed may be lower due to EDMA limitations and AC timing requirements.
¶ P = 1/CPU clock frequency in ns. For example, when running parts at 720 MHz, use P = 1.39 ns.
# Use whichever value is greater.
‖ C = H or L
S = sample rate generator input clock = 4P if CLKSM = 1 (P = 1/CPU clock frequency)
= sample rate generator input clock = P_clks if CLKSM = 0 (P_clks = CLKS period)
H = CLKX high pulse width = (CLKGDV/2 + 1) * S if CLKGDV is even
= (CLKGDV + 1)/2 * S if CLKGDV is odd or zero
L = CLKX low pulse width = (CLKGDV/2) * S if CLKGDV is even
= (CLKGDV + 1)/2 * S if CLKGDV is odd or zero
CLKGDV should be set appropriately to ensure the McBSP bit rate does not exceed the maximum limit (see ¶ footnote above).
☆Extra delay from CLKX high to DX valid applies *only* to the first data bit of a device, if and only if DXENA = 1 in SPCR.
if DXENA = 0, then D1 = D2 = 0
if DXENA = 1, then D1 = 4P, D2 = 8P
□Extra delay from FSX high to DX valid **applies *only* to the first data bit of a device**, if and only if DXENA = 1 in SPCR.
if DXENA = 0, then D1 = D2 = 0
if DXENA = 1, then D1 = 4P, D2 = 8P

MULTICHANNEL BUFFERED SERIAL PORT (McBSP) TIMING (CONTINUED)

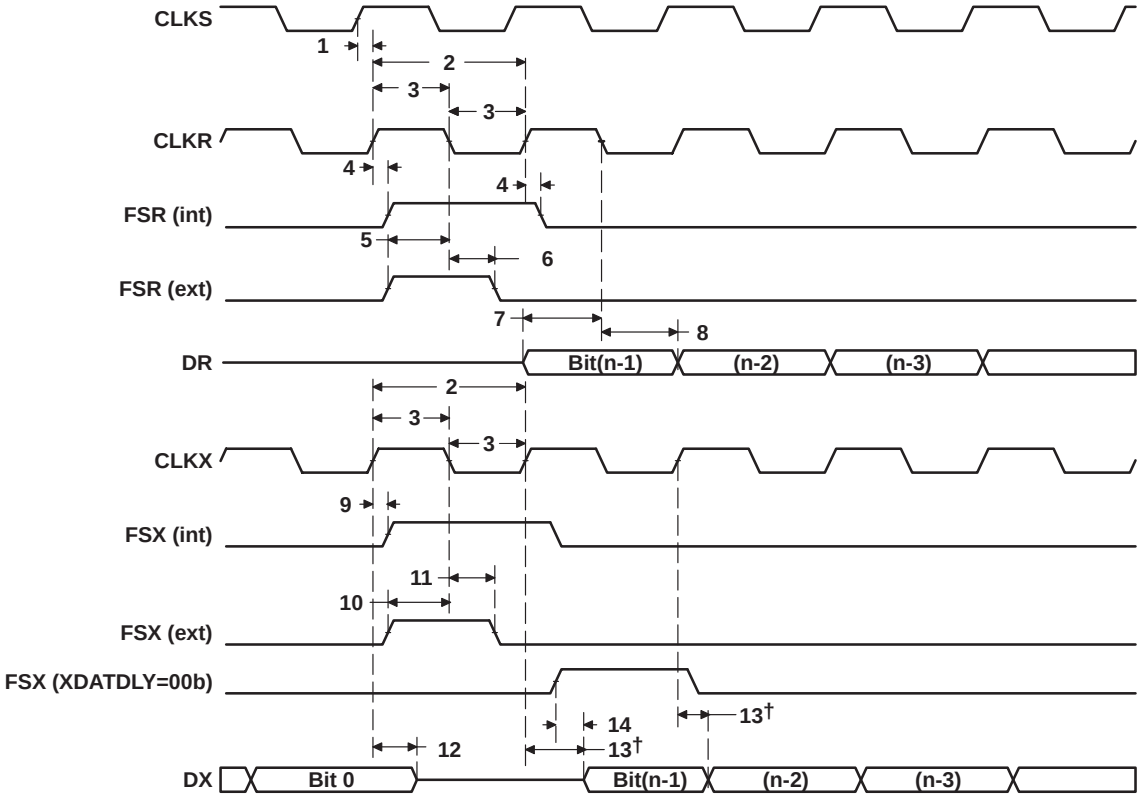

† Parameter No. 13 applies to the first data bit *only* when XDATDLY ≠ 0

Figure 51. McBSP Timing

MULTICHANNEL BUFFERED SERIAL PORT (McBSP) TIMING (CONTINUED)

timing requirements for FSR when GSYNC = 1 (see Figure 52)

NO.		−600 −720		UNIT
		MIN	MAX	
1	$t_{su(FRH-CKSH)}$ Setup time, FSR high before CLKS high	4		ns
2	$t_{h(CKSH-FRH)}$ Hold time, FSR high after CLKS high	4		ns

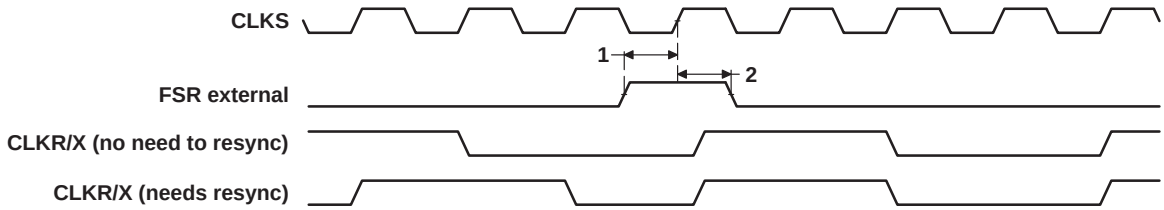

Figure 52. FSR Timing When GSYNC = 1

MULTICHANNEL BUFFERED SERIAL PORT (McBSP) TIMING (CONTINUED)

timing requirements for McBSP as SPI Master or Slave: CLKSTP = 10b, CLKXP = 0†‡ (see Figure 53)

NO.			−600 −720				UNIT
			MASTER		SLAVE		
			MIN	MAX	MIN	MAX	
4	$t_{su(DRV-CKXL)}$	Setup time, DR valid before CLKX low	12		2 − 12P		ns
5	$t_{h(CKXL-DRV)}$	Hold time, DR valid after CLKX low	4		5 + 24P		ns

† P = 1/CPU clock frequency in ns. For example, when running parts at 720 MHz, use P = 1.39 ns.
‡ For all SPI Slave modes, CLKG is programmed as 1/4 of the CPU clock by setting CLKSM = CLKGDV = 1.

switching characteristics over recommended operating conditions for McBSP as SPI Master or Slave: CLKSTP = 10b, CLKXP = 0†‡ (see Figure 53)

NO.	PARAMETER		−600 −720				UNIT
			MASTER§		SLAVE		
			MIN	MAX	MIN	MAX	
1	$t_{h(CKXL-FXL)}$	Hold time, FSX low after CLKX low¶	T − 2	T + 3			ns
2	$t_{d(FXL-CKXH)}$	Delay time, FSX low to CLKX high#	L − 2	L + 3			ns
3	$t_{d(CKXH-DXV)}$	Delay time, CLKX high to DX valid	−2	4	12P + 2.8	20P + 17	ns
6	$t_{dis(CKXL-DXHZ)}$	Disable time, DX high impedance following last data bit from CLKX low	L − 2	L + 3			ns
7	$t_{dis(FXH-DXHZ)}$	Disable time, DX high impedance following last data bit from FSX high			4P + 3	12P + 17	ns
8	$t_{d(FXL-DXV)}$	Delay time, FSX low to DX valid			8P + 1.8	16P + 17	ns

† P = 1/CPU clock frequency in ns. For example, when running parts at 720 MHz, use P = 1.39 ns.
‡ For all SPI Slave modes, CLKG is programmed as 1/4 of the CPU clock by setting CLKSM = CLKGDV = 1.
§ S = Sample rate generator input clock = 4P if CLKSM = 1 (P = 1/CPU clock frequency)
= Sample rate generator input clock = P_clks if CLKSM = 0 (P_clks = CLKS period)
T = CLKX period = (1 + CLKGDV) * S
H = CLKX high pulse width = (CLKGDV/2 + 1) * S if CLKGDV is even
= (CLKGDV + 1)/2 * S if CLKGDV is odd or zero
L = CLKX low pulse width = (CLKGDV/2) * S if CLKGDV is even
= (CLKGDV + 1)/2 * S if CLKGDV is odd or zero
¶ FSRP = FSXP = 1. As a SPI Master, FSX is inverted to provide active-low slave-enable output. As a Slave, the active-low signal input on FSX and FSR is inverted before being used internally.
CLKXM = FSXM = 1, CLKRM = FSRM = 0 for Master McBSP
CLKXM = CLKRM = FSXM = FSRM = 0 for Slave McBSP
# FSX should be low before the rising edge of clock to enable Slave devices and then begin a SPI transfer at the rising edge of the Master clock (CLKX).

MULTICHANNEL BUFFERED SERIAL PORT (McBSP) TIMING (CONTINUED)

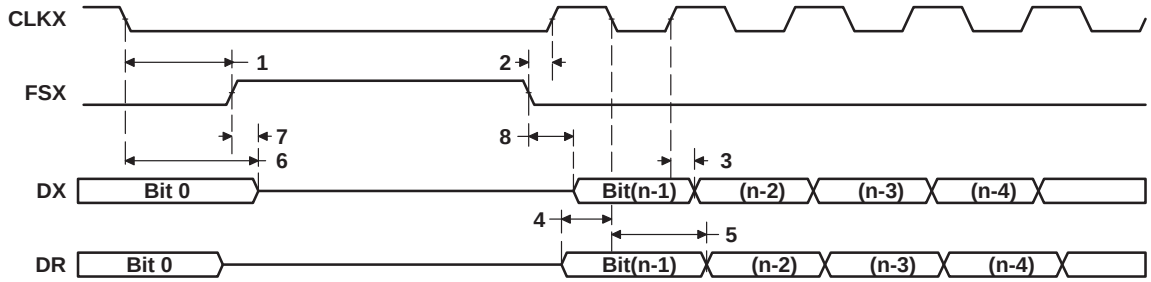

Figure 53. McBSP Timing as SPI Master or Slave: CLKSTP = 10b, CLKXP = 0

MULTICHANNEL BUFFERED SERIAL PORT (McBSP) TIMING (CONTINUED)

timing requirements for McBSP as SPI Master or Slave: CLKSTP = 11b, CLKXP = 0†‡ (see Figure 54)

NO.			−600 −720				UNIT
			MASTER		SLAVE		
			MIN	MAX	MIN	MAX	
4	$t_{su(DRV-CKXH)}$	Setup time, DR valid before CLKX high	12		2 − 12P		ns
5	$t_{h(CKXH-DRV)}$	Hold time, DR valid after CLKX high	4		5 + 24P		ns

† P = 1/CPU clock frequency in ns. For example, when running parts at 720 MHz, use P = 1.39 ns.
‡ For all SPI Slave modes, CLKG is programmed as 1/4 of the CPU clock by setting CLKSM = CLKGDV = 1.

switching characteristics over recommended operating conditions for McBSP as SPI Master or Slave: CLKSTP = 11b, CLKXP = 0†‡ (see Figure 54)

NO.	PARAMETER		−600 −720				UNIT
			MASTER§		SLAVE		
			MIN	MAX	MIN	MAX	
1	$t_{h(CKXL-FXL)}$	Hold time, FSX low after CLKX low¶	L − 2	L + 3			ns
2	$t_{d(FXL-CKXH)}$	Delay time, FSX low to CLKX high#	T − 2	T + 3			ns
3	$t_{d(CKXL-DXV)}$	Delay time, CLKX low to DX valid	−2	4	12P + 2.8	20P + 17	ns
6	$t_{dis(CKXL-DXHZ)}$	Disable time, DX high impedance following last data bit from CLKX low	−2	4	12P + 3	20P + 17	ns
7	$t_{d(FXL-DXV)}$	Delay time, FSX low to DX valid	H − 2	H + 4	8P + 2	16P + 17	ns

† P = 1/CPU clock frequency in ns. For example, when running parts at 720 MHz, use P = 1.39 ns.
‡ For all SPI Slave modes, CLKG is programmed as 1/4 of the CPU clock by setting CLKSM = CLKGDV = 1.
§ S = Sample rate generator input clock = 4P if CLKSM = 1 (P = 1/CPU clock frequency)
= Sample rate generator input clock = P_clks if CLKSM = 0 (P_clks = CLKS period)
T = CLKX period = (1 + CLKGDV) * S
H = CLKX high pulse width = (CLKGDV/2 + 1) * S if CLKGDV is even
= (CLKGDV + 1)/2 * S if CLKGDV is odd or zero
L = CLKX low pulse width = (CLKGDV/2) * S if CLKGDV is even
= (CLKGDV + 1)/2 * S if CLKGDV is odd or zero
¶ FSRP = FSXP = 1. As a SPI Master, FSX is inverted to provide active-low slave-enable output. As a Slave, the active-low signal input on FSX and FSR is inverted before being used internally.
CLKXM = FSXM = 1, CLKRM = FSRM = 0 for Master McBSP
CLKXM = CLKRM = FSXM = FSRM = 0 for Slave McBSP
# FSX should be low before the rising edge of clock to enable Slave devices and then begin a SPI transfer at the rising edge of the Master clock (CLKX).

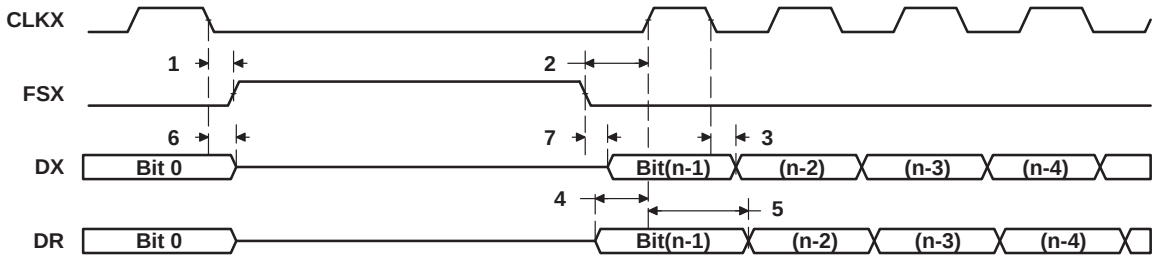

Figure 54. McBSP Timing as SPI Master or Slave: CLKSTP = 11b, CLKXP = 0

MULTICHANNEL BUFFERED SERIAL PORT (McBSP) TIMING (CONTINUED)

timing requirements for McBSP as SPI Master or Slave: CLKSTP = 10b, CLKXP = 1†‡ (see Figure 55)

NO.			−600 −720				UNIT
			MASTER		SLAVE		
			MIN	MAX	MIN	MAX	
4	$t_{su(DRV-CKXH)}$	Setup time, DR valid before CLKX high	12		2 − 12P		ns
5	$t_{h(CKXH-DRV)}$	Hold time, DR valid after CLKX high	4		5 + 24P		ns

† P = 1/CPU clock frequency in ns. For example, when running parts at 720 MHz, use P = 1.39 ns.
‡ For all SPI Slave modes, CLKG is programmed as 1/4 of the CPU clock by setting CLKSM = CLKGDV = 1.

switching characteristics over recommended operating conditions for McBSP as SPI Master or Slave: CLKSTP = 10b, CLKXP = 1†‡ (see Figure 55)

NO.	PARAMETER		−600 −720				UNIT
			MASTER§		SLAVE		
			MIN	MAX	MIN	MAX	
1	$t_{h(CKXH-FXL)}$	Hold time, FSX low after CLKX high¶	T − 2	T + 3			ns
2	$t_{d(FXL-CKXL)}$	Delay time, FSX low to CLKX low#	H − 2	H + 3			ns
3	$t_{d(CKXL-DXV)}$	Delay time, CLKX low to DX valid	−2	4	12P + 2.8	20P + 17	ns
6	$t_{dis(CKXH-DXHZ)}$	Disable time, DX high impedance following last data bit from CLKX high	H − 2	H + 3			ns
7	$t_{dis(FXH-DXHZ)}$	Disable time, DX high impedance following last data bit from FSX high			4P + 3	12P + 17	ns
8	$t_{d(FXL-DXV)}$	Delay time, FSX low to DX valid			8P + 2	16P + 17	ns

† P = 1/CPU clock frequency in ns. For example, when running parts at 720 MHz, use P = 1.39 ns.
‡ For all SPI Slave modes, CLKG is programmed as 1/4 of the CPU clock by setting CLKSM = CLKGDV = 1.
§ S = Sample rate generator input clock = 4P if CLKSM = 1 (P = 1/CPU clock frequency)
= Sample rate generator input clock = P_clks if CLKSM = 0 (P_clks = CLKS period)
T = CLKX period = (1 + CLKGDV) * S
H = CLKX high pulse width = (CLKGDV/2 + 1) * S if CLKGDV is even
= (CLKGDV + 1)/2 * S if CLKGDV is odd or zero
L = CLKX low pulse width = (CLKGDV/2) * S if CLKGDV is even
= (CLKGDV + 1)/2 * S if CLKGDV is odd or zero
¶ FSRP = FSXP = 1. As a SPI Master, FSX is inverted to provide active-low slave-enable output. As a Slave, the active-low signal input on FSX and FSR is inverted before being used internally.
CLKXM = FSXM = 1, CLKRM = FSRM = 0 for Master McBSP
CLKXM = CLKRM = FSXM = FSRM = 0 for Slave McBSP
# FSX should be low before the rising edge of clock to enable Slave devices and then begin a SPI transfer at the rising edge of the Master clock (CLKX).

MULTICHANNEL BUFFERED SERIAL PORT (McBSP) TIMING (CONTINUED)

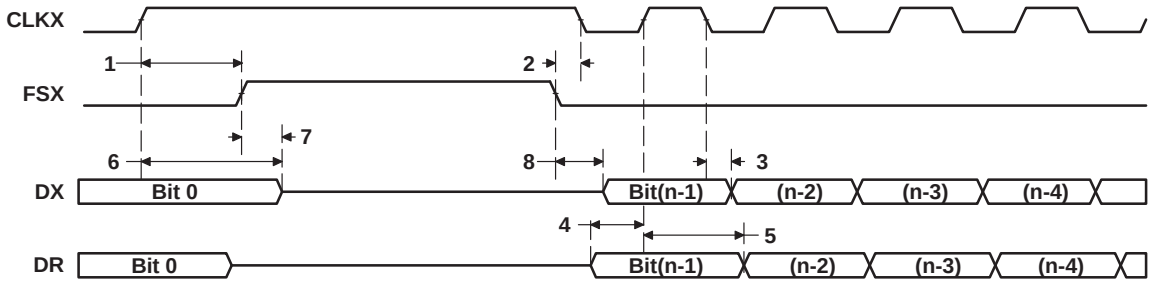

Figure 55. McBSP Timing as SPI Master or Slave: CLKSTP = 10b, CLKXP = 1

MULTICHANNEL BUFFERED SERIAL PORT (McBSP) TIMING (CONTINUED)

timing requirements for McBSP as SPI Master or Slave: CLKSTP = 11b, CLKXP = 1†‡ (see Figure 56)

NO.			−600 −720				UNIT
			MASTER		SLAVE		
			MIN	MAX	MIN	MAX	
4	$t_{su(DRV-CKXH)}$	Setup time, DR valid before CLKX high	12		2 − 12P		ns
5	$t_{h(CKXH-DRV)}$	Hold time, DR valid after CLKX high	4		5 + 24P		ns

† P = 1/CPU clock frequency in ns. For example, when running parts at 720 MHz, use P = 1.39 ns.
‡ For all SPI Slave modes, CLKG is programmed as 1/4 of the CPU clock by setting CLKSM = CLKGDV = 1.

switching characteristics over recommended operating conditions for McBSP as SPI Master or Slave: CLKSTP = 11b, CLKXP = 1†‡ (see Figure 56)

NO.	PARAMETER		−600 −720				UNIT
			MASTER§		SLAVE		
			MIN	MAX	MIN	MAX	
1	$t_{h(CKXH-FXL)}$	Hold time, FSX low after CLKX high¶	H − 2	H + 3			ns
2	$t_{d(FXL-CKXL)}$	Delay time, FSX low to CLKX low#	T − 2	T + 1			ns
3	$t_{d(CKXH-DXV)}$	Delay time, CLKX high to DX valid	−2	4	12P + 2.8	20P + 17	ns
6	$t_{dis(CKXH-DXHZ)}$	Disable time, DX high impedance following last data bit from CLKX high	−2	4	12P + 3	20P + 17	ns
7	$t_{d(FXL-DXV)}$	Delay time, FSX low to DX valid	L − 2	L + 4	8P + 2	16P + 17	ns

† P = 1/CPU clock frequency in ns. For example, when running parts at 720 MHz, use P = 1.39 ns.
‡ For all SPI Slave modes, CLKG is programmed as 1/4 of the CPU clock by setting CLKSM = CLKGDV = 1.
§ S = Sample rate generator input clock = 4P if CLKSM = 1 (P = 1/CPU clock frequency)
= Sample rate generator input clock = P_clks if CLKSM = 0 (P_clks = CLKS period)
T = CLKX period = (1 + CLKGDV) * S
H = CLKX high pulse width = (CLKGDV/2 + 1) * S if CLKGDV is even
= (CLKGDV + 1)/2 * S if CLKGDV is odd or zero
L = CLKX low pulse width = (CLKGDV/2) * S if CLKGDV is even
= (CLKGDV + 1)/2 * S if CLKGDV is odd or zero
¶ FSRP = FSXP = 1. As a SPI Master, FSX is inverted to provide active-low slave-enable output. As a Slave, the active-low signal input on FSX and FSR is inverted before being used internally.
CLKXM = FSXM = 1, CLKRM = FSRM = 0 for Master McBSP
CLKXM = CLKRM = FSXM = FSRM = 0 for Slave McBSP
# FSX should be low before the rising edge of clock to enable Slave devices and then begin a SPI transfer at the rising edge of the Master clock (CLKX).

MULTICHANNEL BUFFERED SERIAL PORT (McBSP) TIMING (CONTINUED)

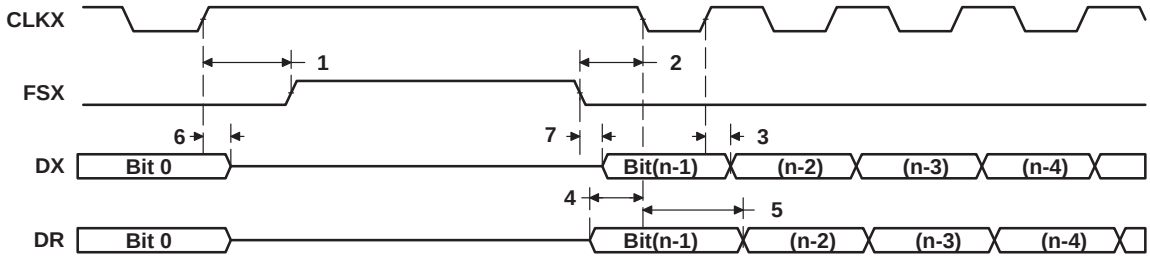

Figure 56. McBSP Timing as SPI Master or Slave: CLKSTP = 11b, CLKXP = 1

UTOPIA SLAVE TIMING

timing requirements for UXCLK† (see Figure 57)

NO.			−600 −720		UNIT
			MIN	MAX	
1	$t_{c(UXCK)}$	Cycle time, UXCLK	20		ns
2	$t_{w(UXCKH)}$	Pulse duration, UXCLK high	$0.4t_{c(UXCK)}$	$0.6t_{c(UXCK)}$	ns
3	$t_{w(UXCKL)}$	Pulse duration, UXCLK low	$0.4t_{c(UXCK)}$	$0.6t_{c(UXCK)}$	ns
4	$t_{t(UXCK)}$	Transition time, UXCLK		2	ns

† The reference points for the rise and fall transitions are measured at V_{IL} MAX and V_{IH} MIN.

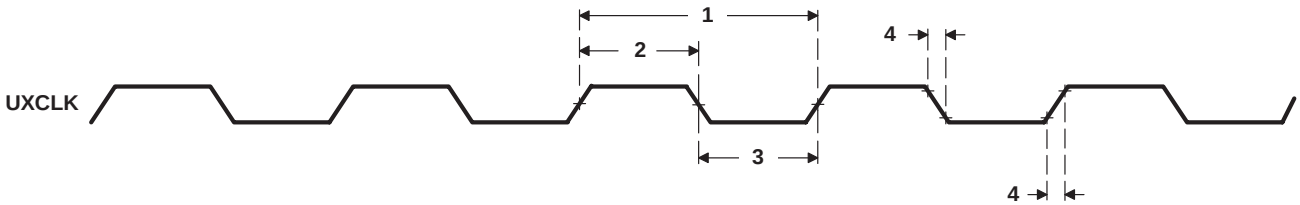

Figure 57. UXCLK Timing

timing requirements for URCLK† (see Figure 58)

NO.			−600 −720		UNIT
			MIN	MAX	
1	$t_{c(URCK)}$	Cycle time, URCLK	20		ns
2	$t_{w(URCKH)}$	Pulse duration, URCLK high	$0.4t_{c(URCK)}$	$0.6t_{c(URCK)}$	ns
3	$t_{w(URCKL)}$	Pulse duration, URCLK low	$0.4t_{c(URCK)}$	$0.6t_{c(URCK)}$	ns
4	$t_{t(URCK)}$	Transition time, URCLK		2	ns

† The reference points for the rise and fall transitions are measured at V_{IL} MAX and V_{IH} MIN.

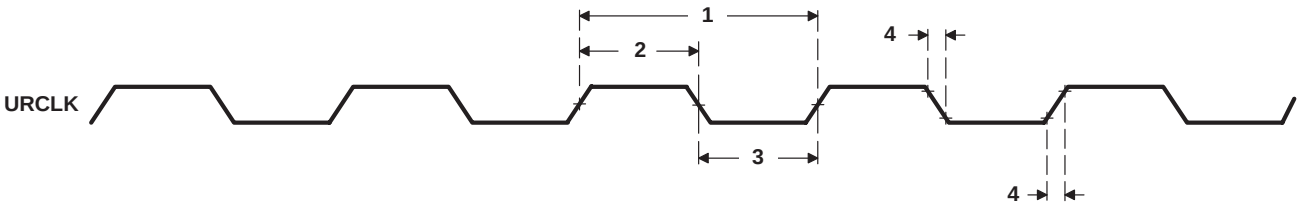

Figure 58. URCLK Timing

UTOPIA SLAVE TIMING (CONTINUED)

timing requirements for UTOPIA Slave transmit (see Figure 59)

NO.			−600 −720		UNIT
			MIN	MAX	
2	$t_{su(UXAV-UXCH)}$	Setup time, UXADDR valid before UXCLK high	4		ns
3	$t_{h(UXCH-UXAV)}$	Hold time, UXADDR valid after UXCLK high	1		ns
8	$t_{su(UXENBL-UXCH)}$	Setup time, $\overline{\text{UXENB}}$ low before UXCLK high	4		ns
9	$t_{h(UXCH-UXENBL)}$	Hold time, $\overline{\text{UXENB}}$ low after UXCLK high	1		ns

switching characteristics over recommended operating conditions for UTOPIA Slave transmit (see Figure 59)

NO.	PARAMETER		−600 −720		UNIT
			MIN	MAX	
1	$t_{d(UXCH-UXDV)}$	Delay time, UXCLK high to UXDATA valid	3	12	ns
4	$t_{d(UXCH-UXCLAV)}$	Delay time, UXCLK high to UXCLAV driven active value	3	12	ns
5	$t_{d(UXCH-UXCLAVL)}$	Delay time, UXCLK high to UXCLAV driven inactive low	3	12	ns
6	$t_{d(UXCH-UXCLAVHZ)}$	Delay time, UXCLK high to UXCLAV going Hi-Z	9	18.5	ns
7	$t_{w(UXCLAVL-UXCLAVHZ)}$	Pulse duration (low), UXCLAV low to UXCLAV Hi-Z	3		ns
10	$t_{d(UXCH-UXSV)}$	Delay time, UXCLK high to UXSOC valid	3	12	ns

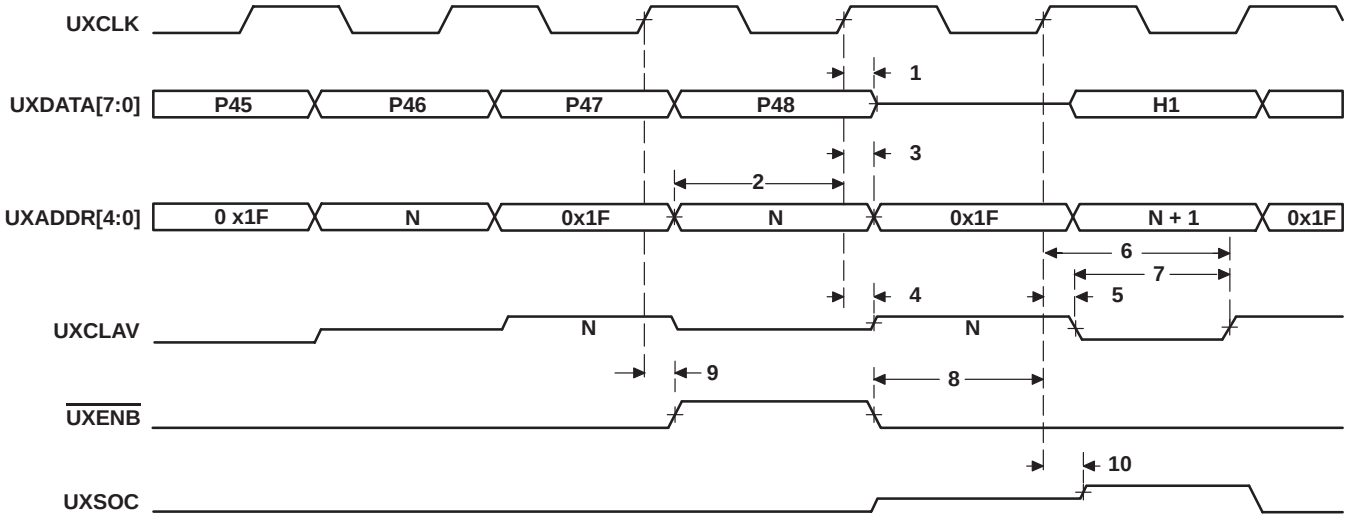

† The UTOPIA Slave module has signals that are middle-level signals indicating a high-impedance state (i.e., the UXCLAV and UXSOC signals).

Figure 59. UTOPIA Slave Transmit Timing†

UTOPIA SLAVE TIMING (CONTINUED)

timing requirements for UTOPIA Slave receive (see Figure 60)

NO.			−600 −720		UNIT
			MIN	MAX	
1	$t_{su(URDV-URCH)}$	Setup time, URDATA valid before URCLK high	4		ns
2	$t_{h(URCH-URDV)}$	Hold time, URDATA valid after URCLK high	1		ns
3	$t_{su(URAV-URCH)}$	Setup time, URADDR valid before URCLK high	4		ns
4	$t_{h(URCH-URAV)}$	Hold time, URADDR valid after URCLK high	1		ns
9	$t_{su(URENBL-URCH)}$	Setup time, $\overline{\text{URENB}}$ low before URCLK high	4		ns
10	$t_{h(URCH-URENBL)}$	Hold time, $\overline{\text{URENB}}$ low after URCLK high	1		ns
11	$t_{su(URSH-URCH)}$	Setup time, URSOC high before URCLK high	4		ns
12	$t_{h(URCH-URSH)}$	Hold time, URSOC high after URCLK high	1		ns

switching characteristics over recommended operating conditions for UTOPIA Slave receive (see Figure 60)

NO.	PARAMETER		−600 −720		UNIT
			MIN	MAX	
5	$t_{d(URCH-URCLAV)}$	Delay time, URCLK high to URCLAV driven active value	3	12	ns
6	$t_{d(URCH-URCLAVL)}$	Delay time, URCLK high to URCLAV driven inactive low	3	12	ns
7	$t_{d(URCH-URCLAVHZ)}$	Delay time, URCLK high to URCLAV going Hi-Z	9	18.5	ns
8	$t_{w(URCLAVL-URCLAVHZ)}$	Pulse duration (low), URCLAV low to URCLAV Hi-Z	3		ns

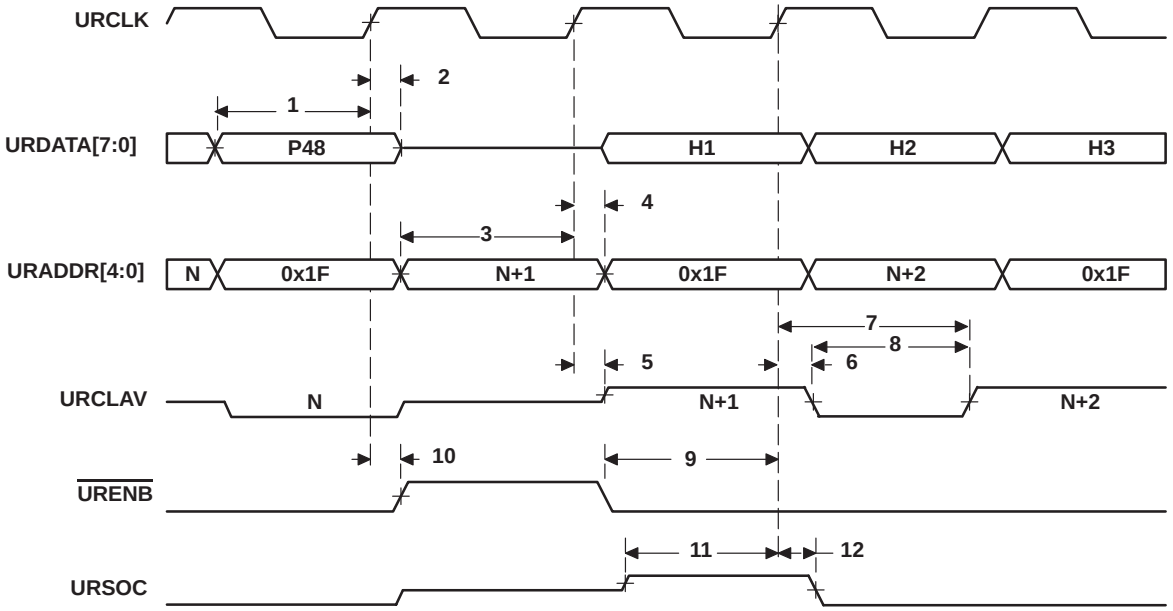

† The UTOPIA Slave module has signals that are middle-level signals indicating a high-impedance state (i.e., the URCLAV and URSOC signals).

Figure 60. UTOPIA Slave Receive Timing†

TIMER TIMING

timing requirements for timer inputs† (see Figure 61)

NO.			−600 −720		UNIT
			MIN	MAX	
1	$t_{w(TINPH)}$	Pulse duration, TINP high	8P		ns
2	$t_{w(TINPL)}$	Pulse duration, TINP low	8P		ns

† P = 1/CPU clock frequency in ns. For example, when running parts at 720 MHz, use P = 1.39 ns.

switching characteristics over recommended operating conditions for timer outputs† (see Figure 61)

NO.	PARAMETER		−600 −720		UNIT
			MIN	MAX	
3	$t_{w(TOUTH)}$	Pulse duration, TOUT high	8P−3		ns
4	$t_{w(TOUTL)}$	Pulse duration, TOUT low	8P−3		ns

† P = 1/CPU clock frequency in ns. For example, when running parts at 720 MHz, use P = 1.39 ns.

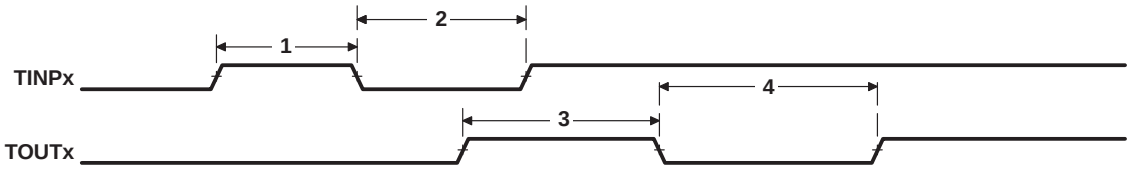

Figure 61. Timer Timing

GENERAL-PURPOSE INPUT/OUTPUT (GPIO) PORT TIMING

timing requirements for GPIO inputs†‡ (see Figure 62)

NO.			−600 −720		UNIT
			MIN	MAX	
1	$t_{w(GPIH)}$	Pulse duration, GPIx high	8P		ns
2	$t_{w(GPIL)}$	Pulse duration, GPIx low	8P		ns

† P = 1/CPU clock frequency in ns. For example, when running parts at 720 MHz, use P = 1.39 ns.
‡ The pulse width given is sufficient to generate a CPU interrupt or an EDMA event. However, if a user wants to have the DSP recognize the GPIx changes through software polling of the GPIO register, the GPIx duration must be extended to at least 12P to allow the DSP enough time to access the GPIO register through the CFGBUS.

switching characteristics over recommended operating conditions for GPIO outputs† (see Figure 62)

NO.	PARAMETER		−600 −720		UNIT
			MIN	MAX	
3	$t_{w(GPOH)}$	Pulse duration, GPOx high	24P − 8§		ns
4	$t_{w(GPOL)}$	Pulse duration, GPOx low	24P − 8§		ns

† P = 1/CPU clock frequency in ns. For example, when running parts at 720 MHz, use P = 1.39 ns.
§ This parameter value should not be used as a maximum performance specification. Actual performance of back-to-back accesses of the GPIO is dependent upon internal bus activity.

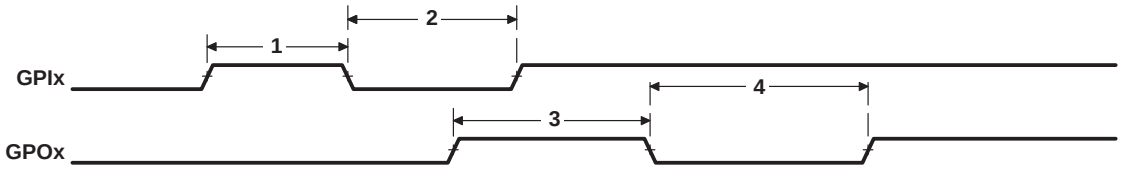

Figure 62. GPIO Port Timing

JTAG TEST-PORT TIMING

timing requirements for JTAG test port (see Figure 63)

NO.			−600 −720		UNIT
			MIN	MAX	
1	$t_{c(TCK)}$	Cycle time, TCK	35		ns
3	$t_{su(TDIV-TCKH)}$	Setup time, TDI/TMS/$\overline{TRST}$ valid before TCK high	10		ns
4	$t_{h(TCKH-TDIV)}$	Hold time, TDI/TMS/$\overline{TRST}$ valid after TCK high	9		ns

switching characteristics over recommended operating conditions for JTAG test port (see Figure 63)

NO.	PARAMETER		−600 −720		UNIT
			MIN	MAX	
2	$t_{d(TCKL-TDOV)}$	Delay time, TCK low to TDO valid	0	18	ns

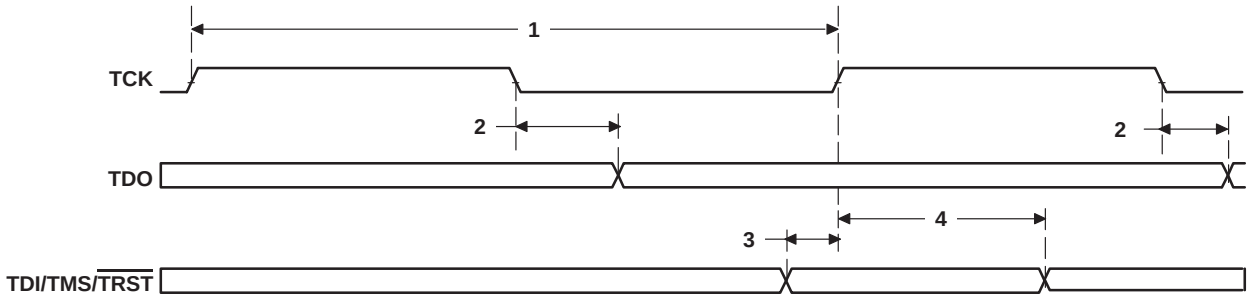

Figure 63. JTAG Test-Port Timing

MECHANICAL DATA

The following tables show the thermal resistance characteristics for the GLZ, ZLZ and CLZ mechanical packages.

thermal resistance characteristics (S-PBGA package) [GLZ]

NO.		°C/W†	Air Flow (m/s‡)
1	$R\Theta_{JC}$ Junction-to-case	3.11	N/A
2	$R\Theta_{JB}$ Junction-to-board	9.95	N/A
3	$R\Theta_{JA}$ Junction-to-free air	19.6	0.00
4	$R\Theta_{JA}$ Junction-to-free air	17.3	0.5
5	$R\Theta_{JA}$ Junction-to-free air	15.6	1.0
6	$R\Theta_{JA}$ Junction-to-free air	17.7	2.00
7	Psi_{JT} Junction-to-package top	0.83	N/A
8	Psi_{JB} Junction-to-board	7.88	N/A

† Numbers are based on simulations.
‡ m/s = meters per second

thermal resistance characteristics (S-PBGA package) [ZLZ]

NO		°C/W†	Air Flow (m/s‡)
1	$R\Theta_{JC}$ Junction-to-case	3.11	N/A
2	$R\Theta_{JB}$ Junction-to-board	9.95	N/A
3	$R\Theta_{JA}$ Junction-to-free air	19.6	0.00
4	$R\Theta_{JA}$ Junction-to-free air	17.3	0.5
5	$R\Theta_{JA}$ Junction-to-free air	15.6	1.0
6	$R\Theta_{JA}$ Junction-to-free air	14.7	2.00
7	Psi_{JT} Junction-to-package top	0.83	N/A
8	Psi_{JB} Junction-to-board	7.88	N/A

† Numbers are based on simulations.
‡ m/s = meters per second

thermal resistance characteristics (S-PBGA package) [CLZ]

NO		°C/W†	Air Flow (m/s‡)
1	$R\Theta_{JC}$ Junction-to-case	3.11	N/A
2	$R\Theta_{JB}$ Junction-to-board	9.95	N/A
3	$R\Theta_{JA}$ Junction-to-free air	19.6	0.00
4	$R\Theta_{JA}$ Junction-to-free air	17.3	0.5
5	$R\Theta_{JA}$ Junction-to-free air	15.6	1.0
6	$R\Theta_{JA}$ Junction-to-free air	14.7	2.00
7	Psi_{JT} Junction-to-package top	0.83	N/A
8	Psi_{JB} Junction-to-board	7.88	N/A

† Numbers are based on simulations.
‡ m/s = meters per second

Packaging Information

The following addendum table (device orderables) and packaging information reflect the most current released data available for the TMS320TCI100 device(s) — GLZ, ZLZ and CLZ. This data is subject to change without notice and without revision of this document.

ORDERABLE DEVICE	STATUS(1)	PACKAGE TYPE	PACKAGE DRAWING	PINS	PACKAGE QUANTITY	ECO-STATUS(2)	Lead/Ball Finish	MSL, PEAK TEMP(3)
TMS320TCI100GLZ6	ACTIVE	FCBGA	GLZ	532	60	TBD	SnPb	Level−4−220C−72HR
TMS320TCI100GLZ7	ACTIVE	FCBGA	GLZ	532	60	TBD	SnPb	Level−4−220C−72HR
TMS320TCI100GLZA6	ACTIVE	FCBGA	GLZ	532	60	TBD	SnPb	Level−4−220C−72HR
TMS320TCI100GLZA7	ACTIVE	FCBGA	GLZ	532	60	TBD	SnPb	Level−4−220C−72HR
TMS320TCI100BGLZ6	ACTIVE	FCBGA	GLZ	532	60	TBD	SnPb	Level−4−220C−72HR
TMS320TCI100BGLZ7	ACTIVE	FCBGA	GLZ	532	60	TBD	SnPb	Level−4−220C−72HR
TMS320TCI100BGLZA6	ACTIVE	FCBGA	GLZ	532	60	TBD	SnPb	Level−4−220C−72HR
TMS320TCI100BGLZA7	ACTIVE	FCBGA	GLZ	532	60	TBD	SnPb	Level−4−220C−72HR
TMS320TCI100ZLZ6	ACTIVE	FCBGA	ZLZ	532	60	Pb−Free (RoHS Exempt)	SnAgCu	Level−4−260C−72HR
TMS320TCI100ZLZ7	ACTIVE	FCBGA	ZLZ	532	60	Pb−Free (RoHS Exempt)	SnAgCu	Level−4−260C−72HR
TMS320TCI100ZLZA6	ACTIVE	FCBGA	ZLZ	532	60	Pb−Free (RoHS Exempt)	SnAgCu	Level−4−260C−72HR
TMS320TCI100ZLZA7	ACTIVE	FCBGA	ZLZ	532	60	Pb−Free (RoHS Exempt)	SnAgCu	Level−4−260C−72HR
TMS320TCI100BZLZ6	ACTIVE	FCBGA	ZLZ	532	60	Pb−Free (RoHS Exempt)	SnAgCu	Level−4−260C−72HR
TMS320TCI100BZLZ7	ACTIVE	FCBGA	ZLZ	532	60	Pb−Free (RoHS Exempt)	SnAgCu	Level−4−260C−72HR
TMS320TCI100BZLZA6	ACTIVE	FCBGA	ZLZ	532	60	Pb−Free (RoHS Exempt)	SnAgCu	Level−4−260C−72HR
TMS320TCI100BZLZA7	ACTIVE	FCBGA	ZLZ	532	60	Pb−Free (RoHS Exempt)	SnAgCu	Level−4−260C−72HR
TMS320TCI100BCLZ6	ACTIVE	FCBGA	CLZ	532	60	Green	SnAgCu	Level−4−260C−72HR
TMS320TCI100BCLZ7	ACTIVE	FCBGA	CLZ	532	60	Green	SnAgCu	Level−4−260C−72HR
TMS320TCI100BCLZA6	ACTIVE	FCBGA	CLZ	532	60	Green	SnAgCu	Level−4−260C−72HR
TMS320TCI100BCLZA7	ACTIVE	FCBGA	CLZ	532	60	Green	SnAgCu	Level−4−260C−72HR

(1) The marketing status values are defined as follows:
PREVIEW: Device has been announced but is not in production. Samples may or may not be available.
ACTIVE: Active device available for purchase from a TI Authorized Distributor.
NRND: Not recommended for new designs. Device is in production to support existing customers, but TI does not recommend using this part in a new design.
LIFEBUY: TI has announced that the device will be discontinued, and a lifetime-buy period is in effect.
OBSOLETE: TI has discontinued production of the device.

(2) Eco-Status information—Additional details including specific material content can be accessed at www.ti.com/leadfree
TBD: The Pb−Free/Green conversion plan has not been defined.
Pb-Free: TI defines “Lead (Pb)-Free” or “Pb-Free” to mean RoHS compatible, including a lead concentration that does not exceed 0.1% of total product weight, and, if designed to be soldered, suitable for use in specified lead-free soldering processes.
Green: TI defines “Green” to mean Lead (Pb)-Free and in addition, uses package materials that do not contain halogens, including bromine (Br), or antimony (Sb) above 0.1% of total product weight.

(3) **MSL, Peak Temp.**—The Moisture Sensitivity Level rating according to the JEDEC industry standard classifications and peak solder temperature.

CLZ (S-PBGA-N532) PLASTIC BALL GRID ARRAY

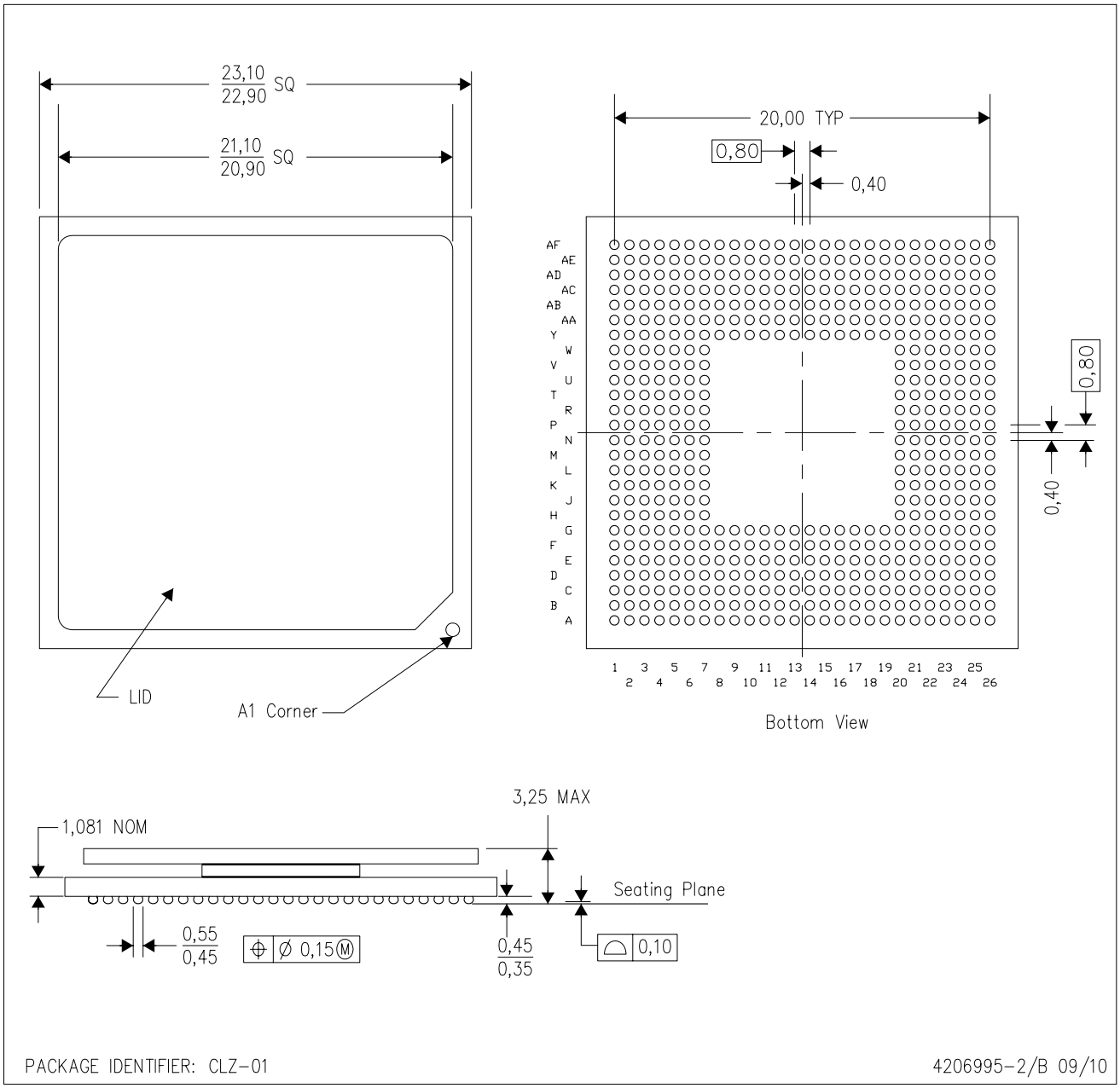

NOTES:
A. All linear dimensions are in millimeters. Dimensioning and tolerancing per ASME Y14.5M-1994.
B. This drawing is subject to change without notice.
C. Thermally enhanced plastic package with a lid.
D. Flip chip application only.
E. Pb-free die bump and solder ball.

GLZ (S–PBGA–N532) PLASTIC BALL GRID ARRAY

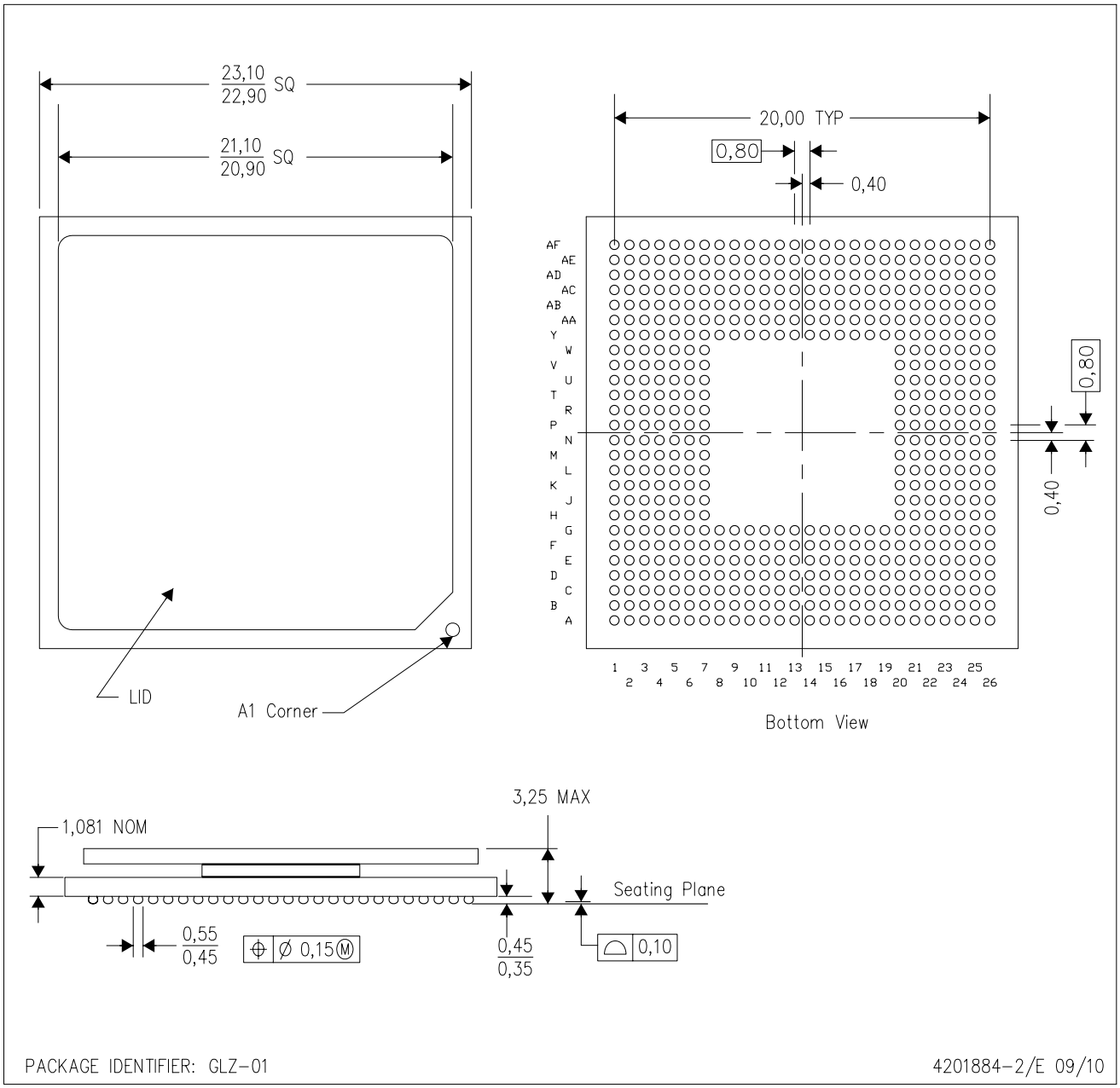

NOTES:
A. All linear dimensions are in millimeters. Dimensioning and tolerancing per ASME Y14.5M–1994.
B. This drawing is subject to change without notice.
C. Thermally enhanced plastic package with a lid.
D. Flip chip application only.

ZLZ (S-PBGA-N532) PLASTIC BALL GRID ARRAY

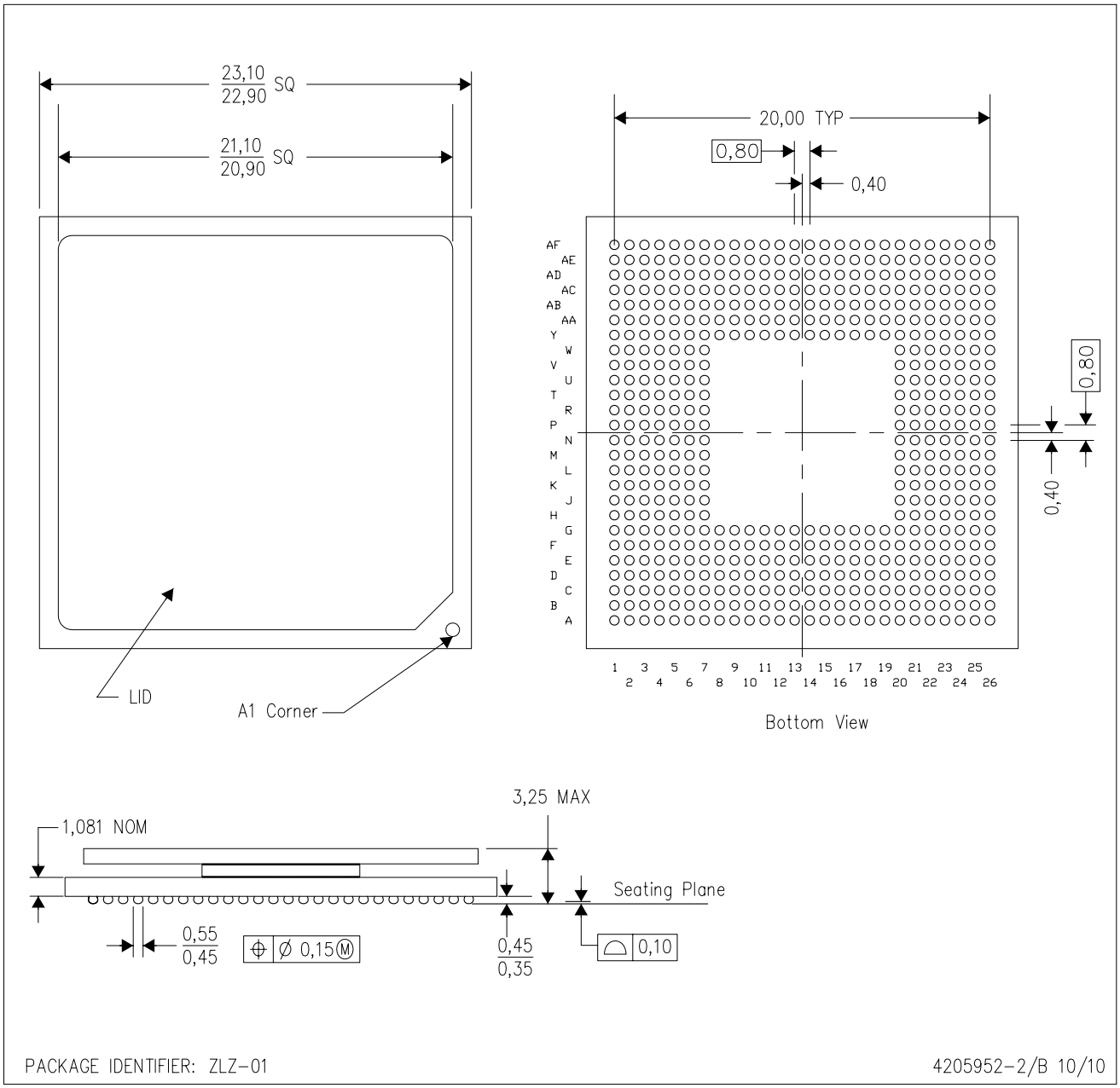

NOTES:
A. All linear dimensions are in millimeters. Dimensioning and tolerancing per ASME Y14.5M-1994.
B. This drawing is subject to change without notice.
C. Thermally enhanced plastic package with a lid.
D. Flip chip application only.

IMPORTANT NOTICE

Texas Instruments Incorporated and its subsidiaries (TI) reserve the right to make corrections, modifications, enhancements, improvements, and other changes to its products and services at any time and to discontinue any product or service without notice. Customers should obtain the latest relevant information before placing orders and should verify that such information is current and complete. All products are sold subject to TI's terms and conditions of sale supplied at the time of order acknowledgment.

TI warrants performance of its hardware products to the specifications applicable at the time of sale in accordance with TI's standard warranty. Testing and other quality control techniques are used to the extent TI deems necessary to support this warranty. Except where mandated by government requirements, testing of all parameters of each product is not necessarily performed.

TI assumes no liability for applications assistance or customer product design. Customers are responsible for their products and applications using TI components. To minimize the risks associated with customer products and applications, customers should provide adequate design and operating safeguards.

TI does not warrant or represent that any license, either express or implied, is granted under any TI patent right, copyright, mask work right, or other TI intellectual property right relating to any combination, machine, or process in which TI products or services are used. Information published by TI regarding third-party products or services does not constitute a license from TI to use such products or services or a warranty or endorsement thereof. Use of such information may require a license from a third party under the patents or other intellectual property of the third party, or a license from TI under the patents or other intellectual property of TI.

Reproduction of TI information in TI data books or data sheets is permissible only if reproduction is without alteration and is accompanied by all associated warranties, conditions, limitations, and notices. Reproduction of this information with alteration is an unfair and deceptive business practice. TI is not responsible or liable for such altered documentation. Information of third parties may be subject to additional restrictions.

Resale of TI products or services with statements different from or beyond the parameters stated by TI for that product or service voids all express and any implied warranties for the associated TI product or service and is an unfair and deceptive business practice. TI is not responsible or liable for any such statements.

TI products are not authorized for use in safety-critical applications (such as life support) where a failure of the TI product would reasonably be expected to cause severe personal injury or death, unless officers of the parties have executed an agreement specifically governing such use. Buyers represent that they have all necessary expertise in the safety and regulatory ramifications of their applications, and acknowledge and agree that they are solely responsible for all legal, regulatory and safety-related requirements concerning their products and any use of TI products in such safety-critical applications, notwithstanding any applications-related information or support that may be provided by TI. Further, Buyers must fully indemnify TI and its representatives against any damages arising out of the use of TI products in such safety-critical applications.

TI products are neither designed nor intended for use in military/aerospace applications or environments unless the TI products are specifically designated by TI as military-grade or "enhanced plastic." Only products designated by TI as military-grade meet military specifications. Buyers acknowledge and agree that any such use of TI products which TI has not designated as military-grade is solely at the Buyer's risk, and that they are solely responsible for compliance with all legal and regulatory requirements in connection with such use.

TI products are neither designed nor intended for use in automotive applications or environments unless the specific TI products are designated by TI as compliant with ISO/TS 16949 requirements. Buyers acknowledge and agree that, if they use any non-designated products in automotive applications, TI will not be responsible for any failure to meet such requirements.

Following are URLs where you can obtain information on other Texas Instruments products and application solutions:

Products		**Applications**	
Audio	www.ti.com/audio	Communications and Telecom	www.ti.com/communications
Amplifiers	amplifier.ti.com	Computers and Peripherals	www.ti.com/computers
Data Converters	dataconverter.ti.com	Consumer Electronics	www.ti.com/consumer-apps
DLP® Products	www.dlp.com	Energy and Lighting	www.ti.com/energy
DSP	dsp.ti.com	Industrial	www.ti.com/industrial
Clocks and Timers	www.ti.com/clocks	Medical	www.ti.com/medical
Interface	interface.ti.com	Security	www.ti.com/security
Logic	logic.ti.com	Space, Avionics and Defense	www.ti.com/space-avionics-defense
Power Mgmt	power.ti.com	Transportation and Automotive	www.ti.com/automotive
Microcontrollers	microcontroller.ti.com	Video and Imaging	www.ti.com/video
RFID	www.ti-rfid.com	Wireless	www.ti.com/wireless-apps
RF/IF and ZigBee® Solutions	www.ti.com/lprf		

TI E2E Community Home Page e2e.ti.com

Mailing Address: Texas Instruments, Post Office Box 655303, Dallas, Texas 75265
Copyright © 2011, Texas Instruments Incorporated