# 56F8365/56F8165

Data Sheet

*Technical Data*

**56F8300**
**16-bit Digital Signal Controllers**

MC56F8365
Rev. 9
02/2012

freescale.com

freescale™
semiconductor

## Document Revision History

| Version History | Description of Change |
|---|---|
| Rev 0 | Pre-release, Alpha customers only |
| Rev 1.0 | Initial Public Release |
| Rev 2.0 | Added output voltage maximum value and note to clarify in **Table 10-1**; also removed overall life expectancy note, since life expectancy is dependent on customer usage and must be determined by reliability engineering. Clarified value and unit measure for Maximum allowed $P_D$ in **Table 10-3**. Corrected note about average value for Flash Data Retention in **Table 10-4**. Added new RoHS-compliant orderable part numbers in **Table 13-1**. |
| Rev 3.0 | Corrected Data Flash on page 5 |
| Rev 4.0 | Deleted RSTO from Pin Group 2 (listed after **Table 10-1**). Deleted formula for Max Ambient Operating Temperature (Automotive) and Max Ambient Operating Temperature (Industrial) in **Table 10-4**. Added RoHS-compliance and “pb-free” language to back cover. |
| Rev 5.0 | Added information/corrected state during reset in **Table 2-2**. Clarified external reference crystal frequency for PLL in **Table 10-14** by increasing maximum value to 8.4MHz. |
| Rev 6.0 | Replaced “Tri-stated” with an explanation in State During Reset column in **Table 2-2**. |
| Rev. 7 | • Added the following note to the description of the TMS signal in **Table 2-2**:<br>**Note:** Always tie the TMS pin to $V_{DD}$ through a 2.2K resistor.<br>• Added the following note to the description of the $\overline{TRST}$ signal in **Table 2-2**:<br>**Note:** For normal operation, connect $\overline{TRST}$ directly to $V_{SS}$. If the design is to be used in a debugging environment, $\overline{TRST}$ may be tied to $V_{SS}$ through a 1K resistor. |
| Rev. 8 | • Remove pullup comment from PWM pins in **Table 2-2**.<br>• Add **Figure 10-1** showing current voltage characteristics.<br>• In **Table 10-23**, correct interpretation of Calibration Factors to be viewed as worst case factors.<br>• Add to **Table 10-23** the DC drift of ADC over temperature. |
| Rev 8.1 | • Removed “Preliminary” markings. |

**Please see http://www.freescale.com for the most current data sheet revision.**

# Table of Contents


**Part 1: Overview 5**
- 1.1. 56F8365/56F8165 Features 5
- 1.2. Device Description 8
- 1.3. Award-Winning Development Environment 10
- 1.4. Architecture Block Diagram 10
- 1.5. Product Documentation 13
- 1.6. Data Sheet Conventions 14

**Part 2: Signal/Connection Descriptions 14**
- 2.1. Introduction 14
- 2.2. Signal Pins 18

**Part 3: On-Chip Clock Synthesis (OCCS) 36**
- 3.1. Introduction 36
- 3.2. External Clock Operation 36
- 3.3. Registers 38

**Part 4: Memory Map 38**
- 4.1. Introduction 38
- 4.2. Program Map 39
- 4.3. Interrupt Vector Table 41
- 4.4. Data Map 44
- 4.5. Flash Memory Map 45
- 4.6. EOnCE Memory Map 46
- 4.7. Peripheral Memory Mapped Registers 47
- 4.8. Factory Programmed Memory 79

**Part 5: Interrupt Controller (ITCN) 79**
- 5.1. Introduction 79
- 5.2. Features 79
- 5.3. Functional Description 80
- 5.4. Block Diagram 81
- 5.5. Operating Modes 81
- 5.6. Register Descriptions 82
- 5.7. Resets 109

**Part 6: System Integration Module (SIM) 110**
- 6.1. Introduction 110
- 6.2. Features 110
- 6.3. Operating Modes 111
- 6.4. Operating Mode Register 111
- 6.5. Register Descriptions 112
- 6.6. Clock Generation Overview 127
- 6.7. Power-Down Modes Overview 127
- 6.8. Stop and Wait Mode Disable Function 128
- 6.9. Resets 128

**Part 7: Security Features 129**
- 7.1. Operation with Security Enabled 129
- 7.2. Flash Access Blocking Mechanisms 129

**Part 8: General Purpose Input/Output (GPIO) 133**
- 8.1. Introduction 133
- 8.2. Memory Maps 133
- 8.3. Configuration 133

**Part 9: Joint Test Action Group (JTAG) 138**
- 9.1. JTAG Information 138

**Part 10: Specifications 138**
- 10.1. General Characteristics 138
- 10.2. DC Electrical Characteristics 143
- 10.3. AC Electrical Characteristics 148
- 10.4. Flash Memory Characteristics 148
- 10.5. External Clock Operation Timing 149
- 10.6. Phase Locked Loop Timing 149
- 10.7. Crystal Oscillator Timing 150
- 10.8. Reset, Stop, Wait, Mode Select, and Interrupt Timing 150
- 10.9. Serial Peripheral Interface (SPI) Timing 153
- 10.10. Quad Timer Timing 157
- 10.11. Quadrature Decoder Timing 157
- 10.12. Serial Communication Interface (SCI) Timing 158
- 10.13. Controller Area Network (CAN) Timing 159
- 10.14. JTAG Timing 159
- 10.15. Analog-to-Digital Converter (ADC) Parameters 161
- 10.16. Equivalent Circuit for ADC Inputs 163
- 10.17. Power Consumption 164

**Part 11: Packaging 166**
- 11.1. 56F8365 Package and Pin-Out Information 166
- 11.2. 56F8165 Package and Pin-Out Information 169

**Part 12: Design Considerations 174**
- 12.1. Thermal Design Considerations 174
- 12.2. Electrical Design Considerations 175
- 12.3. Power Distribution and I/O Ring Implementation 176

**Part 13: Ordering Information 178**

# 56F8365/56F8165 General Description

**Note:** *Features in italics are NOT available in the 56F8165 device.*

- Up to 60 MIPS at 60MHz core frequency
- DSP and MCU functionality in a unified, C-efficient architecture
- 512KB Program Flash
- *4KB Program RAM*
- *32KB Data Flash*
- 32KB Data RAM
- 32KB Boot Flash
- *Up to two* 6-channel PWM modules
- Four 4-channel, 12-bit ADCs
- *Temperature Sensor*
- *Up to two* Quadrature Decoders
- *Up to two FlexCAN modules*
- Optional On-Chip Regulator
- Two Serial Communication Interfaces (SCIs)
- Up to two Serial Peripheral Interface (SPIs)
- Up to four general-purpose Quad Timers
- Computer Operating Properly (COP)/Watchdog
- JTAG/Enhanced On-Chip Emulation (OnCE™) for unobtrusive, real-time debugging
- Up to 49 GPIO lines
- 128-pin LQFP Package

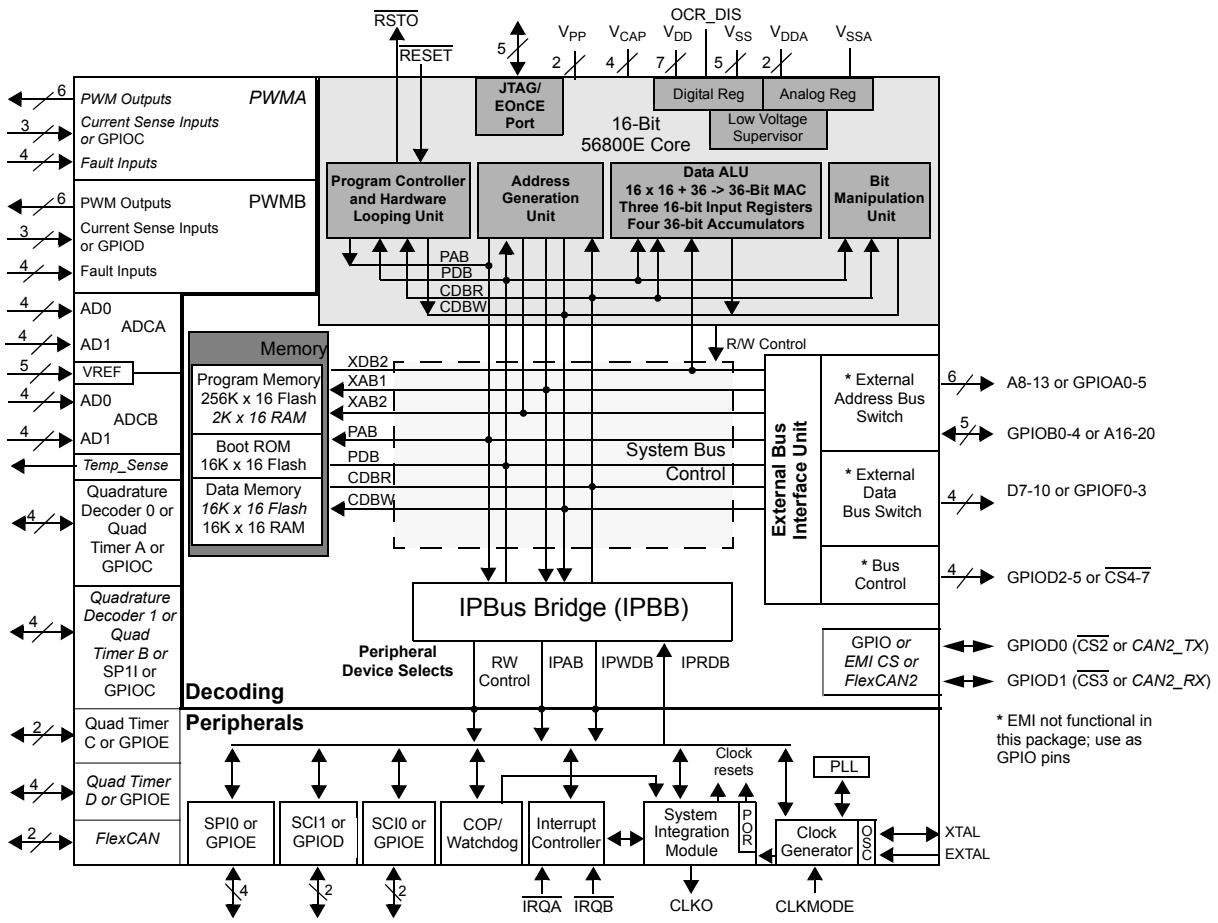


**56F8365/56F8165 Block Diagram**

# Part 1 Overview

## 1.1 56F8365/56F8165 Features

### 1.1.1 Core

- Efficient 16-bit 56800E family controller engine with dual Harvard architecture
- Up to 60 Million Instructions Per Second (MIPS) at 60MHz core frequency
- Single-cycle 16 × 16-bit parallel Multiplier-Accumulator (MAC)
- Four 36-bit accumulators, including extension bits
- Arithmetic and logic multi-bit shifter
- Parallel instruction set with unique DSP addressing modes
- Hardware DO and REP loops
- Three internal address buses

- Four internal data buses
- Instruction set supports both DSP and controller functions
- Controller-style addressing modes and instructions for compact code
- Efficient C compiler and local variable support
- Software subroutine and interrupt stack with depth limited only by memory
- JTAG/EOnCE debug programming interface

### 1.1.2 Differences Between Devices

**Table 1-1** outlines the key differences between the 56F8365 and 56F8165 devices.

**Table 1-1 Device Differences**

| Feature | 56F8365 | 56F8165 |
|---|---|---|
| Guaranteed Speed | 60MHz/60 MIPS | 40MHz/40MIPS |
| Program RAM | 4KB | Not Available |
| Data Flash | 32KB | Not Available |
| PWM | 2 x 6 | 1 x 6 |
| CAN | 2 | Not Available |
| Quad Timer | 4 | 2 |
| Quadrature Decoder | 2 x 4 | 1 x 4 |
| Temperature Sensor | 1 | Not Available |

### 1.1.3 Memory

**Note:** *Features in italics are NOT available in the 56F8165 device.*

- Harvard architecture permits as many as three simultaneous accesses to program and data memory
- Flash security protection feature
- On-chip memory, including a low-cost, high-volume Flash solution
  - 512KB of Program Flash
  - *4KB of Program RAM*
  - *32KB of Data Flash*
  - 32KB of Data RAM
  - 32KB of Boot Flash
- EEPROM emulation capability

### 1.1.4 Peripheral Circuits

**Note:** *Features in italics are NOT available in the 56F8165 device.*

- Pulse Width Modulator module:

  - In the 56F8365, two Pulse Width Modulator modules, each with six PWM outputs, three Current Sense inputs, and four Fault inputs; fault-tolerant design with dead time insertion; supports both center-aligned and edge-aligned modes
  - In the 56F8165, one Pulse Width Modulator module with six PWM outputs, three Current Sense inputs and three Fault inputs; fault-tolerant design with dead time insertion; supports both center-aligned and edge-aligned modes
- Four 12-bit, Analog-to-Digital Converters (ADCs), which support four simultaneous conversions with quad, 4-pin multiplexed inputs; ADC and PWM modules can be synchronized through Timer C, channels 2 and 3
- Quadrature Decoder:
  - In the 56F8365, two four-input Quadrature Decoders or two additional Quad Timers
  - In the 56F8165, one four-input Quadrature Decoder, which works in conjunction with Quad Timer A
- *Temperature Sensor can be connected, on the board, to any of the ADC inputs to monitor the on-chip temperature*
- Quad Timer:
  - In the 56F8365, four dedicated general-purpose Quad Timers totaling six dedicated pins: Timer C with two pins and Timer D with four pins
  - In the 56F8165, two Quad Timers; Timer A and Timer C both work in conjunction with GPIO
- Optional On-Chip Regulator
- *Up to two FlexCAN (CAN Version 2.0 B-compliant) modules with 2-pin port for transmit and receive*
- Two Serial Communication Interfaces (SCIs), each with two pins (or four additional GPIO lines)
- Up to two Serial Peripheral Interfaces (SPIs), both with configurable 4-pin port (or eight additional GPIO lines); SPI1 can also be used as Quadrature Decoder 1 or Quad Timer B
- Computer Operating Properly (COP)/Watchdog timer
- Two dedicated external interrupt pins
- 49 General Purpose I/O (GPIO) pins; 28 pins dedicated to GPIO
- External reset input pin for hardware reset
- External reset output pin for system reset
- Integrated low-voltage interrupt module
- JTAG/Enhanced On-Chip Emulation (OnCE) for unobtrusive, processor speed-independent, real-time debugging
- Software-programmable, Phase Lock Loop (PLL)-based frequency synthesizer for the core clock

### 1.1.5 Energy Information

- Fabricated in high-density CMOS with 5V-tolerant, TTL-compatible digital inputs
- On-board 3.3V down to 2.6V voltage regulator for powering internal logic and memories; can be disabled
- On-chip regulators for digital and analog circuitry to lower cost and reduce noise
- Wait and Stop modes available
- ADC smart power management
- Each peripheral can be individually disabled to save power

## 1.2 Device Description

The 56F8365 and 56F8165 are members of the 56800E core-based family of controllers. Each combines, on a single chip, the processing power of a Digital Signal Processor (DSP) and the functionality of a microcontroller with a flexible set of peripherals to create an extremely cost-effective solution. Because of their low cost, configuration flexibility, and compact program code, the 56F8365 and 56F8165 are well-suited for many applications. The devices include many peripherals that are especially useful for motion control, smart appliances, steppers, encoders, tachometers, limit switches, power supply and control, *automotive* control (56F8365 only), engine management, noise suppression, remote utility metering, industrial control for power, lighting, and automation applications.

The 56800E core is based on a Harvard-style architecture consisting of three execution units operating in parallel, allowing as many as six operations per instruction cycle. The MCU-style programming model and optimized instruction set allow straightforward generation of efficient, compact DSP and control code. The instruction set is also highly efficient for C/C++ Compilers to enable rapid development of optimized control applications.

The 56F8365 and 56F8165 support program execution from internal memories. Two data operands can be accessed from the on-chip data RAM per instruction cycle. These devices also provide two external dedicated interrupt lines and up to 49 General Purpose Input/Output (GPIO) lines, depending on peripheral configuration.

### 1.2.1 56F8365 Features

The 56F8365 controller includes 512KB of Program Flash and 32KB of Data Flash (each programmable through the JTAG port) with 4KB of Program RAM and 32KB of Data RAM. A total of 32KB of Boot Flash is incorporated for easy customer inclusion of field-programmable software routines that can be used to program the main Program and Data Flash memory areas. Both Program and Data Flash memories can be independently bulk erased or erased in pages. Program Flash page erase size is 1KB. Boot and Data Flash page erase size is 512 bytes. The Boot Flash memory can also be either bulk or page erased.

A key application-specific feature of the 56F8365 is the inclusion of two Pulse Width Modulator (PWM) modules. These modules each incorporate three complementary, individually programmable PWM signal output pairs (each module is also capable of supporting six independent PWM functions, for a total of 12 PWM outputs) to enhance motor control functionality. Complementary operation permits programmable dead time insertion, distortion correction via current sensing by software, and separate top and bottom output polarity control. The up-counter value is programmable to support a continuously variable PWM frequency. Edge-aligned and center-aligned synchronous pulse width control (0% to 100% modulation) is supported. The device is capable of controlling most motor types: ACIM (AC Induction Motors); both BDC and BLDC (Brush and Brushless DC motors); SRM and VRM (Switched and Variable Reluctance Motors); and stepper motors. The PWMs incorporate fault protection and cycle-by-cycle current limiting with sufficient output drive capability to directly drive standard optoisolators. A “smoke-inhibit”, write-once protection feature for key parameters is also included. A patented PWM waveform distortion correction circuit is also provided. Each PWM is double-buffered and includes interrupt controls to permit integral reload rates to be programmable from 1 to 16. The PWM modules provide reference outputs to synchronize the Analog-to-Digital Converters through two channels of Quad Timer C.

The 56F8365 incorporates two Quadrature Decoders capable of capturing all four transitions on the two-phase inputs, permitting generation of a number proportional to actual position. Speed computation capabilities accommodate both fast- and slow-moving shafts. An integrated watchdog timer in the Quadrature Decoder can be programmed with a time-out value to alert when no shaft motion is detected. Each input is filtered to ensure only true transitions are recorded.

This controller also provides a full set of standard programmable peripherals that include two Serial Communications Interfaces (SCIs); two Serial Peripheral Interfaces (SPIs); and four Quad Timers. Any of these interfaces can be used as General Purpose Input/Outputs (GPIOs) if that function is not required. Two Flex Controller Area Network (FlexCAN) interfaces (CAN Version 2.0 B-compliant) and an internal interrupt controller are also a part of the 56F8365.

### 1.2.2 56F8165 Features

The 56F8165 hybrid controller includes 128KB of Program Flash, programmable through the JTAG port, and 8KB of Data RAM. A total of 8KB of Boot Flash is incorporated for easy customer inclusion of field-programmable software routines that can be used to program the main Program Flash memory area. The Program Flash memory can be independently bulk erased or erased in pages; Program Flash page erase size is 1KB. The Boot Flash page erase size is 512 bytes; Boot Flash memory can also be either bulk or page erased.

A key application-specific feature of the 56F8165 is the inclusion of one Pulse Width Modulator (PWM) module. This module incorporates three complementary, individually programmable PWM signal output pairs and can also support six independent PWM functions to enhance motor control functionality. Complementary operation permits programmable dead time insertion, distortion correction via current sensing by software, and separate top and bottom output polarity control. The up-counter value is programmable to support a continuously variable PWM frequency. Edge-aligned and center-aligned synchronous pulse width control (0% to 100% modulation) is supported. The device is capable of controlling most motor types: ACIM (AC Induction Motors); both BDC and BLDC (Brush and Brushless DC motors); SRM and VRM (Switched and Variable Reluctance Motors); and stepper motors. The PWM incorporates fault protection and cycle-by-cycle current limiting with sufficient output drive capability to directly drive standard optoisolators. A “smoke-inhibit”, write-once protection feature for key parameters is also included. A patented PWM waveform distortion correction circuit is also provided. The PWM is double-buffered and includes interrupt controls to permit integral reload rates to be programmable from 1 to 16. The PWM module provides reference outputs to synchronize the Analog-to-Digital Converters through two channels of Quad Timer C.

The 56F8165 incorporates a Quadrature Decoder capable of capturing all four transitions on the two-phase inputs, permitting generation of a number proportional to actual position. Speed computation capabilities accommodate both fast- and slow-moving shafts. An integrated watchdog timer in the Quadrature Decoder can be programmed with a time-out value to alert when no shaft motion is detected. Each input is filtered to ensure only true transitions are recorded.

This controller also provides a full set of standard programmable peripherals that include two Serial Communications Interfaces (SCIs); two Serial Peripheral Interfaces (SPIs); and two Quad Timers. Any of these interfaces can be used as General Purpose Input/Outputs (GPIOs) if that function is not required. An

internal interrupt controller is also a part of the 56F8165.

## 1.3 Award-Winning Development Environment

Processor Expert™ (PE) provides a Rapid Application Design (RAD) tool that combines easy-to-use component-based software application creation with an expert knowledge system.

The CodeWarrior Integrated Development Environment is a sophisticated tool for code navigation, compiling, and debugging. A complete set of evaluation modules (EVMs) and development system cards will support concurrent engineering. Together, PE, CodeWarrior and EVMs create a complete, scalable tools solution for easy, fast, and efficient development.

## 1.4 Architecture Block Diagram

**Note:** *Features in italics are NOT available in the 56F8165 device and are shaded in the following figures.*

The 56F8365/56F8165 architecture is shown in **Figure 1-1** and **Figure 1-2**. **Figure 1-1** illustrates how the 56800E system buses communicate with internal memories and the IPBus Bridge. **Table 1-2** lists the internal buses in the 56800E architecture and provides a brief description of their function. **Figure 1-2** shows the peripherals and control blocks connected to the IPBus Bridge. The figures do not show the on-board regulator and power and ground signals. They also do not show the multiplexing between peripherals or the dedicated GPIOs. Please see **Part 2, Signal/Connection Descriptions,** to see which signals are multiplexed with those of other peripherals.

Also shown in **Figure 1-2** are connections between the PWM, Timer C and ADC blocks. These connections allow the PWM and/or Timer C to control the timing of the start of ADC conversions. The Timer C channel indicated can generate periodic start (SYNC) signals to the ADC to start its conversions. In another operating mode, the PWM load interrupt (SYNC output) signal is routed internally to the Timer C input channel as indicated. The timer can then be used to introduce a controllable delay before generating its output signal. The timer output then triggers the ADC. To fully understand this interaction, please see the **56F8300 Peripheral User Manual** for clarification on the operation of all three of these peripherals.

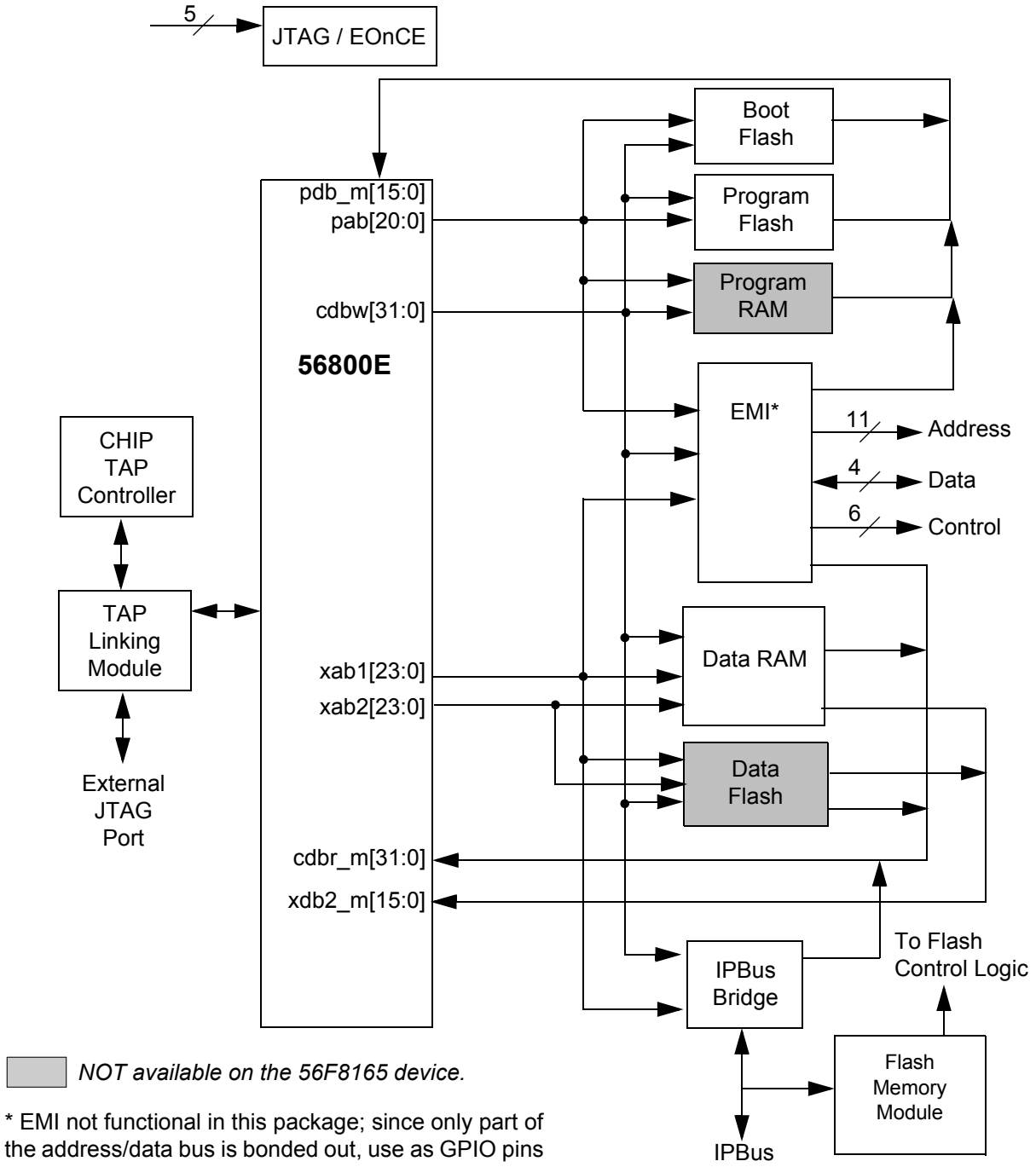


**Figure 1-1 System Bus Interfaces**

**Note:** Flash memories are encapsulated within the Flash Memory (FM) Module. Flash control is accomplished by the I/O to the FM over the peripheral bus, while reads and writes are completed between the core and the Flash memories.

**Note:** The primary data RAM port is 32 bits wide. Other data ports are 16 bits.

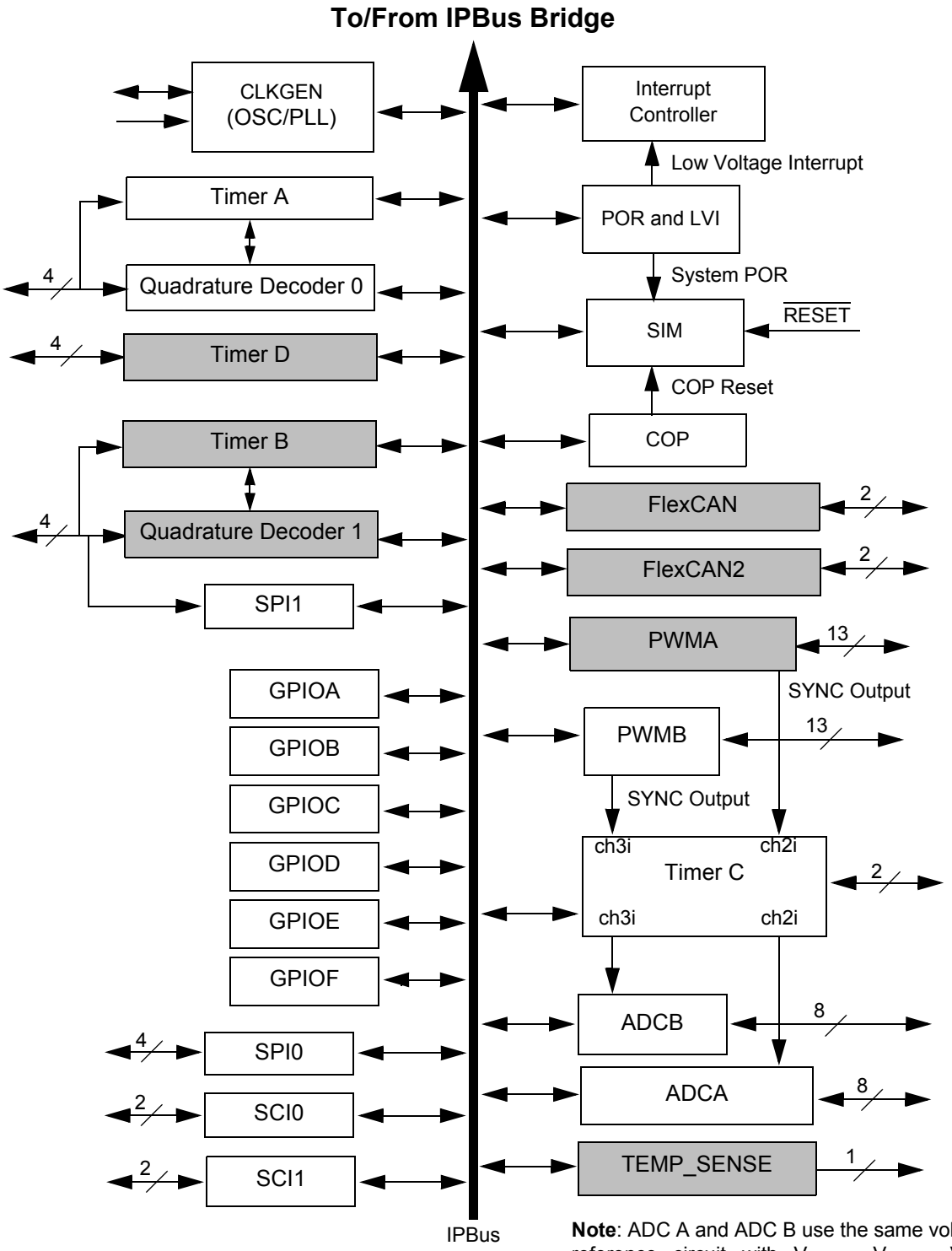


*NOT available on the 56F8165 device.*

**Note**: ADC A and ADC B use the same voltage reference circuit with $V_{REFH}$, $V_{REFP}$, $V_{REFMID}$, $V_{REFN}$, and $V_{REFLO}$ pins.

**Figure 1-2 Peripheral Subsystem**

**Table 1-2 Bus Signal Names**

| Name | Function |
|---|---|
| **Program Memory Interface** | |
| pdb_m[15:0] | Program data bus for instruction word fetches or read operations. |
| cdbw[15:0] | Primary core data bus used for program memory writes. (Only these 16 bits of the cdbw[31:0] bus are used for writes to program memory.) |
| pab[20:0] | Program memory address bus. Data is returned on pdb_m bus. |
| **Primary Data Memory Interface Bus** | |
| cdbr_m[31:0] | Primary core data bus for memory reads. Addressed via xab1 bus. |
| cdbw[31:0] | Primary core data bus for memory writes. Addressed via xab1 bus. |
| xab1[23:0] | Primary data address bus. Capable of addressing bytes[1], words, and long data types. Data is written on cdbw and returned on cdbr_m. Also used to access memory-mapped I/O. |
| **Secondary Data Memory Interface** | |
| xdb2_m[15:0] | Secondary data bus used for secondary data address bus xab2 in the dual memory reads. |
| xab2[23:0] | Secondary data address bus used for the second of two simultaneous accesses. Capable of addressing only words. Data is returned on xdb2_m. |
| **Peripheral Interface Bus** | |
| IPBus [15:0] | Peripheral bus accesses all on-chip peripherals registers. This bus operates at the same clock rate as the Primary Data Memory and therefore generates no delays when accessing the processor. Write data is obtained from cdbw. Read data is provided to cdbr_m. |

1. Byte accesses can only occur in the bottom half of the memory address space. The MSB of the address will be forced to 0.

## 1.5 Product Documentation

The documents listed in **Table 1-3** are required for a complete description and proper design with the 56F8365/56F8165 devices.. Documentation is available from local Freescale distributors, Freescale semiconductor sales offices, Freescale Literature Distribution Centers, or online at **http://www.freescale.com**.

**Table 1-3 Chip Documentation**

| Topic | Description | Order Number |
|---|---|---|
| DSP56800E Reference Manual | Detailed description of the 56800E family architecture, 16-bit controller core processor, and the instruction set | DSP56800EERM |
| 56F8300 Peripheral User Manual | Detailed description of peripherals of the 56F8300 family of devices | MC56F8300UM |

**Table 1-3 Chip Documentation**

| Topic | Description | Order Number |
|---|---|---|
| 56F8300 SCI/CAN Bootloader User Manual | Detailed description of the SCI/CAN Bootloaders 56F8300 family of devices | MC56F83xxBLUM |
| 56F8365/56F8165 Technical Data Sheet | Electrical and timing specifications, pin descriptions, device specific peripheral information and package descriptions (this document) | MC56F8365 |
| Errata | Details any chip issues that might be present | MC56F8365E<br>MC56F8165E |

## 1.6 Data Sheet Conventions

This data sheet uses the following conventions:

$\overline{\text{OVERBAR}}$ This is used to indicate a signal that is active when pulled low. For example, the $\overline{\text{RESET}}$ pin is active when low.

"asserted" A high true (active high) signal is high or a low true (active low) signal is low.

"deasserted" A high true (active high) signal is low or a low true (active low) signal is high.

Examples:

| Signal/Symbol | Logic State | Signal State | Voltage[1] |
|---|---|---|---|
| $\overline{\text{PIN}}$ | True | Asserted | $V_{IL}/V_{OL}$ |
| $\overline{\text{PIN}}$ | False | Deasserted | $V_{IH}/V_{OH}$ |
| PIN | True | Asserted | $V_{IH}/V_{OH}$ |
| PIN | False | Deasserted | $V_{IL}/V_{OL}$ |

1. Values for $V_{IL}$, $V_{OL}$, $V_{IH}$, and $V_{OH}$ are defined by individual product specifications.

# Part 2 Signal/Connection Descriptions

## 2.1 Introduction

The input and output signals of the 56F8365 and 56F8165 are organized into functional groups, as detailed in **Table 2-1** and as illustrated in **Figure 2-1**. In **Table 2-2**, each table row describes the signal or signals present on a pin.

## Table 2-1 Functional Group Pin Allocations

| Functional Group | Number of Pins in Package | |
|---|---|---|
| | 56F8365 | 56F8165 |
| Power ($V_{DD}$ or $V_{DDA}$) | 9 | 9 |
| Power Option Control | 1 | 1 |
| Ground ($V_{SS}$ or $V_{SSA}$) | 6 | 6 |
| Supply Capacitors[1] & $V_{PP}$ | 6 | 6 |
| PLL and Clock | 4 | 4 |
| Bus Control | 6 | 6 |
| Interrupt and Program Control | 4 | 4 |
| Pulse Width Modulator (PWM) Ports | 26 | 13 |
| Serial Peripheral Interface (SPI) Port 0 | 4 | 4 |
| Serial Peripheral Interface (SPI) Port 1 | — | 4 |
| Quadrature Decoder Port 0[2] | 4 | 4 |
| Quadrature Decoder Port 1[3] | 4 | — |
| Serial Communications Interface (SCI) Ports | 4 | 4 |
| CAN Ports | 2 | — |
| Analog-to-Digital Converter (ADC) Ports | 21 | 21 |
| Timer Module Ports | 6 | 4 |
| JTAG/Enhanced On-Chip Emulation (EOnCE) | 5 | 5 |
| Temperature Sense | 1 | — |
| Dedicated GPIO ( Address Bus = 11; Data Bus = 4[4]) | 28 | 28 |

1. If the on-chip regulator is disabled, the $V_{CAP}$ pins serve as 2.5V $V_{DD_CORE}$ power inputs
2. Alternately, can function as Quad Timer pins or GPIO
3. Pins in this section can function as Quad Timer, SPI 1, orGPIO
4. EMI not functional in these packages; use as GPIO pins.

**Note:** See Table 1-1 for 56F8165 functional differences.

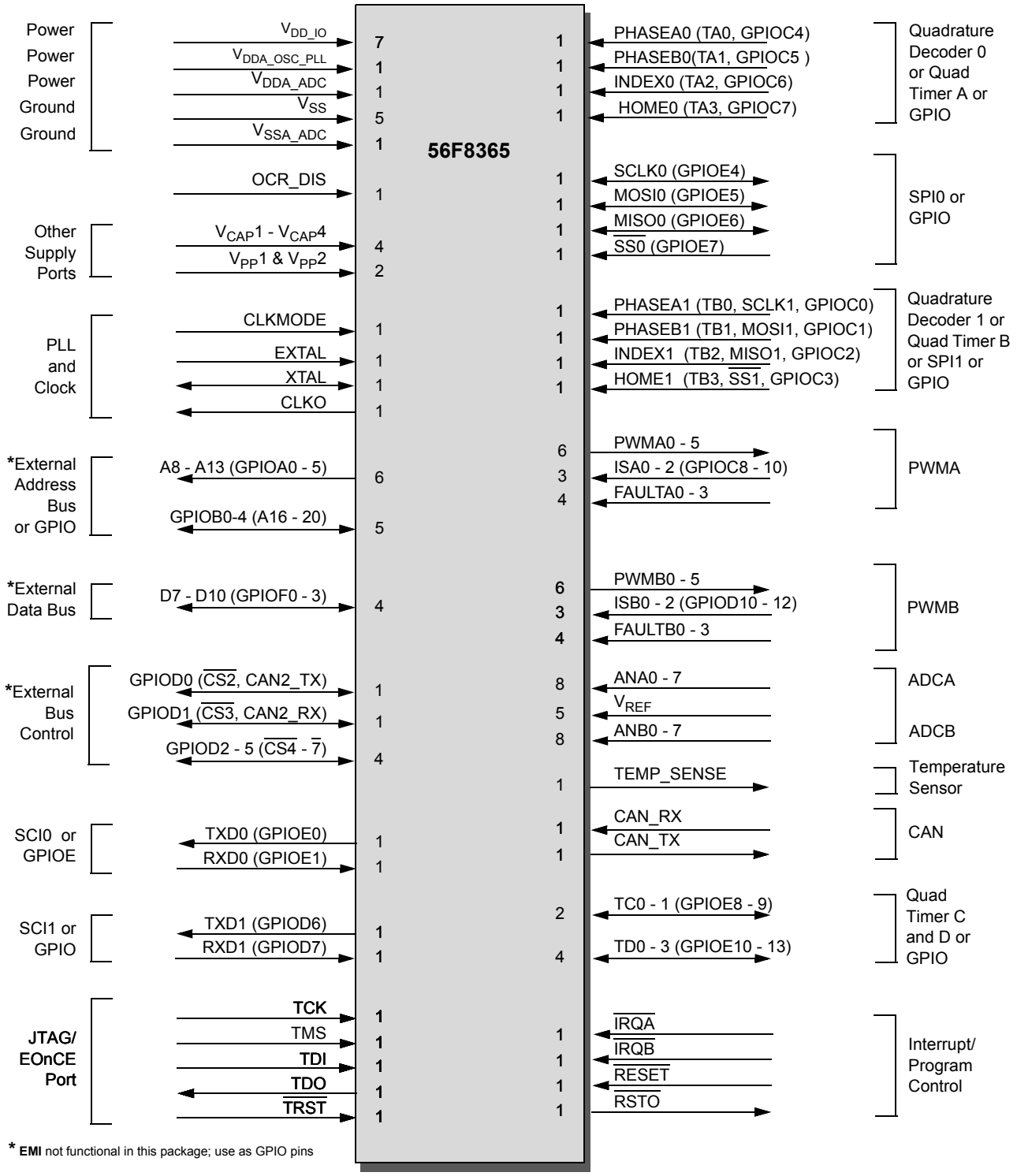


**Figure 2-1 56F8365 Signals Identified by Functional Group[1] (128-Pin LQFP)**

1. Alternate pin functionality is shown in parenthesis; pin direction/type shown is the default functionality.

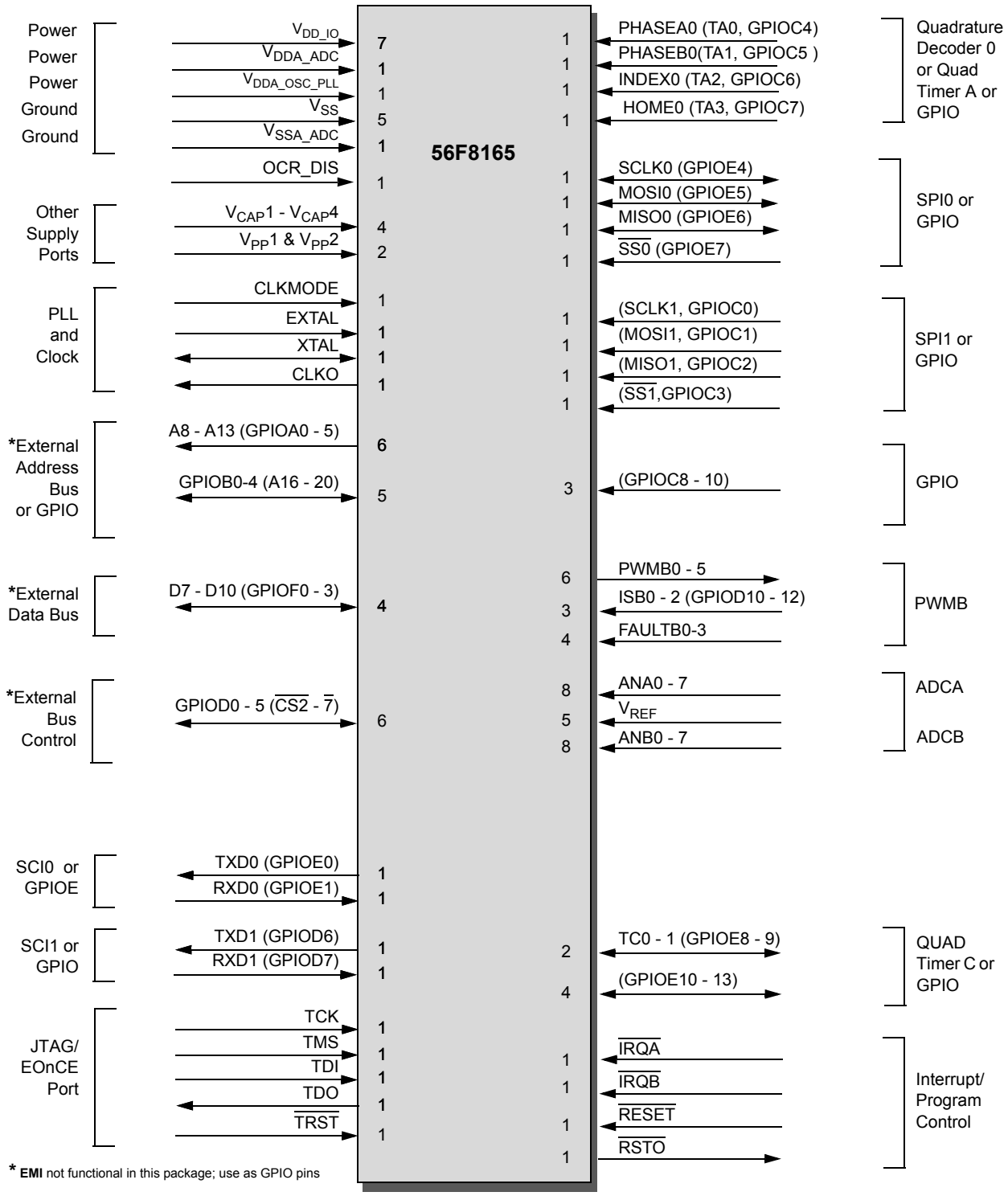


**Figure 2-2 56F8165 Signals Identified by Functional Group[1] (128-Pin LQFP)**

1. Alternate pin functionality is shown in parenthesis; pin direction/type shown is the default functionality.

## 2.2 Signal Pins

After reset, each pin is configured for its primary function (listed first). Any alternate functionality must be programmed.

EMI is not functional in this package; since only part of the address/data bus is bonded out, use as GPIO pins.

**Note:** *Signals in italics are NOT available in the 56F8165 device.*

If the "State During Reset" lists more than one state for a pin, the first state is the actual reset state. Other states show the reset condition of the alternate function, which you get if the alternate pin function is selected without changing the configuration of the alternate peripheral. For example, the A8/GPIOA0 pin shows that it is tri-stated during reset. If the GPIOA_PER is changed to select the GPIO function of the pin, it will become an input if no other registers are changed.

**Table 2-2 Signal and Package Information for the 128-Pin LQFP**

| Signal Name | Pin No. | Type | State During Reset | Signal Description |
|---|---|---|---|---|
| $V_{DD_IO}$ | 4 | Supply | | **I/O Power** — This pin supplies 3.3V power to the chip I/O interface and also the Processor core throught the on-chip voltage regulator, if it is enabled. |
| $V_{DD_IO}$ | 14 | | | |
| $V_{DD_IO}$ | 25 | | | |
| $V_{DD_IO}$ | 36 | | | |
| $V_{DD_IO}$ | 62 | | | |
| $V_{DD_IO}$ | 76 | | | |
| $V_{DD_IO}$ | 112 | | | |
| $V_{DDA_ADC}$ | 94 | Supply | | **ADC Power** — This pin supplies 3.3V power to the ADC modules. It must be connected to a clean analog power supply. |
| $V_{DDA_OSC_PLL}$ | 72 | Supply | | **Oscillator** and **PLL Power** — This pin supplies 3.3V power to the OSC and to the internal regulator that in turn supplies the Phase Locked Loop. It must be connected to a clean analog power supply. |

## Table 2-2 Signal and Package Information for the 128-Pin LQFP (Continued)

| Signal Name | Pin No. | Type | State During Reset | Signal Description |
|---|---|---|---|---|
| $V_{SS}$ | 3 | Supply | | **Ground** — These pins provide ground for chip logic and I/O drivers. |
| $V_{SS}$ | 21 | | | |
| $V_{SS}$ | 35 | | | |
| $V_{SS}$ | 59 | | | |
| $V_{SS}$ | 65 | | | |
| $V_{SSA_ADC}$ | 95 | Supply | | **ADC Analog Ground** — This pin supplies an analog ground to the ADC modules. |
| **OCR_DIS** | 71 | Input | Input | **On-Chip Regulator Disable** —<br>Tie this pin to $V_{SS}$ to enable the on-chip regulator<br>Tie this pin to $V_{DD}$ to disable the on-chip regulator<br><br>**This pin is intended to be a static DC signal from power-up to shut down. Do not try to toggle this pin for power savings during operation.** |
| $V_{CAP}1$ | 49 | Supply | Supply | $V_{CAP}$**1 - 4** — When OCR_DIS is tied to $V_{SS}$ (regulator enabled), connect each pin to a 2.2µF or greater bypass capacitor in order to bypass the core logic voltage regulator, required for proper chip operation. When OCR_DIS is tied to $V_{DD}$ (regulator disabled), these pins become $V_{DD_CORE}$ and should be connected to a regulated 2.5V power supply.<br><br>**Note: This bypass is required even if the chip is powered with an external supply.** |
| $V_{CAP}2$ | 122 | | | |
| $V_{CAP}3$ | 75 | | | |
| $V_{CAP}4$ | 13 | | | |
| $V_{PP}1$ | 119 | Input | Input | $V_{PP}$**1 - 2** — These pins should be left unconnected as an open circuit for normal functionality. |
| $V_{PP}2$ | 5 | | | |
| **CLKMODE** | 79 | Input | Input | **Clock Input Mode Selection** — This input determines the function of the XTAL and EXTAL pins.<br><br>1 = External clock input on XTAL is used to directly drive the input clock of the chip. The EXTAL pin should be grounded.<br><br>0 = A crystal or ceramic resonator should be connected between XTAL and EXTAL. |
| **EXTAL** | 74 | Input | Input | **External Crystal Oscillator Input** — This input can be connected to an 8MHz external crystal. Tie this pin low if XTAL is driven by an external clock source. |

## Table 2-2 Signal and Package Information for the 128-Pin LQFP (Continued)

| Signal Name | Pin No. | Type | State During Reset | Signal Description |
|---|---|---|---|---|
| **XTAL** | 73 | Input/ Output | Chip-driven | **Crystal Oscillator Output** — This output connects the internal crystal oscillator output to an external crystal.<br><br>If an external clock is used, XTAL must be used as the input and EXTAL connected to GND.<br><br>The input clock can be selected to provide the clock directly to the core. This input clock can also be selected as the input clock for the on-chip PLL. |
| **CLKO** | 6 | Output | In reset, output is disabled | **Clock Output** — This pin outputs a buffered clock signal. Using the SIM CLKO Select Register (SIM_CLKOSR), this pin can be programmed as any of the following: disabled, CLK_MSTR (system clock), IPBus clock, oscillator output, prescaler clock and postscaler clock. Other signals are also available for test purposes.<br><br>See **Part 6.5.7** for details. |
| **A8 (GPIOA0)** | 15 | Output<br><br>Schmitt Input/ Output | In reset, output is disabled, pull-up is enabled | **Address Bus** — A8 - A13 specify six of the address lines for external program or data memory accesses. Depending upon the state of the DRV bit in the EMI bus control register (BCR), A8 - A13 and EMI control signals are tri-stated when the external bus is inactive.<br><br>**Port A GPIO** — These six GPIO pins can be individually programmed as input or output pins.<br><br>After reset, these pins default to address bus functionality and must be programmed as GPIO.<br><br>To deactivate the internal pull-up resistor, clear the appropriate GPIO bit in the GPIOA_PUR register.<br><br>Example: GPIOA0, clear bit 0 in the GPIOA_PUR register.<br><br>**Note:** Primary function is not available in this package configuration; GPIO function must be used instead. |
| **A9 (GPIOA1)** | 16 | | | |
| **A10 (GPIOA2)** | 17 | | | |
| **A11 (GPIOA3)** | 18 | | | |
| **A12 (GPIOA4)** | 19 | | | |
| **A13 (GPIOA5)** | 20 | | | |

## Table 2-2 Signal and Package Information for the 128-Pin LQFP (Continued)

| Signal Name | Pin No. | Type | State During Reset | Signal Description |
|---|---|---|---|---|
| **GPIOB0**<br><br>**(A16)** | 27 | Schmitt Input/ Output<br><br>Output | Input, pull-up enabled | **Port B GPIO** — These four GPIO pins can be individually programmed as an input or output pin.<br><br>**Address Bus** — A16 - A19 specify four of the address lines for external program or data memory accesses. Depending upon the state of the DRV bit in the EMI bus control register (BCR), A16 - A19 and EMI control signals are tri-stated when the external bus is inactive.<br><br>After reset, the default state is GPIO.<br><br>To deactivate the internal pull-up resistor, clear bit 0 in the GPIOB_PUR register.<br><br>Example: GPIOB1, clear bit 1 in the GPIOB_PUR register. |
| **GPIOB1**<br><br>**(A17)** | 28 | | | |
| **GPIOB2**<br><br>**(A18)** | 29 | | | |
| **GPIOB3**<br><br>**(A19)** | 30 | | | |
| **GPIOB4**<br><br>**(A20)**<br><br>**(prescaler_ clock)** | 31 | Schmitt Input/ Output<br><br>Output<br><br>Output | Input, pull-up enabled | **Port B GPIO** — This GPIO pin can be individually programmed as an input or output pin.<br><br>**Address Bus** — A20 specifies one of the address lines for external program or data memory accesses. Depending upon the state of the DRV bit in the EMI bus control register (BCR), A20 and EMI control signals are tri-stated when the external bus is inactive.<br><br>**Clock Output** — can be used to monitor the prescaler_clock on GPIOB4.<br><br>After reset, the default state is GPIO.<br><br>This pin can also be used to view the prescaler_clock. In these cases, the GPIOB_PER can be used to disable the GPIO. The CLKOSR register in the SIM can then be used to choose between address and clock functions; see **Part 6.5.7** for details<br><br>To deactivate the internal pull-up resistor, clear bit 4 in the GPIOB_PUR register. |

## Table 2-2 Signal and Package Information for the 128-Pin LQFP (Continued)

| Signal Name | Pin No. | Type | State During Reset | Signal Description |
|---|---|---|---|---|
| **D7**<br><br>**(GPIOF0)** | 22 | Input/ Output<br><br>Input/ Output | In reset, output is disabled, pull-up is enabled | **Data Bus** — D7 - D10 specify part of the data for external program or data memory accesses. Depending upon the state of the DRV bit in the SEMI bus control register (BCR), D7 - D10 are tri-stated when the external bus is inactive<br><br>**Port F GPIO** — These four GPIO pins can be individually programmed as input or output pins.<br><br>After reset, these pins default to Data Bus functionality and should be programmed as GPIO.<br><br>To deactivate the internal pull-up resistor, clear the appropriate GPIO bit in the GPIOF_PUR register.<br><br>Example: GPIOF0, clear bit 0 in the GPIOF_PUR register.<br><br>**Note:** Primary function is not available in this package configuration; GPIO function must be used instead. |
| **D8 (GPIOF1)** | 23 | | | |
| **D9 (GPIOF2)** | 24 | | | |
| **D10 (GPIOF3)** | 26 | | | |
| **GPIOD0**<br><br>**($\overline{\text{CS2}}$)**<br><br>**(*CAN2_TX*)** | 42 | Input/ Output<br><br>Output<br><br>Open Drain Output | Input, pull-up enabled | **Port D GPIO** — This GPIO pin can be individually programmed as an input or output pin.<br><br>**Chip Select** — $\overline{\text{CS2}}$ may be programmed within the EMI module to act as a chip select for specific areas of the external memory map. Depending upon the state of the DRV bit in the EMI Bus Control Register (BCR),$\overline{\text{CS2}}$ is tri-stated when the external bus is inactive.<br><br>**FlexCAN2 Transmit Data** — CAN output.<br><br>At reset, this pin is configured as GPIO. This configuration can be changed by setting bit 0 in the GPIO_D_PER register, then change bit 4 in the SIM_GPS register to select the desired peripheral function.<br><br>To deactivate the internal pull-up resistor, clear bit 0 in the GPIOD_PUR register. |

## Table 2-2 Signal and Package Information for the 128-Pin LQFP (Continued)

| Signal Name | Pin No. | Type | State During Reset | Signal Description |
|---|---|---|---|---|
| **GPIOD1**<br><br>**($\overline{CS3}$)**<br><br>(***CAN2_RX***) | 43 | Schmitt Input/ Output<br><br>Output<br><br>Schmitt Input | Input, pull-up enabled | **Port D GPIO** — This GPIO pin can be individually programmed as an input or output pin.<br><br>**Chip Select** — $\overline{CS3}$ may be programmed within the EMI module to act as a chip select for specific areas of the external memory map.<br><br>Depending upon the state of the DRV bit in the EMI Bus Control Register (BCR), $\overline{CS3}$ is tri-stated when the external bus is inactive.<br><br>**FlexCAN2 Receive Data** — This is the CAN input. This pin has an internal pull-up resistor.<br><br>At reset, this pin is configured as GPIO. This configuration can be changed by setting bit 1 in the GPIO_D_PER register, then change bit 5 in the SIM_GPS register to select the desired peripheral function.<br><br>To deactivate the internal pull-up resistor, clear bit 1 in the GPIOD_PUR register. |
| **GPIOD2**<br><br>**($\overline{CS4}$)** | 44 | Input/ Output<br><br>Output | Input, pull-up enabled | **Port D GPIO** — These four GPIO pins can be individually programmed as input or output pins.<br><br>**Chip Select** — $\overline{CS4}$ - $\overline{CS7}$ may be programmed within the EMI module to act as chip selects for specific areas of the external memory map.<br><br>Depending upon the state of the DRV bit in the EMI bus control register (BCR), $\overline{CS4}$ - $\overline{CS7}$ are tri-stated when the external bus is inactive<br><br>After reset, these pins are configured as GPIO.<br><br>To deactivate the internal pull-up resistor, clear the appropriate GPIO bit in the GPIOD_PUR register.<br><br>Example: GPIOD2, clear bit 2 in the GPIOD_PUR register. |
| **GPIOD3**<br>**($\overline{CS5}$)** | 45 | | | |
| **GPIOD4**<br>**($\overline{CS6}$)** | 46 | | | |
| **GPIOD5**<br>**($\overline{CS7}$)** | 47 | | | |

## Table 2-2 Signal and Package Information for the 128-Pin LQFP (Continued)

| Signal Name | Pin No. | Type | State During Reset | Signal Description |
|---|---|---|---|---|
| **TXD0**<br><br>**(GPIOE0)** | 7 | Output<br><br>Input/ Output | In reset, output is disabled, pull-up is enabled | **Transmit Data** — SCI0 transmit data output<br><br>**Port E GPIO** — This GPIO pin can be individually programmed as an input or output pin.<br><br>After reset, the default state is SCI output.<br><br>To deactivate the internal pull-up resistor, clear bit 0 in the GPIOE_PUR register. |
| **RXD0**<br><br>**(GPIOE1)** | 8 | Input<br><br>Input/ Output | Input, pull-up enabled | **Receive Data** — SCI0 receive data input<br><br>**Port E GPIO** — This GPIO pin can be individually programmed as an input or output pin.<br><br>After reset, the default state is SCI output.<br><br>To deactivate the internal pull-up resistor, clear bit 1 in the GPIOE_PUR register. |
| **TXD1**<br><br>**(GPIOD6)** | 40 | Output<br><br>Input/ Output | In reset, output is disabled, pull-up is enabled | **Transmit Data** — SCI1 transmit data output<br><br>**Port D GPIO** — This GPIO pin can be individually programmed as an input or output pin.<br><br>After reset, the default state is SCI output.<br><br>To deactivate the internal pull-up resistor, clear bit 6 in the GPIOD_PUR register. |
| **RXD1**<br><br>**(GPIOD7)** | 41 | Input<br><br>Input/ Output | Input, pull-up enabled | **Receive Data** — SCI1 receive data input<br><br>**Port D GPIO** — This GPIO pin can be individually programmed as an input or output pin.<br><br>After reset, the default state is SCI input.<br><br>To deactivate the internal pull-up resistor, clear bit 7 in the GPIOD_PUR register. |
| **TCK** | 115 | Schmitt Input | Input, pulled low internally | **Test Clock Input** — This input pin provides a gated clock to synchronize the test logic and shift serial data to the JTAG/EOnCE port. The pin is connected internally to a pull-down resistor. |

## Table 2-2 Signal and Package Information for the 128-Pin LQFP (Continued)

| Signal Name | Pin No. | Type | State During Reset | Signal Description |
|---|---|---|---|---|
| **TMS** | 116 | Schmitt Input | Input, pulled high internally | **Test Mode Select Input** — This input pin is used to sequence the JTAG TAP controller's state machine. It is sampled on the rising edge of TCK and has an on-chip pull-up resistor.<br><br>To deactivate the internal pull-up resistor, set the JTAG bit in the SIM_PUDR register.<br><br>**Note:** Always tie the TMS pin to $V_{DD}$ through a 2.2K resistor. |
| **TDI** | 117 | Schmitt Input | Input, pulled high internally | **Test Data Input** — This input pin provides a serial input data stream to the JTAG/EOnCE port. It is sampled on the rising edge of TCK and has an on-chip pull-up resistor.<br><br>To deactivate the internal pull-up resistor, set the JTAG bit in the SIM_PUDR register. |
| **TDO** | 118 | Output | In reset, output is disabled, pull-up is enabled | **Test Data Output** — This tri-stateable output pin provides a serial output data stream from the JTAG/EOnCE port. It is driven in the shift-IR and shift-DR controller states, and changes on the falling edge of TCK. |
| **$\overline{\text{TRST}}$** | 114 | Schmitt Input | Input, pulled high internally | **Test Reset** — As an input, a low signal on this pin provides a reset signal to the JTAG TAP controller. To ensure complete hardware reset, $\overline{\text{TRST}}$ should be asserted whenever $\overline{\text{RESET}}$ is asserted. The only exception occurs in a debugging environment when a hardware device reset is required and the JTAG/EOnCE module must not be reset. In this case, assert $\overline{\text{RESET}}$, but do not assert $\overline{\text{TRST}}$.<br><br>To deactivate the internal pull-up resistor, set the JTAG bit in the SIM_PUDR register.<br><br>**Note:** For normal operation, connect $\overline{\text{TRST}}$ directly to $V_{SS}$. If the design is to be used in a debugging environment, $\overline{\text{TRST}}$ may be tied to $V_{SS}$ through a 1K resistor. |

## Table 2-2 Signal and Package Information for the 128-Pin LQFP (Continued)

| Signal Name | Pin No. | Type | State During Reset | Signal Description |
|---|---|---|---|---|
| **PHASEA0**<br><br>**(TA0)**<br><br>**(GPIOC4)** | 127 | Schmitt Input<br><br>Schmitt Input/ Output<br><br>Schmitt Input/ Output | Input, pull-up enabled | **Phase A** — Quadrature Decoder 0, PHASEA input<br><br>**TA0** — Timer A, Channel 0<br><br>**Port C GPIO** — This GPIO pin can be individually programmed as an input or output pin.<br><br>After reset, the default state is PHASEA0.<br><br>To deactivate the internal pull-up resistor, clear bit 4 of the GPIOC_PUR register. |
| **PHASEB0**<br><br>**(TA1)**<br><br>**(GPIOC5)** | 128 | Schmitt Input<br><br>Schmitt Input/ Output<br><br>Schmitt Input/ Output | Input, pull-up enabled | **Phase B** — Quadrature Decoder 0, PHASEB input<br><br>**TA1** — Timer A, Channel 1<br><br>**Port C GPIO** — This GPIO pin can be individually programmed as an input or output pin.<br><br>After reset, the default state is PHASEB0.<br><br>To deactivate the internal pull-up resistor, clear bit 5 of the GPIOC_PUR register. |
| **INDEX0**<br><br>**(TA2)**<br><br>**(GPIOC6)** | 1 | Schmitt Input<br><br>Schmitt Input/ Output<br><br>Schmitt Input/ Output | Input, pull-up enabled | **Index** — Quadrature Decoder 0, INDEX input<br><br>**TA2** — Timer A, Channel 2<br><br>**Port C GPIO** — This GPIO pin can be individually programmed as an input or output pin.<br><br>After reset, the default state is INDEX0.<br><br>To deactivate the internal pull-up resistor, clear bit 6 of the GPIOC_PUR register. |

## Table 2-2 Signal and Package Information for the 128-Pin LQFP (Continued)

| Signal Name | Pin No. | Type | State During Reset | Signal Description |
|---|---|---|---|---|
| **HOME0**<br><br>**(TA3)**<br><br>**(GPIOC7)** | 2 | Schmitt Input<br><br>Schmitt Input/ Output<br><br>Schmitt Input/ Output | Input, pull-up enabled | **Home** — Quadrature Decoder 0, HOME input<br><br>**TA3** — Timer A, Channel 3<br><br>**Port C GPIO** — This GPIO pin can be individually programmed as an input or output pin.<br><br>After reset, the default state is HOME0.<br><br>To deactivate the internal pull-up resistor, clear bit 7 of the GPIOC_PUR register. |
| **SCLK0**<br><br>**(GPIOE4)** | 124 | Schmitt Input/ Output<br><br>Schmitt Input/ Output | Input, pull-up enabled | **SPI 0 Serial Clock** — In the master mode, this pin serves as an output, clocking slaved listeners. In slave mode, this pin serves as the data clock input.<br><br>**Port E GPIO** — This GPIO pin can be individually programmed as an input or output pin.<br><br>After reset, the default state is SCLK0.<br><br>To deactivate the internal pull-up resistor, clear bit 4 in the GPIOE_PUR register. |
| **MOSI0**<br><br>**(GPIOE5)** | 126 | Input/ Output<br><br>Input/ Output | In reset, output is disabled, pull-up is enabled | **SPI 0 Master Out/Slave In** — This serial data pin is an output from a master device and an input to a slave device. The master device places data on the MOSI line a half-cycle before the clock edge the slave device uses to latch the data.<br><br>**Port E GPIO** — This GPIO pin can be individually programmed as an input or output pin.<br><br>After reset, the default state is MOSI0.<br><br>To deactivate the internal pull-up resistor, clear bit 5 in the GPIOE_PUR register. |

## Table 2-2 Signal and Package Information for the 128-Pin LQFP (Continued)

| Signal Name | Pin No. | Type | State During Reset | Signal Description |
|---|---|---|---|---|
| **MISO0**<br><br>**(GPIOE6)** | 125 | Input/ Output<br><br>Input/ Output | Input, pull-up enabled | **SPI 0 Master In/Slave Out** — This serial data pin is an input to a master device and an output from a slave device. The MISO line of a slave device is placed in the high-impedance state if the slave device is not selected. The slave device places data on the MISO line a half-cycle before the clock edge the master device uses to latch the data.<br><br>**Port E GPIO** — This GPIO pin can be individually programmed as an input or output pin.<br><br>After reset, the default state is MISO0.<br><br>To deactivate the internal pull-up resistor, clear bit 6 in the GPIOE_PUR register. |
| **$\overline{\text{SS0}}$**<br><br>**(GPIOE7)** | 123 | Input<br><br>Input/ Output | Input, pull-up enabled | **SPI 0 Slave Select** — $\overline{\text{SS0}}$ is used in slave mode to indicate to the SPI module that the current transfer is to be received.<br><br>**Port E GPIO** — This GPIO pin can be individually programmed as an input or output pin.<br><br>After reset, the default state is $\overline{\text{SS0}}$.<br><br>To deactivate the internal pull-up resistor, clear bit 7 in the GPIOE_PUR register. |
| ***PHASEA1***<br><br>**(*TB0*)**<br><br>**(SCLK1)**<br><br>**(GPIOC0)** | 9 | Schmitt Input<br><br>Schmitt Input/ Output<br><br>Schmitt Input/ Output<br><br>Schmitt Input/ Output | Input, pull-up enabled | **Phase A1** — Quadrature Decoder 1, PHASEA input for decoder 1.<br><br>**TB0** — Timer B, Channel 0<br><br>**SPI 1 Serial Clock** — In the master mode, this pin serves as an output, clocking slaved listeners. In slave mode, this pin serves as the data clock input. To activate the SPI function, set the PHSA_ALT bit in the SIM_GPS register. For details, see **Part 6.5.8**.<br><br>**Port C GPIO** — This GPIO pin can be individually programmed as an input or output pin.<br><br>In the 56F8365, the default state after reset is PHASEA1.<br><br>In the 56F8165, the default state is not one of the functions offered and must be reconfigured.<br><br>To deactivate the internal pull-up resistor, clear bit 0 in the GPIOC_PUR register. |

## Table 2-2 Signal and Package Information for the 128-Pin LQFP (Continued)

| Signal Name | Pin No. | Type | State During Reset | Signal Description |
|---|---|---|---|---|
| ***PHASEB1*** | 10 | Schmitt Input | Input, pull-up enabled | **Phase B1** — Quadrature Decoder 1, PHASEB input for decoder 1. |
| **(*TB1*)** | | Schmitt Input/ Output | | **TB1** — Timer B, Channel 1 |
| **(MOSI1)** | | Schmitt Input/ Output | | **SPI 1 Master Out/Slave In** — This serial data pin is an output from a master device and an input to a slave device. The master device places data on the MOSI line a half-cycle before the clock edge the slave device uses to latch the data. To activate the SPI function, set the PHSB_ALT bit in the SIM_GPS register. For details, see **Part 6.5.8**. |
| **(GPIOC1)** | | Schmitt Input/ Output | | **Port C GPIO** — This GPIO pin can be individually programmed as an input or output pin.<br><br>In the 56F8365, the default state after reset is PHASEB1.<br><br>In the 56F8165, the default state is not one of the functions offered and must be reconfigured.<br><br>To deactivate the internal pull-up resistor, clear bit 1 in the GPIOC_PUR register. |

## Table 2-2 Signal and Package Information for the 128-Pin LQFP (Continued)

| Signal Name | Pin No. | Type | State During Reset | Signal Description |
|---|---|---|---|---|
| ***INDEX1*** | 11 | Schmitt Input | Input, pull-up enabled | **Index1** — Quadrature Decoder 1, INDEX input |
| **(*TB2*)** | | Schmitt Input/ Output | | **TB2** — Timer B, Channel 2 |
| **(MISO1)** | | Schmitt Input/ Output | | **SPI 1 Master In/Slave Out** — This serial data pin is an input to a master device and output from a slave device. The MISO line of a slave device is placed in the high-impedance state if the slave device is not selected. The slave device places data on the MISO line a half-cycle before the clock edge the master device uses to latch the data. To activate the SPI function, set the INDEX_ALT bit in the SIM_GPS register. See **Part 6.5.8** for details. |
| **(GPIOC2)** | | Schmitt Input/ Output | | **Port C GPIO** — This GPIO pin can be individually programmed as an input or output pin.<br><br>In the 56F8365, the default state after reset is INDEX1.<br><br>In the 56F8165, the default state is not one of the functions offered and must be reconfigured.<br><br>To deactivate the internal pull-up resistor, clear bit 2 in the GPIOC_PUR register. |
| ***HOME1*** | 12 | Schmitt Input | Input, pull-up enabled | **Home** — Quadrature Decoder 1, HOME input |
| **(*TB3*)** | | Schmitt Input/ Output | | **TB3** — Timer B, Channel 3 |
| **($\overline{\text{SS1}}$)** | | Schmitt Input | | **SPI 1 Slave Select** — In the master mode, this pin is used to arbitrate multiple masters. In slave mode, this pin is used to select the slave. To activate the SPI function, set the HOME_ALT bit in the SIM_GPS register. See **Part 6.5.8** for details. |
| **(GPIOC3)** | | Schmitt Input/ Output | | **Port C GPIO** — This GPIO pin can be individually programmed as input or output pin.<br><br>In the 56F8365, the default state after reset is HOME1.<br><br>In the 56F8165, the default state is not one of the functions offered and must be reconfigured.<br><br>To deactivate the internal pull-up resistor, clear bit 3 in the GPIOC_PUR register. |

## Table 2-2 Signal and Package Information for the 128-Pin LQFP (Continued)

| Signal Name | Pin No. | Type | State During Reset | Signal Description |
|---|---|---|---|---|
| ***PWMA0*** | 58 | Output | In reset, output is disabled | **PWMA0 - 5** — These are six PWMA output pins. |
| ***PWMA1*** | 60 | | | |
| ***PWMA2*** | 61 | | | |
| ***PWMA3*** | 63 | | | |
| ***PWMA4*** | 64 | | | |
| ***PWMA5*** | 66 | | | |
| ***ISA0*** **(GPIOC8)** | 104 | Schmitt Input<br><br>Schmitt Input/ Output | Input, pull-up enabled | **ISA0 - 2** — These three input current status pins are used for top/bottom pulse width correction in complementary channel operation for PWMA.<br><br>**Port C GPIO** — These GPIO pins can be individually programmed as input or output pins.<br><br>In the 56F8365, these pins default to ISA functionality.<br><br>In the 56F8165, the default state is not one of the functions offered and must be reconfigured.<br><br>To deactivate the internal pull-up resistor, clear the appropriate bit of the GPIOC_PUR register. See **Part 6.5.6** for details. |
| ***ISA1*** **(GPIOC9)** | 105 | | | |
| ***ISA2*** **(GPIOC10)** | 106 | | | |
| ***FAULTA0*** | 67 | Schmitt Input | Input, pull-up enabled | **FAULTA0 - 2** — These three fault input pins are used for disabling selected PWMA outputs in cases where fault conditions originate off-chip.<br><br>To deactivate the internal pull-up resistor, set the PWMA0 bit in the SIM_PUDR register. See **Part 6.5.6** for details. |
| ***FAULTA1*** | 68 | | | |
| ***FAULTA2*** | 69 | | | |
| ***FAULTA3*** | 70 | Schmitt Input | Input, pull-up enabled | **FAULTA3** — This fault input pin is used for disabling selected PWMA outputs in cases where fault conditions originate off-chip.<br><br>To deactivate the internal pull-up resistor, set the PWMA1 bit in the SIM_PUDR register. See **Part 6.5.6** for details. |

## Table 2-2 Signal and Package Information for the 128-Pin LQFP (Continued)

| Signal Name | Pin No. | Type | State During Reset | Signal Description |
|---|---|---|---|---|
| **PWMB0** | 32 | Output | In reset, output is disabled | **PWMB0 - 5** — Six PWMB output pins. |
| **PWMB1** | 33 | | | |
| **PWMB2** | 34 | | | |
| **PWMB3** | 37 | | | |
| **PWMB4** | 38 | | | |
| **PWMB5** | 39 | | | |
| **ISB0**<br><br>**(GPIOD10)** | 48 | Schmitt Input<br><br>Schmitt Input/ Output | Input, pull-up enabled | **ISB0 - 2** — These three input current status pins are used for top/bottom pulse width correction in complementary channel operation for PWMB.<br><br>**Port D GPIO** — These GPIO pins can be individually programmed as input or output pins.<br><br>At reset, these pins default to ISA functionality.<br><br>Deactivate pull-up by setting the approproate bit of the GPIOD_PUR register. See **Part 6.5.6** for details. |
| **ISB1 (GPIOD11)** | 50 | | | |
| **ISB2 (GPIOD12)** | 51 | | | |
| **FAULTB0** | 54 | Schmitt Input | Input, pull-up enabled | **FAULTB0 - 3** — These four fault input pins are used for disabling selected PWMB outputs in cases where fault conditions originate off-chip.<br><br>To deactivate the internal pull-up resistor, set the PWMB bit in the SIM_PUDR register. See **Part 6.5.6** for details. |
| **FAULTB1** | 55 | | | |
| **FAULTB2** | 56 | | | |
| **FAULTB3** | 57 | | | |
| **ANA0** | 80 | Input | Analog Input | **ANA0 - 3** — Analog inputs to ADC A, channel 0 |
| **ANA1** | 81 | | | |
| **ANA2** | 82 | | | |
| **ANA3** | 83 | | | |
| **ANA4** | 84 | Input | Analog Input | **ANA4 - 7** — Analog inputs to ADC A, channel 1 |
| **ANA5** | 85 | | | |
| **ANA6** | 86 | | | |
| **ANA7** | 87 | | | |
| **$V_{REFH}$** | 93 | Input | Analog Input | **$V_{REFH}$** — Analog Reference Voltage High. $V_{REFH}$ must be less than or equal to $V_{DDA_ADC}$. |

## Table 2-2 Signal and Package Information for the 128-Pin LQFP (Continued)

| Signal Name | Pin No. | Type | State During Reset | Signal Description |
|---|---|---|---|---|
| $V_{REFP}$ | 92 | Input/ Output | Analog Input/ Output | **$V_{REFP}$, $V_{REFMID}$ & $V_{REFN}$** — Internal pins for voltage reference which are brought off-chip so that they can be bypassed. Connect to a 0.1 μF low ESR capacitor. |
| $V_{REFMID}$ | 91 | | | |
| $V_{REFN}$ | 90 | | | |
| $V_{REFLO}$ | 89 | Input | Analog Input | **$V_{REFLO}$** — Analog Reference Voltage Low. This should normally be connected to a low-noise $V_{SSA}$. |
| **ANB0** | 96 | Input | Analog Input | **ANB0 - 3** — Analog inputs to ADC B, channel 0 |
| **ANB1** | 97 | | | |
| **ANB2** | 98 | | | |
| **ANB3** | 99 | | | |
| **ANB4** | 100 | Input | Analog Input | **ANB4 - 7** — Analog inputs to ADC B, channel 1 |
| **ANB5** | 101 | | | |
| **ANB6** | 102 | | | |
| **ANB7** | 103 | | | |
| ***TEMP_ SENSE*** | 88 | Output | Analog Output | **Temp Sense Diode** — This signal connects to an on-chip diode that can be connected to one of the ADC inputs and is used to monitor the temperature of the die. Must be bypassed with a 0.01 μF capacitor. |
| ***CAN_RX*** | 121 | Schmitt Input | Input, pull-up enabled | **FlexCAN Receive Data** — This is the CAN input. This pin has an internal pull-up resistor.<br><br>To deactivate the internal pull-up resistor, set the CAN bit in the SIM_PUDR register. |
| ***CAN_TX*** | 120 | Open Drain Output | Open Drain Output | **FlexCAN Transmit Data** — CAN output with internal pull-up enable at reset.*<br><br>* **Note**: If a pin is configured as open drain output mode, internal pull-up will automatically be disabled when it outputs low. Internal pull-up will be enabled unless it has been manually disabled by clearing the corresponding bit in the PUREN register of the GPIO module, when it outputs high.<br><br>If a pin is configured as push-pull output mode, internal pull-up will automatically be disabled, whether it outputs low or high. |

## Table 2-2 Signal and Package Information for the 128-Pin LQFP (Continued)

| Signal Name | Pin No. | Type | State During Reset | Signal Description |
|---|---|---|---|---|
| **TC0**<br><br>**(GPIOE8)** | 111 | Schmitt Input/ Output<br><br>Schmitt Input/ Output | Input, pull-up enabled | **TC0 - 1** — Timer C, Channels 0 and 1<br><br>**Port E GPIO** — These GPIO pins can be individually programmed as input or output pins.<br><br>At reset, these pins default to Timer functionality.<br><br>To deactivate the internal pull-up resistor, clear the appropriate bit of the GPIOE_PUR register. See **Part 6.5.6** for details. |
| **TC1**<br>**(GPIOE9)** | 113 | | | |
| ***TD0***<br><br>**(GPIOE10)** | 107 | Schmitt Input/ Output<br><br>Schmitt Input/ Output | Input, pull-up enabled | **TD0 - TD3** — Timer D, Channels 0, 1, 2 and 3<br><br>**Port E GPIO** — These GPIO pins can be individually programmed as input or output pins.<br><br>At reset, these pins default to Timer functionality.<br><br>To deactivate the internal pull-up resistor, clear the appropriate bit of the GPIOE_PUR register. See **Part 6.5.6** for details. |
| ***TD1***<br>**(GPIOE11)** | 108 | | | |
| ***TD2***<br>**(GPIOE12)** | 109 | | | |
| ***TD3***<br>**(GPIOE13)** | 110 | | | |
| **$\overline{\text{IRQA}}$** | 52 | Schmitt Input | Input, pull-up enabled | **External Interrupt Request A and B** — The $\overline{\text{IRQA}}$ and $\overline{\text{IRQB}}$ inputs are asynchronous external interrupt requests during Stop and Wait mode operation. During other operating modes, they are synchronized external interrupt requests, which indicate an external device is requesting service. They can be programmed to be level-sensitive or negative-edge triggered.<br><br>To deactivate the internal pull-up resistor, set the IRQ bit in the SIM_PUDR register. See **Part 6.5.6** for details. |
| **$\overline{\text{IRQB}}$** | 53 | | | |

## Table 2-2 Signal and Package Information for the 128-Pin LQFP (Continued)

| Signal Name | Pin No. | Type | State During Reset | Signal Description |
|---|---|---|---|---|
| **$\overline{\text{RESET}}$** | 78 | Schmitt Input | Input, pull-up enabled | **Reset** — This input is a direct hardware reset on the processor. When $\overline{\text{RESET}}$ is asserted low, the device is initialized and placed in the reset state. A Schmitt trigger input is used for noise immunity. The internal reset signal will be deasserted synchronous with the internal clocks after a fixed number of internal clocks.<br><br>To ensure complete hardware reset, $\overline{\text{RESET}}$ and $\overline{\text{TRST}}$ should be asserted together. The only exception occurs in a debugging environment when a hardware device reset is required and the JTAG/EOnCE module must not be reset. In this case, assert $\overline{\text{RESET}}$, but do not assert $\overline{\text{TRST}}$.<br><br>**Note:** The internal Power-On Reset will assert on initial power-up.<br><br>To deactivate the internal pull-up resistor, set the $\overline{\text{RESET}}$ bit in the SIM_PUDR register. See **Part 6.5.6**. for details. |
| **$\overline{\text{RSTO}}$** | 77 | Output | Output | **Reset Output** — This output reflects the internal reset state of the chip. |
| **EXTBOOT** | Internal Ground | Schmitt Input | Input, pull-up enabled | **External Boot** —This input is tied to $V_{DD}$ to force the device to boot from off-chip memory (assuming that the on-chip Flash memory is not in a secure state). Otherwise, it is tied to ground. For details, see **Table 4-4**.<br><br>**Note:** When this pin is tied low, the customer boot software should disable the internal pull-up resistor by setting the XBOOT bit of the SIM_PUDR; see **Part 6.5.6**.<br><br>***Note**: This pin is internally tied low (to $V_{SS}$).* |
| **EMI_MODE** | Internal Ground | Schmitt Input | Input, pull-up enabled | **External Memory Mode** — This device will boot from internal Flash memory under normal operation.<br>This function is also affected by EXTBOOT and the Flash security mode; see **Table 4-4** for details.<br><br>**Note:** When this pin is tied low, the customer boot software should disable the internal pull-up resistor by setting the EMI_MODE bit of the SIM_PUDR; see **Part 6.5.6**.<br><br>***Note:** This pin is internally tied low (to $V_{SS}$).* |

# Part 3 On-Chip Clock Synthesis (OCCS)

## 3.1 Introduction

Refer to the OCCS chapter of the **56F8300 Peripheral User Manual** for a full description of the OCCS. The material contained here identifies the specific features of the OCCS design. **Figure 3-1** shows the specific OCCS block diagram to reference in the OCCS chapter of the **56F8300 Peripheral User Manual**.

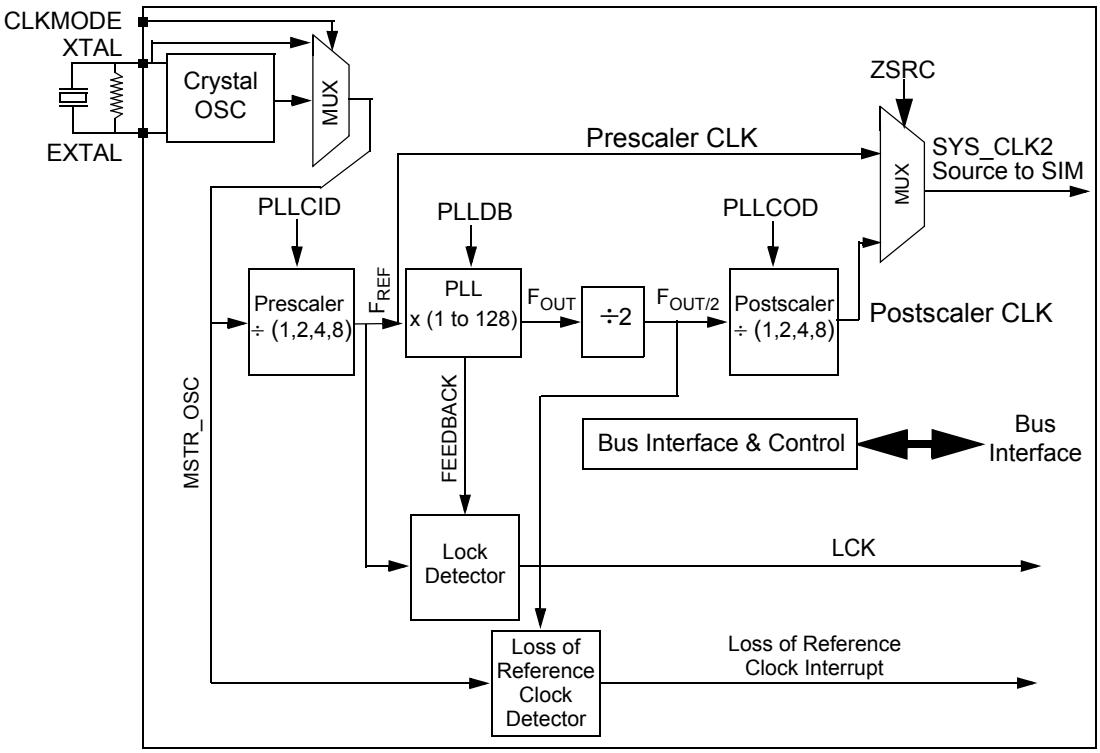


**Figure 3-1 OCCS Block Diagram**

## 3.2 External Clock Operation

The system clock can be derived from an external crystal, ceramic resonator, or an external system clock signal. To generate a reference frequency using the internal oscillator, a reference crystal or ceramic resonator must be connected between the EXTAL and XTAL pins.

### 3.2.1 Crystal Oscillator

The internal oscillator is designed to interface with a parallel-resonant crystal resonator in the frequency range specified for the external crystal in **Table 10-15**. A recommended crystal oscillator circuit is shown in **Figure 3-2**. Follow the crystal supplier's recommendations when selecting a crystal, since crystal parameters determine the component values required to provide maximum stability and reliable start-up.

The crystal and associated components should be mounted as near as possible to the EXTAL and XTAL pins to minimize output distortion and start-up stabilization time.

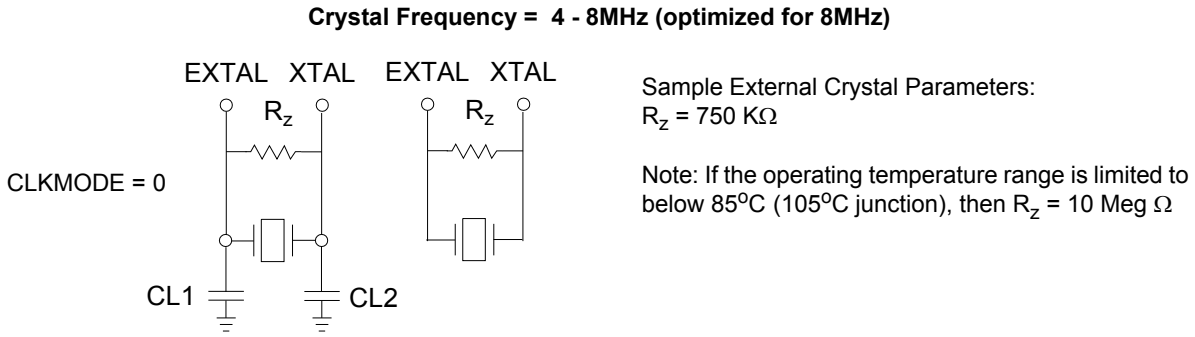


**Figure 3-2 Connecting to a Crystal Oscillator**

**Note:** The OCCS_COHL bit must be set to 1 when a crystal oscillator is used. The reset condition on the OCCS_COHL bit is 0. Please see the COHL bit in the Oscillator Control (OSCTL) register, discussed in the **56F8300 Peripheral User Manual**.

## 3.2.2 Ceramic Resonator (Default)

It is also possible to drive the internal oscillator with a ceramic resonator, assuming the overall system design can tolerate the reduced signal integrity. A typical ceramic resonator circuit is shown in **Figure 3-3**. Refer to the supplier's recommendations when selecting a ceramic resonator and associated components. The resonator and components should be mounted as near as possible to the EXTAL and XTAL pins.

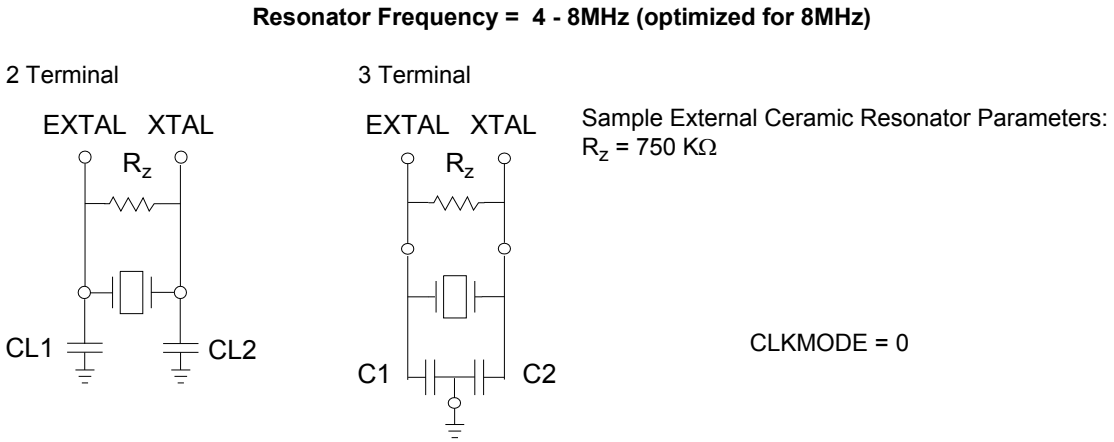


**Figure 3-3 Connecting a Ceramic Resonator**

**Note:** The OCCS_COHL bit must be set to 0 when a ceramic resonator is used. The reset condition on the OCCS_COHL bit is 0. Please see the COHL bit in the Oscillator Control (OSCTL) register, discussed in the **56F8300 Peripheral User Manual**.

### 3.2.3 External Clock Source

The recommended method of connecting an external clock is illustrated in **Figure 3-4**. The external clock source is connected to XTAL and the EXTAL pin is grounded. Set OCCS_COHL bit high when using an external clock source as well.

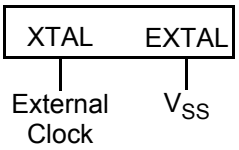


Note: When using an external clocking source with this configuration, the input "CLKMODE" should be high and the COHL bit in the OSCTL register should be set to 1.

**Figure 3-4 Connecting an External Clock Signal Register**

## 3.3 Registers

When referring to the register definitions for the OCCS in the **56F8300 Peripheral User Manual**, use the register definitions **without** the internal Relaxation Oscillator, since the 56F8365/56F8165 devices do NOT contain this oscillator.

# Part 4 Memory Map

## 4.1 Introduction

The 56F8365 and 56F8165 devices are 16-bit motor-control chips based on the 56800E core. These parts use a Harvard-style architecture with two independent memory spaces for Data and Program. On-chip RAM and Flash memories are used in both spaces.

This section provides memory maps for:

- Program Address Space, including the Interrupt Vector Table
- Data Address Space, including the EOnCE Memory and Peripheral Memory Maps

On-chip memory sizes for each device are summarized in **Table 4-1.** Flash memories' restrictions are identified in the "Use Restrictions" column of **Table 4-1.**

**Note:** *Data Flash and Program RAM are NOT available on the 56F8165 device.*

**Table 4-1 Chip Memory Configurations**

| On-Chip Memory | 56F8365 | 56F8165 | Use Restrictions |
|---|---|---|---|
| Program Flash | 512KB | 512KB | Erase/Program via Flash interface unit and word writes to CDBW |

**Table 4-1 Chip Memory Configurations**

| On-Chip Memory | 56F8365 | 56F8165 | Use Restrictions |
|---|---|---|---|
| *Data Flash* | 32KB | — | Erase/Program via Flash interface unit and word writes to CDBW. Data Flash can be read via either CDBR or XDB2, but not by both simultaneously |
| *Program RAM* | 4KB | — | None |
| Data RAM | 32KB | 32KB | None |
| Program Boot Flash | 32KB | 32KB | Erase/Program via Flash Interface unit and word writes to CDBW |

## 4.2 Program Map

The Program memory map is located in **Table 4-4.** The operating mode control bits (MA and MB) in the Operating Mode Register (OMR) control the Program memory map. At reset, these bits are set as indicated in **Table 4-2**.

EXT_BOOT = EMI_MODE = 0 and cannot be changed in the 56F8365 or 56F8165.

**Note:** *Program RAM is NOT available on the 56F8165 device.*

**Table 4-2 OMR MB/MA Value at Reset[1]**

| OMR MB = Flash Secured State[2,3] | OMR MA = EXTBOOT Pin | Chip Operating Mode |
|---|---|---|
| 0 | 0 | Mode 0 – Internal Boot; EMI is configured to use 16 address lines; Flash Memory is secured; external P-space is not allowed; the EOnCE is disabled |
| 0 | 1 | Not valid; cannot boot externally if the Flash is secured and will actually configure to 00 state |
| 1 | 0 | Mode 0 – Internal Boot; EMI is configured to use 16 address lines |
| 1 | 1 | Mode 1 – External Boot; Flash Memory is not secured; EMI configuration is determined by the state of the EMI_MODE pin |

1. Information in shaded areas not applicable to 56F8365/56F8165.
2. This bit is only configured at reset. If the Flash secured state changes, this will not be reflected in MB until the next reset.
3. Changing MB in software will not affect Flash memory security.

After reset, the OMR MA bit can be changed and will have an effect on the P-space memory map, as shown in **Table 4-3**. Changing the OMR MB bit will have no effect.

## Table 4-3 Changing OMR MA Value During Normal Operation

| OMR MA | Chip Operating Mode |
|---|---|
| 0 | Use internal P-space memory map configuration |
| 1[1] | Use external P-space memory map configuration – If MB = 0 at reset, changing this bit has no effect. |

1. Setting this bit can cause unpredictable results and is not recommended, since the EMI is not functional in this package.

**Table 4-4** shows the memory map options of the 56F8365/56F8165. The two right columns cannot be used, since the EMI pins are not provided in the package; therefore, only the Mode 0 column is relevant.

**Note:** *Program RAM is NOT available on the 56F8165 device.*

## Table 4-4 Program Memory Map at Reset

<table>
<tr><th rowspan="3">Begin/End Address</th><th>Mode 0 (MA = 0)</th><th colspan="2">Mode 1[1] (MA = 1)</th></tr>
<tr><th>Internal Boot</th><th colspan="2">External Boot</th></tr>
<tr><th>Internal Boot<br>16-Bit External Address Bus</th><th>EMI_MODE = 0[2, 3]<br>16-Bit External Address Bus</th><th>EMI_MODE = 1[4]<br>20-Bit External Address Bus</th></tr>
<tr><td>P:$1F FFFF<br>P:$10 0000</td><td rowspan="2">External Program Memory[5]</td><td rowspan="2">External Program Memory[6]</td><td>External Program Memory</td></tr>
<tr><td>P:$0F FFFF<br>P:$05 0000</td><td rowspan="7">External Program Memory<br>COP Reset Address = 04 0002<br>Boot Location = 04 0000</td></tr>
<tr><td>P:$04 FFFF<br>P:$04 F800</td><td>On-Chip Program RAM<br>4KB</td><td>On-Chip Program RAM<br>4KB</td></tr>
<tr><td>P:$04 F7FF<br>P:$04 4000</td><td colspan="2">Reserved<br>92KB</td></tr>
<tr><td>P:$04 3FFF<br>P:$04 0000</td><td>Boot Flash<br>32KB<br>COP Reset Address = 04 0002<br>Boot Location = 04 0000</td><td>Boot Flash<br>32KB<br>(Not Used for Boot in this Mode)</td></tr>
<tr><td>P:$03 FFFF<br>P:$02 0000</td><td>Internal Program Flash[7]<br>256KB</td><td>Internal Program Flash<br>256KB</td></tr>
<tr><td>P:$01 FFFF<br>P:$01 0000</td><td rowspan="2">Internal Program Flash[7]<br>256KB</td><td>Internal Program Flash<br>128KB</td></tr>
<tr><td>P:$00 FFFF<br>P:$00 0000</td><td>External Program Memory<br>COP Reset Address = 00 0002<br>Boot Location = 00 0000</td></tr>
</table>

1. Cannot be used since MA = EXTBOOT = 0 and the EMI is not available; information in shaded areas not applicable to 56F8365/56F8165.
2. This mode provides maximum compatibility with 56F80x parts while operating externally.
3. “EMI_MODE = 0”, EMI_MODE pin is tied to ground at boot up.
4. “EMI_MODE = 1”, EMI_MODE pin is tied to $V_{DD}$ at boot up.

5. Not accessible in reset configuration, since the address is above P:$00 FFFF. The higher bit address/GPIO (and/or chip selects) pins must be reconfigured before this external memory is accessible.
6. Not accessible in this part, since the EMI is not fully pinned out in this package; information in shaded areas not applicable to 56F8365/56F8165.
7. Two independent program flash blocks allow one to be programmed/erased while executing from another. Each block must have its own mass erase.

## 4.3 Interrupt Vector Table

**Table 4-5** provides the reset and interrupt priority structure, including on-chip peripherals. The table is organized with higher-priority vectors at the top and lower-priority interrupts lower in the table. The priority of an interrupt can be assigned to different levels, as indicated, allowing some control over interrupt priorities. All level 3 interrupts will be serviced before level 2, and so on. For a selected priority level, the lowest vector number has the highest priority.

The location of the vector table is determined by the Vector Base Address (VBA) register. Please see **Part 5.6.11** for the reset value of the VBA.

In some configurations, the reset address and COP reset address will correspond to vector 0 and 1 of the interrupt vector table. In these instances, the first two locations in the vector table must contain branch or JMP instructions. All other entries must contain JSR instructions.

**Note:** *PWMA, FlexCAN, Quadrature Decoder 1, and Quad Timers B and D are NOT available on the 56F8165 device.*

**Table 4-5 Interrupt Vector Table Contents[1]**

| Peripheral | Vector Number | Priority Level | Vector Base Address + | Interrupt Function |
|---|---|---|---|---|
| | | | | Reserved for Reset Overlay[2] |
| | | | | Reserved for COP Reset Overlay[2] |
| core | 2 | 3 | P:$04 | Illegal Instruction |
| core | 3 | 3 | P:$06 | SW Interrupt 3 |
| core | 4 | 3 | P:$08 | HW Stack Overflow |
| core | 5 | 3 | P:$0A | Misaligned Long Word Access |
| core | 6 | 1-3 | P:$0C | OnCE Step Counter |
| core | 7 | 1-3 | P:$0E | OnCE Breakpoint Unit 0 |
| | | | | Reserved |
| core | 9 | 1-3 | P:$12 | OnCE Trace Buffer |
| core | 10 | 1-3 | P:$14 | OnCE Transmit Register Empty |
| core | 11 | 1-3 | P:$16 | OnCE Receive Register Full |
| | | | | Reserved |

## Table 4-5 Interrupt Vector Table Contents[1] (Continued)

| Peripheral | Vector Number | Priority Level | Vector Base Address + | Interrupt Function |
|---|---|---|---|---|
| core | 14 | 2 | P:$1C | SW Interrupt 2 |
| core | 15 | 1 | P:$1E | SW Interrupt 1 |
| core | 16 | 0 | P:$20 | SW Interrupt 0 |
| core | 17 | 0-2 | P:$22 | IRQA |
| core | 18 | 0-2 | P:$24 | IRQB |
| | | | | Reserved |
| LVI | 20 | 0-2 | P:$28 | Low-Voltage Detector (power sense) |
| PLL | 21 | 0-2 | P:$2A | PLL |
| FM | 22 | 0-2 | P:$2C | FM Access Error Interrupt |
| FM | 23 | 0-2 | P:$2E | FM Command Complete |
| FM | 24 | 0-2 | P:$30 | FM Command, data and address Buffers Empty |
| | | | | Reserved |
| *FLEXCAN* | 26 | 0-2 | P:$34 | FLEXCAN Bus Off |
| *FLEXCAN* | 27 | 0-2 | P:$36 | FLEXCAN Error |
| *FLEXCAN* | 28 | 0-2 | P:$38 | FLEXCAN Wake Up |
| *FLEXCAN* | 29 | 0-2 | P:$3A | FLEXCAN Message Buffer Interrupt |
| GPIOF | 30 | 0-2 | P:$3C | GPIO F |
| GPIOE | 31 | 0-2 | P:$3E | GPIO E |
| GPIOD | 32 | 0-2 | P:$40 | GPIO D |
| GPIOC | 33 | 0-2 | P:$42 | GPIO C |
| GPIOB | 34 | 0-2 | P:$44 | GPIO B |
| GPIOA | 35 | 0-2 | P:$46 | GPIO A |
| | | | | Reserved |
| SPI1 | 38 | 0-2 | P:$4C | SPI 1 Receiver Full |
| SPI1 | 39 | 0-2 | P:$4E | SPI 1 Transmitter Empty |
| SPI0 | 40 | 0-2 | P:$50 | SPI 0 Receiver Full |
| SPI0 | 41 | 0-2 | P:$52 | SPI 0 Transmitter Empty |
| SCI1 | 42 | 0-2 | P:$54 | SCI 1 Transmitter Empty |
| SCI1 | 43 | 0-2 | P:$56 | SCI 1 Transmitter Idle |
| | | | | Reserved |
| SCI1 | 45 | 0-2 | P:$5A | SCI 1 Receiver Error |
| SCI1 | 46 | 0-2 | P:$5C | SCI 1 Receiver Full |

## Table 4-5 Interrupt Vector Table Contents[1] (Continued)

| Peripheral | Vector Number | Priority Level | Vector Base Address + | Interrupt Function |
|---|---|---|---|---|
| *DEC1* | 47 | 0-2 | P:$5E | Quadrature Decoder #1 Home Switch or Watchdog |
| *DEC1* | 48 | 0-2 | P:$60 | Quadrature Decoder #1 INDEX Pulse |
| DEC0 | 49 | 0-2 | P:$62 | Quadrature Decoder #0 Home Switch or Watchdog |
| DEC0 | 50 | 0-2 | P:$64 | Quadrature Decoder #0 INDEX Pulse |
| | | | | Reserved |
| *TMRD* | 52 | 0-2 | P:$68 | Timer D, Channel 0 |
| *TMRD* | 53 | 0-2 | P:$6A | Timer D, Channel 1 |
| *TMRD* | 54 | 0-2 | P:$6C | Timer D, Channel 2 |
| *TMRD* | 55 | 0-2 | P:$6E | Timer D, Channel 3 |
| TMRC | 56 | 0-2 | P:$70 | Timer C, Channel 0 |
| TMRC | 57 | 0-2 | P:$72 | Timer C, Channel 1 |
| TMRC | 58 | 0-2 | P:$74 | Timer C, Channel 2 |
| TMRC | 59 | 0-2 | P:$76 | Timer C, Channel 3 |
| *TMRB* | 60 | 0-2 | P:$78 | Timer B, Channel 0 |
| *TMRB* | 61 | 0-2 | P:$7A | Timer B, Channel 1 |
| *TMRB* | 62 | 0-2 | P:$7C | Timer B, Channel 2 |
| *TMRB* | 63 | 0-2 | P:$7E | Timer B, Channel 3 |
| TMRA | 64 | 0-2 | P:$80 | Timer A, Channel 0 |
| TMRA | 65 | 0-2 | P:$82 | Timer A, Channel 1 |
| TMRA | 66 | 0-2 | P:$84 | Timer A, Channel 2 |
| TMRA | 67 | 0-2 | P:$86 | Timer A, Channel 3 |
| SCI0 | 68 | 0-2 | P:$88 | SCI 0 Transmitter Empty |
| SCI0 | 69 | 0-2 | P:$8A | SCI 0 Transmitter Idle |
| | | | | Reserved |
| SCI0 | 71 | 0-2 | P:$8E | SCI 0 Receiver Error |
| SCI0 | 72 | 0-2 | P:$90 | SCI 0 Receiver Full |
| ADCB | 73 | 0-2 | P:$92 | ADC B Conversion Compete / End of Scan |
| ADCA | 74 | 0-2 | P:$94 | ADC A Conversion Complete / End of Scan |
| ADCB | 75 | 0-2 | P:$96 | ADC B Zero Crossing or Limit Error |
| ADCA | 76 | 0-2 | P:$98 | ADC A Zero Crossing or Limit Error |
| PWMB | 77 | 0-2 | P:$9A | Reload PWM B |
| *PWMA* | 78 | 0-2 | P:$9C | Reload PWM A |

**Table 4-5 Interrupt Vector Table Contents[1] (Continued)**

| Peripheral | Vector Number | Priority Level | Vector Base Address + | Interrupt Function |
|---|---|---|---|---|
| PWMB | 79 | 0-2 | P:$9E | PWM B Fault |
| *PWMA* | 80 | 0-2 | P:$A0 | PWM A Fault |
| core | 81 | - 1 | P:$A2 | SW Interrupt LP |
| *FLEXCAN2* | 82 | 0-2 | P:$A4 | FlexCAN Bus-Off |
| *FLEXCAN2* | 83 | 0-2 | P:$A6 | FlexCAN Error |
| *FLEXCAN2* | 84 | 0-2 | P:$A8 | FlexCAN Wake Up |
| *FLEXCAN2* | 85 | 0-2 | P:$AA | FlexCAN Message Buffer Interrupt |

1. Two words are allocated for each entry in the vector table. This does not allow the full address range to be referenced from the vector table, providing only 19 bits of address.
2. If the VBA is set to $0400 (or VBA = 0000 for Mode 1, EMI_MODE = 0), the first two locations of the vector table are the chip reset addresses; therefore, these locations are not interrupt vectors.

## 4.4 Data Map

**Note:** *Data Flash is NOT available on the 56F8165 device.*

**Table 4-6 Data Memory Map[1, 2]**

| Begin/End Address | EX = 0[3] | EX = 1[4] |
|---|---|---|
| X:$FF FFFF<br>X:$FF FF00 | EOnCE<br>256 locations allocated | EOnCE<br>256 locations allocated |
| X:$FF FEFF<br>X:$01 0000 | External Memory | External Memory |
| X:$00 FFFF<br>X:$00 F000 | On-Chip Peripherals<br>4096 locations allocated | On-Chip Peripherals<br>4096 locations allocated |
| X:$00 EFFF<br>X:$00 8000 | External Memory | External Memory |
| X:$00 7FFF<br>X:$00 4000 | *On-Chip Data Flash*<br>32KB | |
| X:$003FFF<br>X:$00 0000 | On-Chip Data RAM<br>32KB[5] | |

1. Information in shaded areas not applicable to 56F8365/56F8165.
2. All addresses are 16-bit Word addresses, not byte addresses.
3. In the Operating Mode Register
4. Setting EX = 1 is not recommended in the 56F8365/56F8165, since the EMI is not functional in this package.
5. The Data RAM is organized as an 8K x 32-bit memory to allow single-cycle, long-word operations.

## 4.5 Flash Memory Map

**Figure 4-1** illustrates the Flash Memory (FM) map on the system bus.

The Flash Memory is divided into three functional blocks. The Program and boot memories reside on the Program Memory buses. They are controlled by one set of banked registers. Data Memory Flash resides on the Data Memory buses and is controlled separately by its own set of banked registers.

The top nine words of the Program Memory Flash are treated as special memory locations. The content of these words is used to control the operation of the Flash Controller. Because these words are part of the Flash Memory content, their state is maintained during power-down and reset. During chip initialization, the content of these memory locations is loaded into Flash Memory control registers, detailed in the Flash Memory chapter of the **56F8300 Peripheral User Manual**. In the 56F8365, these configuration parameters are located between $03_FFF7 and $03_FFFF.

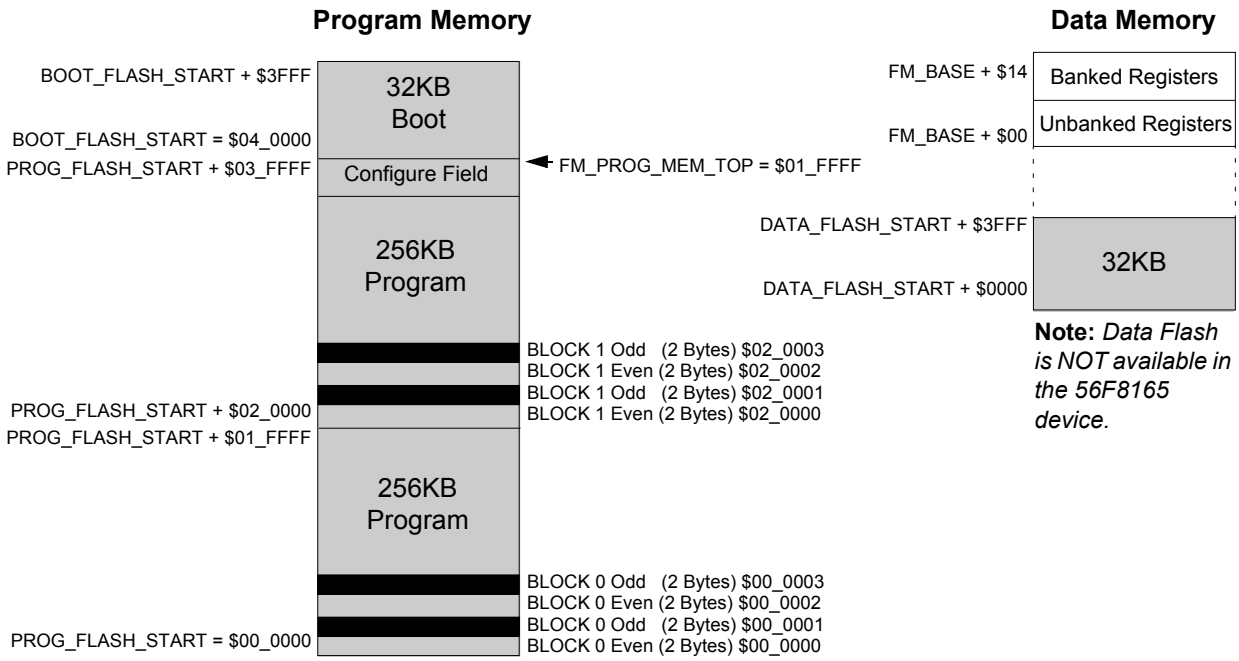


**Figure 4-1 Flash Array Memory Maps**

**Table 4-7** shows the page and sector sizes used within each Flash memory block on the chip.

**Note:** *Data Flash is NOT available on the 56F8165 device.*

**Table 4-7. Flash Memory Partitions**

| | Flash Size | Sectors | Sector Size | Page Size |
|---|---|---|---|---|
| Program Flash | 512KB | 16 | 16K x 16 bits | 1024x 16 bits |
| *Data Flash* | 32KB | 16 | 1024 x 16 bits | 256 x 16 bits |
| Boot Flash | 32KB | 4 | 4K x 16 bits | 512 x 16 bits |

Please see the **56F8300 Peripheral User Manual** for additional Flash information.

## 4.6 EOnCE Memory Map

**Table 4-8 EOnCE Memory Map**

| Address | Register Acronym | Register Name |
|---|---|---|
| | | Reserved |
| X:$FF FF8A | OESCR | External Signal Control Register |
| | | Reserved |
| X:$FF FF8E | OBCNTR | Breakpoint Unit [0] Counter |
| | | Reserved |
| X:$FF FF90 | OBMSK (32 bits) | Breakpoint 1 Unit [0] Mask Register |
| X:$FF FF91 | — | Breakpoint 1 Unit [0] Mask Register |
| X:$FF FF92 | OBAR2 (32 bits) | Breakpoint 2 Unit [0] Address Register |
| X:$FF FF93 | — | Breakpoint 2 Unit [0] Address Register |
| X:$FF FF94 | OBAR1 (24 bits) | Breakpoint 1 Unit [0] Address Register |
| X:$FF FF95 | — | Breakpoint 1 Unit [0] Address Register |
| X:$FF FF96 | OBCR (24 bits) | Breakpoint Unit [0] Control Register |
| X:$FF FF97 | — | Breakpoint Unit [0] Control Register |
| X:$FF FF98 | OTB (21-24 bits/stage) | Trace Buffer Register Stages |
| X:$FF FF99 | — | Trace Buffer Register Stages |
| X:$FF FF9A | OTBPR (8 bits) | Trace Buffer Pointer Register |
| X:$FF FF9B | OTBCR | Trace Buffer Control Register |
| X:$FF FF9C | OBASE (8 bits) | Peripheral Base Address Register |
| X:$FF FF9D | OSR | Status Register |
| X:$FF FF9E | OSCNTR (24 bits) | Instruction Step Counter |

**Table 4-8 EOnCE Memory Map (Continued)**

| Address | Register Acronym | Register Name |
|---|---|---|
| X:$FF FF9F | — | Instruction Step Counter |
| X:$FF FFA0 | OCR (bits) | Control Register |
| | | Reserved |
| X:$FF FFFC | OCLSR (8 bits) | Core Lock / Unlock Status Register |
| X:$FF FFFD | OTXRXSR (8 bits) | Transmit and Receive Status and Control Register |
| X:$FF FFFE | OTX / ORX (32 bits) | Transmit Register / Receive Register |
| X:$FF FFFF | OTX1 / ORX1 | Transmit Register Upper Word<br>Receive Register Upper Word |

## 4.7 Peripheral Memory Mapped Registers

On-chip peripheral registers are part of the data memory map on the 56800E series. These locations may be accessed with the same addressing modes used for ordinary Data memory, except all peripheral registers should be read/written using word accesses only.

**Table 4-9** summarizes base addresses for the set of peripherals on the 56F8365 and 56F8165 devices. Peripherals are listed in order of the base address.

The following tables list all of the peripheral registers required to control or access the peripherals.

**Note:** *Features in italics are NOT available in the 56F8165 device.*

**Table 4-9 Data Memory Peripheral Base Address Map Summary**

| Peripheral | Prefix | Base Address | Table Number |
|---|---|---|---|
| External Memory Interface | EMI | X:$00 F020 | **4-10** |
| Timer A | TMRA | X:$00 F040 | **4-11** |
| *Timer B* | TMRB | X:$00 F080 | **4-12** |
| Timer C | TMRC | X:$00 F0C0 | **4-13** |
| *Timer D* | TMRD | X:$00 F100 | **4-14** |
| *PWM A* | PWMA | X:$00 F140 | **4-15** |
| PWM B | PWMB | X:$00 F160 | **4-16** |
| Quadrature Decoder 0 | DEC0 | X:$00 F180 | **4-17** |
| *Quadrature Decoder 1* | DEC1 | X:$00 F190 | **4-18** |
| ITCN | ITCN | X:$00 F1A0 | **4-19** |
| ADC A | ADCA | X:$00 F200 | **4-20** |
| ADC B | ADCB | X:$00 F240 | **4-21** |

## Table 4-9 Data Memory Peripheral Base Address Map Summary (Continued)

| Peripheral | Prefix | Base Address | Table Number |
|---|---|---|---|
| *Temperature Sensor* | TSENSOR | X:$00 F270 | 4-22 |
| SCI #0 | SCI0 | X:$00 F280 | 4-23 |
| SCI #1 | SCI1 | X:$00 F290 | 4-24 |
| SPI #0 | SPI0 | X:$00 F2A0 | 4-25 |
| SPI #1 | SPI1 | X:$00 F2B0 | 4-26 |
| COP | COP | X:$00 F2C0 | 4-27 |
| PLL, OSC | CLKGEN | X:$00 F2D0 | 4-28 |
| GPIO Port A | GPIOA | X:$00 F2E0 | 4-29 |
| GPIO Port B | GPIOB | X:$00 F300 | 4-30 |
| GPIO Port C | GPIOC | X:$00 F310 | 4-31 |
| GPIO Port D | GPIOD | X:$00 F320 | 4-32 |
| GPIO Port E | GPIOE | X:$00 F330 | 4-33 |
| GPIO Port F | GPIOF | X:$00 F340 | 4-34 |
| SIM | SIM | X:$00 F350 | 4-35 |
| Power Supervisor | LVI | X:$00 F360 | 4-36 |
| FM | FM | X:$00 F400 | 4-37 |
| *FlexCAN* | FC | X:$00 F800 | 4-38 |
| *FlexCAN2* | FC | X:$00 FA00 | 4-39 |

## Table 4-10 External Memory Integration Registers Address Map (EMI_BASE = $00 F020)

| Register Acronym | Address Offset | Register Description | |
|---|---|---|---|
| CSBAR 0 | $0 | Chip Select Base Address Register 0 | This table added to provide complete information, but this peripheral is not functional in the 56F8365 package |
| CSBAR 1 | $1 | Chip Select Base Address Register 1 | |
| CSBAR 2 | $2 | Chip Select Base Address Register 2 | |
| CSBAR 3 | $3 | Chip Select Base Address Register 3 | |
| CSBAR 4 | $4 | Chip Select Base Address Register 4 | |
| CSBAR 5 | $5 | Chip Select Base Address Register 5 | |
| CSBAR 6 | $6 | Chip Select Base Address Register 6 | |
| CSBAR 7 | $7 | Chip Select Base Address Register 7 | |
| CSOR 0 | $8 | Chip Select Option Register 0 | |
| CSOR 1 | $9 | Chip Select Option Register 1 | |
| CSOR 2 | $A | Chip Select Option Register 2 | |
| CSOR 3 | $B | Chip Select Option Register 3 | |
| CSOR 4 | $C | Chip Select Option Register 4 | |
| CSOR 5 | $D | Chip Select Option Register 5 | |
| CSOR 6 | $E | Chip Select Option Register 6 | |
| CSOR 7 | $F | Chip Select Option Register 7 | |
| CSTC 0 | $10 | Chip Select Timing Control Register 0 | |
| CSTC 1 | $11 | Chip Select Timing Control Register 1 | |
| CSTC 2 | $12 | Chip Select Timing Control Register 2 | |
| CSTC 3 | $13 | Chip Select Timing Control Register 3 | |
| CSTC 4 | $14 | Chip Select Timing Control Register 4 | |
| CSTC 5 | $15 | Chip Select Timing Control Register 5 | |
| CSTC 6 | $16 | Chip Select Timing Control Register 6 | |
| CSTC 7 | $17 | Chip Select Timing Control Register 7 | |
| BCR | $18 | Bus Control Register | |

## Table 4-11 Quad Timer A Registers Address Map (TMRA_BASE = $00 F040)

| Register Acronym | Address Offset | Register Description |
|---|---|---|
| TMRA0_CMP1 | $0 | Compare Register 1 |

## Table 4-11 Quad Timer A Registers Address Map (Continued) (TMRA_BASE = $00 F040)

| Register Acronym | Address Offset | Register Description |
|---|---|---|
| TMRA0_CMP2 | $1 | Compare Register 2 |
| TMRA0_CAP | $2 | Capture Register |
| TMRA0_LOAD | $3 | Load Register |
| TMRA0_HOLD | $4 | Hold Register |
| TMRA0_CNTR | $5 | Counter Register |
| TMRA0_CTRL | $6 | Control Register |
| TMRA0_SCR | $7 | Status and Control Register |
| TMRA0_CMPLD1 | $8 | Comparator Load Register 1 |
| TMRA0_CMPLD2 | $9 | Comparator Load Register 2 |
| TMRA0_COMSCR | $A | Comparator Status and Control Register |
| | | Reserved |
| TMRA1_CMP1 | $10 | Compare Register 1 |
| TMRA1_CMP2 | $11 | Compare Register 2 |
| TMRA1_CAP | $12 | Capture Register |
| TMRA1_LOAD | $13 | Load Register |
| TMRA1_HOLD | $14 | Hold Register |
| TMRA1_CNTR | $15 | Counter Register |
| TMRA1_CTRL | $16 | Control Register |
| TMRA1_SCR | $17 | Status and Control Register |
| TMRA1_CMPLD1 | $18 | Comparator Load Register 1 |
| TMRA1_CMPLD2 | $19 | Comparator Load Register 2 |
| TMRA1_COMSCR | $1A | Comparator Status and Control Register |
| | | Reserved |
| TMRA2_CMP1 | $20 | Compare Register 1 |
| TMRA2_CMP2 | $21 | Compare Register 2 |
| TMRA2_CAP | $22 | Capture Register |
| TMRA2_LOAD | $23 | Load Register |
| TMRA2_HOLD | $24 | Hold Register |
| TMRA2_CNTR | $25 | Counter Register |
| TMRA2_CTRL | $26 | Control Register |
| TMRA2_SCR | $27 | Status and Control Register |
| TMRA2_CMPLD1 | $28 | Comparator Load Register 1 |

## Table 4-11 Quad Timer A Registers Address Map (Continued) (TMRA_BASE = $00 F040)

| Register Acronym | Address Offset | Register Description |
|---|---|---|
| TMRA2_CMPLD2 | $29 | Comparator Load Register 2 |
| TMRA2_COMSCR | $2A | Comparator Status and Control Register |
| | | Reserved |
| TMRA3_CMP1 | $30 | Compare Register 1 |
| TMRA3_CMP2 | $31 | Compare Register 2 |
| TMRA3_CAP | $32 | Capture Register |
| TMRA3_LOAD | $33 | Load Register |
| TMRA3_HOLD | $34 | Hold Register |
| TMRA3_CNTR | $35 | Counter Register |
| TMRA3_CTRL | $36 | Control Register |
| TMRA3_SCR | $37 | Status and Control Register |
| TMRA3_CMPLD1 | $38 | Comparator Load Register 1 |
| TMRA3_CMPLD2 | $39 | Comparator Load Register 2 |
| TMRA3_COMSCR | $3A | Comparator Status and Control Register |

## Table 4-12 Quad Timer B Registers Address Map (TMRB_BASE = $00 F080)

***Quad Timer B is NOT available in the 56F8165 device***

| Register Acronym | Address Offset | Register Description |
|---|---|---|
| TMRB0_CMP1 | $0 | Compare Register 1 |
| TMRB0_CMP2 | $1 | Compare Register 2 |
| TMRB0_CAP | $2 | Capture Register |
| TMRB0_LOAD | $3 | Load Register |
| TMRB0_HOLD | $4 | Hold Register |
| TMRB0_CNTR | $5 | Counter Register |
| TMRB0_CTRL | $6 | Control Register |
| TMRB0_SCR | $7 | Status and Control Register |
| TMRB0_CMPLD1 | $8 | Comparator Load Register 1 |
| TMRB0_CMPLD2 | $9 | Comparator Load Register 2 |
| TMRB0_COMSCR | $A | Comparator Status and Control Register |
| | | Reserved |
| TMRB1_CMP1 | $10 | Compare Register 1 |

**Table 4-12 Quad Timer B Registers Address Map (Continued)**
**(TMRB_BASE = $00 F080)**
***Quad Timer B is NOT available in the 56F8165 device***

| Register Acronym | Address Offset | Register Description |
|---|---|---|
| TMRB1_CMP2 | $11 | Compare Register 2 |
| TMRB1_CAP | $12 | Capture Register |
| TMRB1_LOAD | $13 | Load Register |
| TMRB1_HOLD | $14 | Hold Register |
| TMRB1_CNTR | $15 | Counter Register |
| TMRB1_CTRL | $16 | Control Register |
| TMRB1_SCR | $17 | Status and Control Register |
| TMRB1_CMPLD1 | $18 | Comparator Load Register 1 |
| TMRB1_CMPLD2 | $19 | Comparator Load Register 2 |
| TMRB1_COMSCR | $1A | Comparator Status and Control Register |
| | | Reserved |
| TMRB2_CMP1 | $20 | Compare Register 1 |
| TMRB2_CMP2 | $21 | Compare Register 2 |
| TMRB2_CAP | $22 | Capture Register |
| TMRB2_LOAD | $23 | Load Register |
| TMRB2_HOLD | $24 | Hold Register |
| TMRB2_CNTR | $25 | Counter Register |
| TMRB2_CTRL | $26 | Control Register |
| TMRB2_SCR | $27 | Status and Control Register |
| TMRB2_CMPLD1 | $28 | Comparator Load Register 1 |
| TMRB2_CMPLD2 | $29 | Comparator Load Register 2 |
| TMRB2_COMSCR | $2A | Comparator Status and Control Register |
| | | Reserved |
| TMRB3_CMP1 | $30 | Compare Register 1 |
| TMRB3_CMP2 | $31 | Compare Register 2 |
| TMRB3_CAP | $32 | Capture Register |
| TMRB3_LOAD | $33 | Load Register |
| TMRB3_HOLD | $34 | Hold Register |
| TMRB3_CNTR | $35 | Counter Register |
| TMRB3_CTRL | $36 | Control Register |
| TMRB3_SCR | $37 | Status and Control Register |

## Table 4-12 Quad Timer B Registers Address Map (Continued) (TMRB_BASE = $00 F080)

***Quad Timer B is NOT available in the 56F8165 device***

| Register Acronym | Address Offset | Register Description |
|---|---|---|
| TMRB3_CMPLD1 | $38 | Comparator Load Register 1 |
| TMRB3_CMPLD2 | $39 | Comparator Load Register 2 |
| TMRB3_COMSCR | $3A | Comparator Status and Control Register |

## Table 4-13 Quad Timer C Registers Address Map (TMRC_BASE = $00 F0C0)

| Register Acronym | Address Offset | Register Description |
|---|---|---|
| TMRC0_CMP1 | $0 | Compare Register 1 |
| TMRC0_CMP2 | $1 | Compare Register 2 |
| TMRC0_CAP | $2 | Capture Register |
| TMRC0_LOAD | $3 | Load Register |
| TMRC0_HOLD | $4 | Hold Register |
| TMRC0_CNTR | $5 | Counter Register |
| TMRC0_CTRL | $6 | Control Register |
| TMRC0_SCR | $7 | Status and Control Register |
| TMRC0_CMPLD1 | $8 | Comparator Load Register 1 |
| TMRC0_CMPLD2 | $9 | Comparator Load Register 2 |
| TMRC0_COMSCR | $A | Comparator Status and Control Register |
| | | Reserved |
| TMRC1_CMP1 | $10 | Compare Register 1 |
| TMRC1_CMP2 | $11 | Compare Register 2 |
| TMRC1_CAP | $12 | Capture Register |
| TMRC1_LOAD | $13 | Load Register |
| TMRC1_HOLD | $14 | Hold Register |
| TMRC1_CNTR | $15 | Counter Register |
| TMRC1_CTRL | $16 | Control Register |
| TMRC1_SCR | $17 | Status and Control Register |
| TMRC1_CMPLD1 | $18 | Comparator Load Register 1 |
| TMRC1_CMPLD2 | $19 | Comparator Load Register 2 |
| TMRC1_COMSCR | $1A | Comparator Status and Control Register |
| | | Reserved |

## Table 4-13 Quad Timer C Registers Address Map (Continued) (TMRC_BASE = $00 F0C0)

| Register Acronym | Address Offset | Register Description |
|---|---|---|
| TMRC2_CMP1 | $20 | Compare Register 1 |
| TMRC2_CMP2 | $21 | Compare Register 2 |
| TMRC2_CAP | $22 | Capture Register |
| TMRC2_LOAD | $23 | Load Register |
| TMRC2_HOLD | $24 | Hold Register |
| TMRC2_CNTR | $25 | Counter Register |
| TMRC2_CTRL | $26 | Control Register |
| TMRC2_SCR | $27 | Status and Control Register |
| TMRC2_CMPLD1 | $28 | Comparator Load Register 1 |
| TMRC2_CMPLD2 | $29 | Comparator Load Register 2 |
| TMRC2_COMSCR | $2A | Comparator Status and Control Register |
| | | Reserved |
| TMRC3_CMP1 | $30 | Compare Register 1 |
| TMRC3_CMP2 | $31 | Compare Register 2 |
| TMRC3_CAP | $32 | Capture Register |
| TMRC3_LOAD | $33 | Load Register |
| TMRC3_HOLD | $34 | Hold Register |
| TMRC3_CNTR | $35 | Counter Register |
| TMRC3_CTRL | $36 | Control Register |
| TMRC3_SCR | $37 | Status and Control Register |
| TMRC3_CMPLD1 | $38 | Comparator Load Register 1 |
| TMRC3_CMPLD2 | $39 | Comparator Load Register 2 |
| TMRC3_COMSCR | $3A | Comparator Status and Control Register |

## Table 4-14 Quad Timer D Registers Address Map (TMRD_BASE = $00 F100)

***Quad Timer D is NOT available in the 56F8165 device***

| Register Acronym | Address Offset | Register Description |
|---|---|---|
| TMRD0_CMP1 | $0 | Compare Register 1 |
| TMRD0_CMP2 | $1 | Compare Register 2 |
| TMRD0_CAP | $2 | Capture Register |
| TMRD0_LOAD | $3 | Load Register |

**Table 4-14 Quad Timer D Registers Address Map (Continued)**
**(TMRD_BASE = $00 F100)**
***Quad Timer D is NOT available in the 56F8165 device***

| Register Acronym | Address Offset | Register Description |
|---|---|---|
| TMRD0_HOLD | $4 | Hold Register |
| TMRD0_CNTR | $5 | Counter Register |
| TMRD0_CTRL | $6 | Control Register |
| TMRD0_SCR | $7 | Status and Control Register |
| TMRD0_CMPLD1 | $8 | Comparator Load Register 1 |
| TMRD0_CMPLD2 | $9 | Comparator Load Register 2 |
| TMRD0_COMSCR | $A | Comparator Status and Control Register |
| | | Reserved |
| TMRD1_CMP1 | $10 | Compare Register 1 |
| TMRD1_CMP2 | $11 | Compare Register 2 |
| TMRD1_CAP | $12 | Capture Register |
| TMRD1_LOAD | $13 | Load Register |
| TMRD1_HOLD | $14 | Hold Register |
| TMRD1_CNTR | $15 | Counter Register |
| TMRD1_CTRL | $16 | Control Register |
| TMRD1_SCR | $17 | Status and Control Register |
| TMRD1_CMPLD1 | $18 | Comparator Load Register 1 |
| TMRD1_CMPLD2 | $19 | Comparator Load Register 2 |
| TMRD1_COMSCR | $1A | Comparator Status and Control Register |
| | | Reserved |
| TMRD2_CMP1 | $20 | Compare Register 1 |
| TMRD2_CMP2 | $21 | Compare Register 2 |
| TMRD2_CAP | $22 | Capture Register |
| TMRD2_LOAD | $23 | Load Register |
| TMRD2_HOLD | $24 | Hold Register |
| TMRD2_CNTR | $25 | Counter Register |
| TMRD2_CTRL | $26 | Control Register |
| TMRD2_SCR | $27 | Status and Control Register |
| TMRD2_CMPLD1 | $28 | Comparator Load Register 1 |
| TMRD2_CMPLD2 | $29 | Comparator Load Register 2 |
| TMRD2_COMSCR | $2A | Comparator Status and Control Register |

## Table 4-14 Quad Timer D Registers Address Map (Continued) (TMRD_BASE = $00 F100)
### *Quad Timer D is NOT available in the 56F8165 device*

| Register Acronym | Address Offset | Register Description |
|---|---|---|
| | | Reserved |
| TMRD3_CMP1 | $30 | Compare Register 1 |
| TMRD3_CMP2 | $31 | Compare Register 2 |
| TMRD3_CAP | $32 | Capture Register |
| TMRD3_LOAD | $33 | Load Register |
| TMRD3_HOLD | $34 | Hold Register |
| TMRD3_CNTR | $35 | Counter Register |
| TMRD3_CTRL | $36 | Control Register |
| TMRD3_SCR | $37 | Status and Control Register |
| TMRD3_CMPLD1 | $38 | Comparator Load Register 1 |
| TMRD3_CMPLD2 | $39 | Comparator Load Register 2 |
| TMRD3_COMSCR | $3A | Comparator Status and Control Register |

## Table 4-15 Pulse Width Modulator A Registers Address Map (PWMA_BASE = $00 F140)
### *PWMA is NOT available in the 56F8165 device*

| Register Acronym | Address Offset | Register Description |
|---|---|---|
| PWMA_PMCTL | $0 | Control Register |
| PWMA_PMFCTL | $1 | Fault Control Register |
| PWMA_PMFSA | $2 | Fault Status Acknowledge Register |
| PWMA_PMOUT | $3 | Output Control Register |
| PWMA_PMCNT | $4 | Counter Register |
| PWMA_PWMCM | $5 | Counter Modulo Register |
| PWMA_PWMVAL0 | $6 | Value Register 0 |
| PWMA_PWMVAL1 | $7 | Value Register 1 |
| PWMA_PWMVAL2 | $8 | Value Register 2 |
| PWMA_PWMVAL3 | $9 | Value Register 3 |
| PWMA_PWMVAL4 | $A | Value Register 4 |
| PWMA_PWMVAL5 | $B | Value Register 5 |
| PWMA_PMDEADTM | $C | Dead Time Register |
| PWMA_PMDISMAP1 | $D | Disable Mapping Register 1 |

**Table 4-15 Pulse Width Modulator A Registers Address Map (Continued) (PWMA_BASE = $00 F140)**
***PWMA is NOT available in the 56F8165 device***

| Register Acronym | Address Offset | Register Description |
|---|---|---|
| PWMA_PMDISMAP2 | $E | Disable Mapping Register 2 |
| PWMA_PMCFG | $F | Configure Register |
| PWMA_PMCCR | $10 | Channel Control Register |
| PWMA_PMPORT | $11 | Port Register |
| PWMA_PMICCR | $12 | PWM Internal Correction Control Register |

**Table 4-16 Pulse Width Modulator B Registers Address Map (PWMB_BASE = $00 F160)**

| Register Acronym | Address Offset | Register Description |
|---|---|---|
| PWMB_PMCTL | $0 | Control Register |
| PWMB_PMFCTL | $1 | Fault Control Register |
| PWMB_PMFSA | $2 | Fault Status Acknowledge Register |
| PWMB_PMOUT | $3 | Output Control Register |
| PWMB_PMCNT | $4 | Counter Register |
| PWMB_PWMCM | $5 | Counter Modulo Register |
| PWMB_PWMVAL0 | $6 | Value Register 0 |
| PWMB_PWMVAL1 | $7 | Value Register 1 |
| PWMB_PWMVAL2 | $8 | Value Register 2 |
| PWMB_PWMVAL3 | $9 | Value Register 3 |
| PWMB_PWMVAL4 | $A | Value Register 4 |
| PWMB_PWMVAL5 | $B | Value Register 5 |
| PWMB_PMDEADTM | $C | Dead Time Register |
| PWMB_PMDISMAP1 | $D | Disable Mapping Register 1 |
| PWMB_PMDISMAP2 | $E | Disable Mapping Register 2 |
| PWMB_PMCFG | $F | Configure Register |
| PWMB_PMCCR | $10 | Channel Control Register |
| PWMB_PMPORT | $11 | Port Register |
| PWMB_PMICCR | $12 | PWM Internal Correction Control Register |

## Table 4-17 Quadrature Decoder 0 Registers Address Map (DEC0_BASE = $00 F180)

| Register Acronym | Address Offset | Register Description |
|---|---|---|
| DEC0_DECCR | $0 | Decoder Control Register |
| DEC0_FIR | $1 | Filter Interval Register |
| DEC0_WTR | $2 | Watchdog Time-out Register |
| DEC0_POSD | $3 | Position Difference Counter Register |
| DEC0_POSDH | $4 | Position Difference Counter Hold Register |
| DEC0_REV | $5 | Revolution Counter Register |
| DEC0_REVH | $6 | Revolution Hold Register |
| DEC0_UPOS | $7 | Upper Position Counter Register |
| DEC0_LPOS | $8 | Lower Position Counter Register |
| DEC0_UPOSH | $9 | Upper Position Hold Register |
| DEC0_LPOSH | $A | Lower Position Hold Register |
| DEC0_UIR | $B | Upper Initialization Register |
| DEC0_LIR | $C | Lower Initialization Register |
| DEC0_IMR | $D | Input Monitor Register |

## Table 4-18 Quadrature Decoder 1 Registers Address Map (DEC1_BASE = $00 F190)

***Quadrature Decoder 1 is NOT available in the 56F8165 device***

| Register Acronym | Address Offset | Register Description |
|---|---|---|
| DEC1_DECCR | $0 | Decoder Control Register |
| DEC1_FIR | $1 | Filter Interval Register |
| DEC1_WTR | $2 | Watchdog Time-out Register |
| DEC1_POSD | $3 | Position Difference Counter Register |
| DEC1_POSDH | $4 | Position Difference Counter Hold Register |
| DEC1_REV | $5 | Revolution Counter Register |
| DEC1_REVH | $6 | Revolution Hold Register |
| DEC1_UPOS | $7 | Upper Position Counter Register |
| DEC1_LPOS | $8 | Lower Position Counter Register |
| DEC1_UPOSH | $9 | Upper Position Hold Register |
| DEC1_LPOSH | $A | Lower Position Hold Register |
| DEC1_UIR | $B | Upper Initialization Register |
| DEC1_LIR | $C | Lower Initialization Register |

**Table 4-18 Quadrature Decoder 1 Registers Address Map (Continued) (DEC1_BASE = $00 F190)**
***Quadrature Decoder 1 is NOT available in the 56F8165 device***

| Register Acronym | Address Offset | Register Description |
|---|---|---|
| DEC1_IMR | $D | Input Monitor Register |

**Table 4-19 Interrupt Control Registers Address Map (ITCN_BASE = $00 F1A0)**

| Register Acronym | Address Offset | Register Description |
|---|---|---|
| IPR 0 | $0 | Interrupt Priority Register 0 |
| IPR 1 | $1 | Interrupt Priority Register 1 |
| IPR 2 | $2 | Interrupt Priority Register 2 |
| IPR 3 | $3 | Interrupt Priority Register 3 |
| IPR 4 | $4 | Interrupt Priority Register 4 |
| IPR 5 | $5 | Interrupt Priority Register 5 |
| IPR 6 | $6 | Interrupt Priority Register 6 |
| IPR 7 | $7 | Interrupt Priority Register 7 |
| IPR 8 | $8 | Interrupt Priority Register 8 |
| IPR 9 | $9 | Interrupt Priority Register 9 |
| VBA | $A | Vector Base Address Register |
| FIM0 | $B | Fast Interrupt Match Register 0 |
| FIVAL0 | $C | Fast Interrupt Vector Address Low 0 Register |
| FIVAH0 | $D | Fast Interrupt Vector Address High 0 Register |
| FIM1 | $E | Fast Interrupt Match Register 1 |
| FIVAL1 | $F | Fast Interrupt Vector Address Low 1 Register |
| FIVAH1 | $10 | Fast Interrupt Vector Address High 1 Register |
| IRQP 0 | $11 | IRQ Pending Register 0 |
| IRQP 1 | $12 | IRQ Pending Register 1 |
| IRQP 2 | $13 | IRQ Pending Register 2 |
| IRQP 3 | $14 | IRQ Pending Register 3 |
| IRQP 4 | $15 | IRQ Pending Register 4 |
| IRQP 5 | $16 | IRQ Pending Register 5 |
| Reserved | | |
| ICTL | $1D | Interrupt Control Register |
| Reserved | | |

## Table 4-19 Interrupt Control Registers Address Map (Continued) (ITCN_BASE = $00 F1A0)

| Register Acronym | Address Offset | Register Description |
|---|---|---|
| IPR10 | $1F | Interrupt Priority Register 10 |

## Table 4-20 Analog-to-Digital Converter Registers Address Map (ADCA_BASE = $00 F200)

| Register Acronym | Address Offset | Register Description |
|---|---|---|
| ADCA_CR1 | $0 | Control Register 1 |
| ADCA_CR2 | $1 | Control Register 2 |
| ADCA_ZCC | $2 | Zero Crossing Control Register |
| ADCA_LST 1 | $3 | Channel List Register 1 |
| ADCA_LST 2 | $4 | Channel List Register 2 |
| ADCA_SDIS | $5 | Sample Disable Register |
| ADCA_STAT | $6 | Status Register |
| ADCA_LSTAT | $7 | Limit Status Register |
| ADCA_ZCSTAT | $8 | Zero Crossing Status Register |
| ADCA_RSLT 0 | $9 | Result Register 0 |
| ADCA_RSLT 1 | $A | Result Register 1 |
| ADCA_RSLT 2 | $B | Result Register 2 |
| ADCA_RSLT 3 | $C | Result Register 3 |
| ADCA_RSLT 4 | $D | Result Register 4 |
| ADCA_RSLT 5 | $E | Result Register 5 |
| ADCA_RSLT 6 | $F | Result Register 6 |
| ADCA_RSLT 7 | $10 | Result Register 7 |
| ADCA_LLMT 0 | $11 | Low Limit Register 0 |
| ADCA_LLMT 1 | $12 | Low Limit Register 1 |
| ADCA_LLMT 2 | $13 | Low Limit Register 2 |
| ADCA_LLMT 3 | $14 | Low Limit Register 3 |
| ADCA_LLMT 4 | $15 | Low Limit Register 4 |
| ADCA_LLMT 5 | $16 | Low Limit Register 5 |
| ADCA_LLMT 6 | $17 | Low Limit Register 6 |
| ADCA_LLMT 7 | $18 | Low Limit Register 7 |
| ADCA_HLMT 0 | $19 | High Limit Register 0 |
| ADCA_HLMT 1 | $1A | High Limit Register 1 |

## Table 4-20 Analog-to-Digital Converter Registers Address Map (Continued) (ADCA_BASE = $00 F200)

| Register Acronym | Address Offset | Register Description |
|---|---|---|
| ADCA_HLMT 2 | $1B | High Limit Register 2 |
| ADCA_HLMT 3 | $1C | High Limit Register 3 |
| ADCA_HLMT 4 | $1D | High Limit Register 4 |
| ADCA_HLMT 5 | $1E | High Limit Register 5 |
| ADCA_HLMT 6 | $1F | High Limit Register 6 |
| ADCA_HLMT 7 | $20 | High Limit Register 7 |
| ADCA_OFS 0 | $21 | Offset Register 0 |
| ADCA_OFS 1 | $22 | Offset Register 1 |
| ADCA_OFS 2 | $23 | Offset Register 2 |
| ADCA_OFS 3 | $24 | Offset Register 3 |
| ADCA_OFS 4 | $25 | Offset Register 4 |
| ADCA_OFS 5 | $26 | Offset Register 5 |
| ADCA_OFS 6 | $27 | Offset Register 6 |
| ADCA_OFS 7 | $28 | Offset Register 7 |
| ADCA_POWER | $29 | Power Control Register |
| ADCA_CAL | $2A | ADC Calibration Register |

## Table 4-21 Analog-to-Digital Converter Registers Address Map (ADCB_BASE = $00 F240)

| Register Acronym | Address Offset | Register Description |
|---|---|---|
| ADCB_CR1 | $0 | Control Register 1 |
| ADCB_CR2 | $1 | Control Register 2 |
| ADCB_ZCC | $2 | Zero Crossing Control Register |
| ADCB_LST 1 | $3 | Channel List Register 1 |
| ADCB_LST 2 | $4 | Channel List Register 2 |
| ADCB_SDIS | $5 | Sample Disable Register |
| ADCB_STAT | $6 | Status Register |
| ADCB_LSTAT | $7 | Limit Status Register |
| ADCB_ZCSTAT | $8 | Zero Crossing Status Register |
| ADCB_RSLT 0 | $9 | Result Register 0 |
| ADCB_RSLT 1 | $A | Result Register 1 |
| ADCB_RSLT 2 | $B | Result Register 2 |

## Table 4-21 Analog-to-Digital Converter Registers Address Map (Continued) (ADCB_BASE = $00 F240)

| Register Acronym | Address Offset | Register Description |
|---|---|---|
| ADCB_RSLT 3 | $C | Result Register 3 |
| ADCB_RSLT 4 | $D | Result Register 4 |
| ADCB_RSLT 5 | $E | Result Register 5 |
| ADCB_RSLT 6 | $F | Result Register 6 |
| ADCB_RSLT 7 | $10 | Result Register 7 |
| ADCB_LLMT 0 | $11 | Low Limit Register 0 |
| ADCB_LLMT 1 | $12 | Low Limit Register 1 |
| ADCB_LLMT 2 | $13 | Low Limit Register 2 |
| ADCB_LLMT 3 | $14 | Low Limit Register 3 |
| ADCB_LLMT 4 | $15 | Low Limit Register 4 |
| ADCB_LLMT 5 | $16 | Low Limit Register 5 |
| ADCB_LLMT 6 | $17 | Low Limit Register 6 |
| ADCB_LLMT 7 | $18 | Low Limit Register 7 |
| ADCB_HLMT 0 | $19 | High Limit Register 0 |
| ADCB_HLMT 1 | $1A | High Limit Register 1 |
| ADCB_HLMT 2 | $1B | High Limit Register 2 |
| ADCB_HLMT 3 | $1C | High Limit Register 3 |
| ADCB_HLMT 4 | $1D | High Limit Register 4 |
| ADCB_HLMT 5 | $1E | High Limit Register 5 |
| ADCB_HLMT 6 | $1F | High Limit Register 6 |
| ADCB_HLMT 7 | $20 | High Limit Register 7 |
| ADCB_OFS 0 | $21 | Offset Register 0 |
| ADCB_OFS 1 | $22 | Offset Register 1 |
| ADCB_OFS 2 | $23 | Offset Register 2 |
| ADCB_OFS 3 | $24 | Offset Register 3 |
| ADCB_OFS 4 | $25 | Offset Register 4 |
| ADCB_OFS 5 | $26 | Offset Register 5 |
| ADCB_OFS 6 | $27 | Offset Register 6 |
| ADCB_OFS 7 | $28 | Offset Register 7 |
| ADCB_POWER | $29 | Power Control Register |
| ADCB_CAL | $2A | ADC Calibration Register |

### Table 4-22 Temperature Sensor Register Address Map (TSENSOR_BASE = $00 F270)
***Temperature Sensor is NOT available in the 56F8165 device***

| Register Acronym | Address Offset | Register Description |
|---|---|---|
| TSENSOR_CNTL | $0 | Control Register |

### Table 4-23 Serial Communication Interface 0 Registers Address Map (SCI0_BASE = $00 F280)

| Register Acronym | Address Offset | Register Description |
|---|---|---|
| SCI0_SCIBR | $0 | Baud Rate Register |
| SCI0_SCICR | $1 | Control Register |
| | | Reserved |
| SCI0_SCISR | $3 | Status Register |
| SCI0_SCIDR | $4 | Data Register |

### Table 4-24 Serial Communication Interface 1 Registers Address Map (SCI1_BASE = $00 F290)

| Register Acronym | Address Offset | Register Description |
|---|---|---|
| SCI1_SCIBR | $0 | Baud Rate Register |
| SCI1_SCICR | $1 | Control Register |
| | | Reserved |
| SCI1_SCISR | $3 | Status Register |
| SCI1_SCIDR | $4 | Data Register |

### Table 4-25 Serial Peripheral Interface 0 Registers Address Map (SPI0_BASE = $00 F2A0)

| Register Acronym | Address Offset | Register Description |
|---|---|---|
| SPI0_SPSCR | $0 | Status and Control Register |
| SPI0_SPDSR | $1 | Data Size Register |
| SPI0_SPDRR | $2 | Data Receive Register |
| SPI0_SPDTR | $3 | Data Transmitter Register |

## Table 4-26 Serial Peripheral Interface 1 Registers Address Map (SPI1_BASE = $00 F2B0)

| Register Acronym | Address Offset | Register Description |
|---|---|---|
| SPI1_SPSCR | $0 | Status and Control Register |
| SPI1_SPDSR | $1 | Data Size Register |
| SPI1_SPDRR | $2 | Data Receive Register |
| SPI1_SPDTR | $3 | Data Transmitter Register |

## Table 4-27 Computer Operating Properly Registers Address Map (COP_BASE = $00 F2C0)

| Register Acronym | Address Offset | Register Description |
|---|---|---|
| COPCTL | $0 | Control Register |
| COPTO | $1 | Time Out Register |
| COPCTR | $2 | Counter Register |

## Table 4-28 Clock Generation Module Registers Address Map (CLKGEN_BASE = $00 F2D0)

| Register Acronym | Address Offset | Register Description |
|---|---|---|
| PLLCR | $0 | Control Register |
| PLLDB | $1 | Divide-By Register |
| PLLSR | $2 | Status Register |
| | | Reserved |
| SHUTDOWN | $4 | Shutdown Register |
| OSCTL | $5 | Oscillator Control Register |

## Table 4-29 GPIOA Registers Address Map (GPIOA_BASE = $00 F2E0)

| Register Acronym | Address Offset | Register Description | Reset Value |
|---|---|---|---|
| GPIOA_PUR | $0 | Pull-up Enable Register | 0 x 3FFF |
| GPIOA_DR | $1 | Data Register | 0 x 0000 |
| GPIOA_DDR | $2 | Data Direction Register | 0 x 0000 |
| GPIOA_PER | $3 | Peripheral Enable Register | 0 x 3FFF |

## Table 4-29 GPIOA Registers Address Map (Continued) (GPIOA_BASE = $00 F2E0)

| Register Acronym | Address Offset | Register Description | Reset Value |
|---|---|---|---|
| GPIOA_IAR | $4 | Interrupt Assert Register | 0 x 0000 |
| GPIOA_IENR | $5 | Interrupt Enable Register | 0 x 0000 |
| GPIOA_IPOLR | $6 | Interrupt Polarity Register | 0 x 0000 |
| GPIOA_IPR | $7 | Interrupt Pending Register | 0 x 0000 |
| GPIOA_IESR | $8 | Interrupt Edge-Sensitive Register | 0 x 0000 |
| GPIOA_PPMODE | $9 | Push-Pull Mode Register | 0 x 3FFF |
| GPIOA_RAWDATA | $A | Raw Data Input Register | — |

## Table 4-30 GPIOB Registers Address Map (GPIOB_BASE = $00 F300)

| Register Acronym | Address Offset | Register Description | Reset Value |
|---|---|---|---|
| GPIOB_PUR | $0 | Pull-up Enable Register | 0 x 00FF |
| GPIOB_DR | $1 | Data Register | 0 x 0000 |
| GPIOB_DDR | $2 | Data Direction Register | 0 x 0000 |
| GPIOB_PER | $3 | Peripheral Enable Register | 0 x 0000 |
| GPIOB_IAR | $4 | Interrupt Assert Register | 0 x 0000 |
| GPIOB_IENR | $5 | Interrupt Enable Register | 0 x 0000 |
| GPIOB_IPOLR | $6 | Interrupt Polarity Register | 0 x 0000 |
| GPIOB_IPR | $7 | Interrupt Pending Register | 0 x 0000 |
| GPIOB_IESR | $8 | Interrupt Edge-Sensitive Register | 0 x 0000 |
| GPIOB_PPMODE | $9 | Push-Pull Mode Register | 0 x 00FF |
| GPIOB_RAWDATA | $A | Raw Data Input Register | — |

## Table 4-31 GPIOC Registers Address Map (GPIOC_BASE = $00 F310)

| Register Acronym | Address Offset | Register Description | Reset Value |
|---|---|---|---|
| GPIOC_PUR | $0 | Pull-up Enable Register | 0 x 07FF |
| GPIOC_DR | $1 | Data Register | 0 x 0000 |
| GPIOC_DDR | $2 | Data Direction Register | 0 x 0000 |
| GPIOC_PER | $3 | Peripheral Enable Register | 0 x 07FF |
| GPIOC_IAR | $4 | Interrupt Assert Register | 0 x 0000 |

## Table 4-31 GPIOC Registers Address Map (Continued) (GPIOC_BASE = $00 F310)

| Register Acronym | Address Offset | Register Description | Reset Value |
|---|---|---|---|
| GPIOC_IENR | $5 | Interrupt Enable Register | 0 x 0000 |
| GPIOC_IPOLR | $6 | Interrupt Polarity Register | 0 x 0000 |
| GPIOC_IPR | $7 | Interrupt Pending Register | 0 x 0000 |
| GPIOC_IESR | $8 | Interrupt Edge-Sensitive Register | 0 x 0000 |
| GPIOC_PPMODE | $9 | Push-Pull Mode Register | 0 x 07FF |
| GPIOC_RAWDATA | $A | Raw Data Input Register | — |

## Table 4-32 GPIOD Registers Address Map (GPIOD_BASE = $00 F320)

| Register Acronym | Address Offset | Register Description | Reset Value |
|---|---|---|---|
| GPIOD_PUR | $0 | Pull-up Enable Register | 0 x 1FFF |
| GPIOD_DR | $1 | Data Register | 0 x 0000 |
| GPIOD_DDR | $2 | Data Direction Register | 0 x 0000 |
| GPIOD_PER | $3 | Peripheral Enable Register | 0 x 1FC0 |
| GPIOD_IAR | $4 | Interrupt Assert Register | 0 x 0000 |
| GPIOD_IENR | $5 | Interrupt Enable Register | 0 x 0000 |
| GPIOD_IPOLR | $6 | Interrupt Polarity Register | 0 x 0000 |
| GPIOD_IPR | $7 | Interrupt Pending Register | 0 x 0000 |
| GPIOD_IESR | $8 | Interrupt Edge-Sensitive Register | 0 x 0000 |
| GPIOD_PPMODE | $9 | Push-Pull Mode Register | 0 x 1FFF |
| GPIOD_RAWDATA | $A | Raw Data Input Register | — |

## Table 4-33 GPIOE Registers Address Map (GPIOE_BASE = $00 F330)

| Register Acronym | Address Offset | Register Description | Reset Value |
|---|---|---|---|
| GPIOE_PUR | $0 | Pull-up Enable Register | 0 x 3FFF |
| GPIOE_DR | $1 | Data Register | 0 x 0000 |
| GPIOE_DDR | $2 | Data Direction Register | 0 x 0000 |
| GPIOE_PER | $3 | Peripheral Enable Register | 0 x 3FFF |
| GPIOE_IAR | $4 | Interrupt Assert Register | 0 x 0000 |
| GPIOE_IENR | $5 | Interrupt Enable Register | 0 x 0000 |

## Table 4-33 GPIOE Registers Address Map (Continued) (GPIOE_BASE = $00 F330)

| Register Acronym | Address Offset | Register Description | Reset Value |
|---|---|---|---|
| GPIOE_IPOLR | $6 | Interrupt Polarity Register | 0 x 0000 |
| GPIOE_IPR | $7 | Interrupt Pending Register | 0 x 0000 |
| GPIOE_IESR | $8 | Interrupt Edge-Sensitive Register | 0 x 0000 |
| GPIOE_PPMODE | $9 | Push-Pull Mode Register | 0 x 3FFF |
| GPIOE_RAWDATA | $A | Raw Data Input Register | — |

## Table 4-34 GPIOF Registers Address Map (GPIOF_BASE = $00 F340)

| Register Acronym | Address Offset | Register Description | Reset Value |
|---|---|---|---|
| GPIOF_PUR | $0 | Pull-up Enable Register | 0 x FFFF |
| GPIOF_DR | $1 | Data Register | 0 x 0000 |
| GPIOF_DDR | $2 | Data Direction Register | 0 x 0000 |
| GPIOF_PER | $3 | Peripheral Enable Register | 0 x FFFF |
| GPIOF_IAR | $4 | Interrupt Assert Register | 0 x 0000 |
| GPIOF_IENR | $5 | Interrupt Enable Register | 0 x 0000 |
| GPIOF_IPOLR | $6 | Interrupt Polarity Register | 0 x 0000 |
| GPIOF_IPR | $7 | Interrupt Pending Register | 0 x 0000 |
| GPIOF_IESR | $8 | Interrupt Edge-Sensitive Register | 0 x 0000 |
| GPIOF_PPMODE | $9 | Push-Pull Mode Register | 0 x FFFF |
| GPIOF_RAWDATA | $A | Raw Data Input Register | — |

## Table 4-35 System Integration Module Registers Address Map (SIM_BASE = $00 F350)

| Register Acronym | Address Offset | Register Description |
|---|---|---|
| SIM_CONTROL | $0 | Control Register |
| SIM_RSTSTS | $1 | Reset Status Register |
| SIM_SCR0 | $2 | Software Control Register 0 |
| SIM_SCR1 | $3 | Software Control Register 1 |
| SIM_SCR2 | $4 | Software Control Register 2 |
| SIM_SCR3 | $5 | Software Control Register 3 |
| SIM_MSH_ID | $6 | Most Significant Half JTAG ID |

## Table 4-35 System Integration Module Registers Address Map (Continued) (SIM_BASE = $00 F350)

| Register Acronym | Address Offset | Register Description |
|---|---|---|
| SIM_LSH_ID | $7 | Least Significant Half JTAG ID |
| SIM_PUDR | $8 | Pull-up Disable Register |
| | | Reserved |
| SIM_CLKOSR | $A | Clock Out Select Register |
| SIM_GPS | $B | Quad Decoder 1 / Timer B / SPI 1 Select Register |
| SIM_PCE | $C | Peripheral Clock Enable Register |
| SIM_ISALH | $D | I/O Short Address Location High Register |
| SIM_ISALL | $E | I/O Short Address Location Low Register |
| SIM_PCE2 | $F | Peripheral Clock Enable Register 2 |

## Table 4-36 Power Supervisor Registers Address Map (LVI_BASE = $00 F360)

| Register Acronym | Address Offset | Register Description |
|---|---|---|
| LVI_CONTROL | $0 | Control Register |
| LVI_STATUS | $1 | Status Register |

## Table 4-37 Flash Module Registers Address Map (FM_BASE = $00 F400)

| Register Acronym | Address Offset | Register Description |
|---|---|---|
| FMCLKD | $0 | Clock Divider Register |
| FMMCR | $1 | Module Control Register |
| | | Reserved |
| FMSECH | $3 | Security High Half Register |
| FMSECL | $4 | Security Low Half Register |
| | | Reserved |
| | | Reserved |
| FMPROT | $10 | Protection Register (Banked) |
| FMPROTB | $11 | Protection Boot Register (Banked) |
| | | Reserved |
| FMUSTAT | $13 | User Status Register (Banked) |
| FMCMD | $14 | Command Register (Banked) |

## Table 4-37 Flash Module Registers Address Map (Continued) (FM_BASE = $00 F400)

| Register Acronym | Address Offset | Register Description |
|---|---|---|
| | | Reserved |
| | | Reserved |
| FMOPT 0 | $1A | 16-Bit Information Option Register 0<br>Hot temperature ADC reading of Temperature Sensor; value set during factory test |
| FMOPT 1 | $1B | 16-Bit Information Option Register 1<br>Not used |
| FMOPT 2 | $1C | 16-Bit Information Option Register 2<br>Room temperature ADC reading of Temperature Sensor; value set during factory test |

## Table 4-38 FlexCAN Registers Address Map (FC_BASE = $00 F800)

***FlexCAN is NOT available in the 56F8165 device***

| Register Acronym | Address Offset | Register Description |
|---|---|---|
| FCMCR | $0 | Module Configuration Register |
| | | Reserved |
| FCCTL0 | $3 | Control Register 0 Register |
| FCCTL1 | $4 | Control Register 1 Register |
| FCTMR | $5 | Free-Running Timer Register |
| FCMAXMB | $6 | Maximum Message Buffer Configuration Register |
| | | Reserved |
| FCRXGMASK_H | $8 | Receive Global Mask High Register |
| FCRXGMASK_L | $9 | Receive Global Mask Low Register |
| FCRX14MASK_H | $A | Receive Buffer 14 Mask High Register |
| FCRX14MASK_L | $B | Receive Buffer 14 Mask Low Register |
| FCRX15MASK_H | $C | Receive Buffer 15 Mask High Register |
| FCRX15MASK_L | $D | Receive Buffer 15 Mask Low Register |
| | | Reserved |
| FCSTATUS | $10 | Error and Status Register |
| FCIMASK1 | $11 | Interrupt Masks 1 Register |
| FCIFLAG1 | $12 | Interrupt Flags 1 Register |
| FCR/T_ERROR_CNTRS | $13 | Receive and Transmit Error Counters Register |
| | | Reserved |

**Table 4-38 FlexCAN Registers Address Map (Continued)**
**(FC_BASE = $00 F800)**
***FlexCAN is NOT available in the 56F8165 device***

| Register Acronym | Address Offset | Register Description |
|---|---|---|
| | | Reserved |
| | | Reserved |
| FCMB0_CONTROL | $40 | Message Buffer 0 Control / Status Register |
| FCMB0_ID_HIGH | $41 | Message Buffer 0 ID High Register |
| FCMB0_ID_LOW | $42 | Message Buffer 0 ID Low Register |
| FCMB0_DATA | $43 | Message Buffer 0 Data Register |
| FCMB0_DATA | $44 | Message Buffer 0 Data Register |
| FCMB0_DATA | $45 | Message Buffer 0 Data Register |
| FCMB0_DATA | $46 | Message Buffer 0 Data Register |
| | | Reserved |
| FCMSB1_CONTROL | $48 | Message Buffer 1 Control / Status Register |
| FCMSB1_ID_HIGH | $49 | Message Buffer 1 ID High Register |
| FCMSB1_ID_LOW | $4A | Message Buffer 1 ID Low Register |
| FCMB1_DATA | $4B | Message Buffer 1 Data Register |
| FCMB1_DATA | $4C | Message Buffer 1 Data Register |
| FCMB1_DATA | $4D | Message Buffer 1 Data Register |
| FCMB1_DATA | $4E | Message Buffer 1 Data Register |
| | | Reserved |
| FCMB2_CONTROL | $50 | Message Buffer 2 Control / Status Register |
| FCMB2_ID_HIGH | $51 | Message Buffer 2 ID High Register |
| FCMB2_ID_LOW | $52 | Message Buffer 2 ID Low Register |
| FCMB2_DATA | $53 | Message Buffer 2 Data Register |
| FCMB2_DATA | $54 | Message Buffer 2 Data Register |
| FCMB2_DATA | $55 | Message Buffer 2 Data Register |
| FCMB2_DATA | $56 | Message Buffer 2 Data Register |
| | | Reserved |
| FCMB3_CONTROL | $58 | Message Buffer 3 Control / Status Register |
| FCMB3_ID_HIGH | $59 | Message Buffer 3 ID High Register |
| FCMB3_ID_LOW | $5A | Message Buffer 3 ID Low Register |
| FCMB3_DATA | $5B | Message Buffer 3 Data Register |
| FCMB3_DATA | $5C | Message Buffer 3 Data Register |

**Table 4-38 FlexCAN Registers Address Map (Continued)**
**(FC_BASE = $00 F800)**
***FlexCAN is NOT available in the 56F8165 device***

| Register Acronym | Address Offset | Register Description |
|---|---|---|
| FCMB3_DATA | $5D | Message Buffer 3 Data Register |
| FCMB3_DATA | $5E | Message Buffer 3 Data Register |
| | | Reserved |
| FCMB4_CONTROL | $60 | Message Buffer 4 Control / Status Register |
| FCMB4_ID_HIGH | $61 | Message Buffer 4 ID High Register |
| FCMB4_ID_LOW | $62 | Message Buffer 4 ID Low Register |
| FCMB4_DATA | $63 | Message Buffer 4 Data Register |
| FCMB4_DATA | $64 | Message Buffer 4 Data Register |
| FCMB4_DATA | $65 | Message Buffer 4 Data Register |
| FCMB4_DATA | $66 | Message Buffer 4 Data Register |
| | | Reserved |
| FCMB5_CONTROL | $68 | Message Buffer 5 Control / Status Register |
| FCMB5_ID_HIGH | $69 | Message Buffer 5 ID High Register |
| FCMB5_ID_LOW | $6A | Message Buffer 5 ID Low Register |
| FCMB5_DATA | $6B | Message Buffer 5 Data Register |
| FCMB5_DATA | $6C | Message Buffer 5 Data Register |
| FCMB5_DATA | $6D | Message Buffer 5 Data Register |
| FCMB5_DATA | $6E | Message Buffer 5 Data Register |
| | | Reserved |
| FCMB6_CONTROL | $70 | Message Buffer 6 Control / Status Register |
| FCMB6_ID_HIGH | $71 | Message Buffer 6 ID High Register |
| FCMB6_ID_LOW | $72 | Message Buffer 6 ID Low Register |
| FCMB6_DATA | $73 | Message Buffer 6 Data Register |
| FCMB6_DATA | $74 | Message Buffer 6 Data Register |
| FCMB6_DATA | $75 | Message Buffer 6 Data Register |
| FCMB6_DATA | $76 | Message Buffer 6 Data Register |
| | | Reserved |
| FCMB7_CONTROL | $78 | Message Buffer 7 Control / Status Register |
| FCMB7_ID_HIGH | $79 | Message Buffer 7 ID High Register |
| FCMB7_ID_LOW | $7A | Message Buffer 7 ID Low Register |
| FCMB7_DATA | $7B | Message Buffer 7 Data Register |

**Table 4-38 FlexCAN Registers Address Map (Continued)**
**(FC_BASE = $00 F800)**
***FlexCAN is NOT available in the 56F8165 device***

| Register Acronym | Address Offset | Register Description |
|---|---|---|
| FCMB7_DATA | $7C | Message Buffer 7 Data Register |
| FCMB7_DATA | $7D | Message Buffer 7 Data Register |
| FCMB7_DATA | $7E | Message Buffer 7 Data Register |
| | | Reserved |
| FCMB8_CONTROL | $80 | Message Buffer 8 Contro l /Status Register |
| FCMB8_ID_HIGH | $81 | Message Buffer 8 ID High Register |
| FCMB8_ID_LOW | $82 | Message Buffer 8 ID Low Register |
| FCMB8_DATA | $83 | Message Buffer 8 Data Register |
| FCMB8_DATA | $84 | Message Buffer 8 Data Register |
| FCMB8_DATA | $85 | Message Buffer 8 Data Register |
| FCMB8_DATA | $86 | Message Buffer 8 Data Register |
| | | Reserved |
| FCMB9_CONTROL | $88 | Message Buffer 9 Control / Status Register |
| FCMB9_ID_HIGH | $89 | Message Buffer 9 ID High Register |
| FCMB9_ID_LOW | $8A | Message Buffer 9 ID Low Register |
| FCMB9_DATA | $8B | Message Buffer 9 Data Register |
| FCMB9_DATA | $8C | Message Buffer 9 Data Register |
| FCMB9_DATA | $8D | Message Buffer 9 Data Register |
| FCMB9_DATA | $8E | Message Buffer 9 Data Register |
| | | Reserved |
| FCMB10_CONTROL | $90 | Message Buffer 10 Control / Status Register |
| FCMB10_ID_HIGH | $91 | Message Buffer 10 ID High Register |
| FCMB10_ID_LOW | $92 | Message Buffer 10 ID Low Register |
| FCMB10_DATA | $93 | Message Buffer 10 Data Register |
| FCMB10_DATA | $94 | Message Buffer 10 Data Register |
| FCMB10_DATA | $95 | Message Buffer 10 Data Register |
| FCMB10_DATA | $96 | Message Buffer 10 Data Register |
| | | Reserved |
| FCMB11_CONTROL | $98 | Message Buffer 11 Control / Status Register |
| FCMB11_ID_HIGH | $99 | Message Buffer 11 ID High Register |
| FCMB11_ID_LOW | $9A | Message Buffer 11 ID Low Register |

**Table 4-38 FlexCAN Registers Address Map (Continued)**
**(FC_BASE = $00 F800)**
***FlexCAN is NOT available in the 56F8165 device***

| Register Acronym | Address Offset | Register Description |
|---|---|---|
| FCMB11_DATA | $9B | Message Buffer 11 Data Register |
| FCMB11_DATA | $9C | Message Buffer 11 Data Register |
| FCMB11_DATA | $9D | Message Buffer 11 Data Register |
| FCMB11_DATA | $9E | Message Buffer 11 Data Register |
| | | Reserved |
| FCMB12_CONTROL | $A0 | Message Buffer 12 Control / Status Register |
| FCMB12_ID_HIGH | $A1 | Message Buffer 12 ID High Register |
| FCMB12_ID_LOW | $A2 | Message Buffer 12 ID Low Register |
| FCMB12_DATA | $A3 | Message Buffer 12 Data Register |
| FCMB12_DATA | $A4 | Message Buffer 12 Data Register |
| FCMB12_DATA | $A5 | Message Buffer 12 Data Register |
| FCMB12_DATA | $A6 | Message Buffer 12 Data Register |
| | | Reserved |
| FCMB13_CONTROL | $A8 | Message Buffer 13 Control / Status Register |
| FCMB13_ID_HIGH | $A9 | Message Buffer 13 ID High Register |
| FCMB13_ID_LOW | $AA | Message Buffer 13 ID Low Register |
| FCMB13_DATA | $AB | Message Buffer 13 Data Register |
| FCMB13_DATA | $AC | Message Buffer 13 Data Register |
| FCMB13_DATA | $AD | Message Buffer 13 Data Register |
| FCMB13_DATA | $AE | Message Buffer 13 Data Register |
| | | Reserved |
| FCMB14_CONTROL | $B0 | Message Buffer 14 Control / Status Register |
| FCMB14_ID_HIGH | $B1 | Message Buffer 14 ID High Register |
| FCMB14_ID_LOW | $B2 | Message Buffer 14 ID Low Register |
| FCMB14_DATA | $B3 | Message Buffer 14 Data Register |
| FCMB14_DATA | $B4 | Message Buffer 14 Data Register |
| FCMB14_DATA | $B5 | Message Buffer 14 Data Register |
| FCMB14_DATA | $B6 | Message Buffer 14 Data Register |
| | | Reserved |
| FCMB15_CONTROL | $B8 | Message Buffer 15 Control / Status Register |
| FCMB15_ID_HIGH | $B9 | Message Buffer 15 ID High Register |

## Table 4-38 FlexCAN Registers Address Map (Continued)
## (FC_BASE = $00 F800)
## *FlexCAN is NOT available in the 56F8165 device*

| Register Acronym | Address Offset | Register Description |
|---|---|---|
| FCMB15_ID_LOW | $BA | Message Buffer 15 ID Low Register |
| FCMB15_DATA | $BB | Message Buffer 15 Data Register |
| FCMB15_DATA | $BC | Message Buffer 15 Data Register |
| FCMB15_DATA | $BD | Message Buffer 15 Data Register |
| FCMB15_DATA | $BE | Message Buffer 15 Data Register |
| | | Reserved |

## Table 4-39 FlexCAN2 Registers Address Map
## (FC2_BASE = $00 FA00)
## *FlexCAN2 is NOT available in the 56F8165 device*

| Register Acronym | Address Offset | Register Description |
|---|---|---|
| FC2MCR | $0 | Module Configuration Register |
| | | Reserved |
| FC2CTL0 | $3 | Control Register 0 Register |
| FC2CTL1 | $4 | Control Register 1 Register |
| FC2TMR | $5 | Free-Running Timer Register |
| FC2MAXMB | $6 | Maximum Message Buffer Configuration Register |
| FC2IMASK2 | $7 | Interrupt Masks 2 Register |
| FC2RXGMASK_H | $8 | Receive Global Mask High Register |
| FC2RXGMASK_L | $9 | Receive Global Mask Low Register |
| FC2RX14MASK_H | $A | Receive Buffer 14 Mask High Register |
| FC2RX14MASK_L | $B | Receive Buffer 14 Mask Low Register |
| FC2RX15MASK_H | $C | Receive Buffer 15 Mask High Register |
| FC2RX15MASK_L | $D | Receive Buffer 15 Mask Low Register |
| | | Reserved |
| FC2STATUS | $10 | Error and Status Register |
| FC2IMASK1 | $11 | Interrupt Masks 1 Register |
| FC2IFLAG1 | $12 | Interrupt Flags 1 Register |
| FC2R/T_ERROR_CNTRS | $13 | Receive and Transmit Error Counters Register |
| | | Reserved |
| FC2IFLAG 2 | $1B | Interrupt Flags 2 Register |

**Table 4-39 FlexCAN2 Registers Address Map (Continued)**
**(FC2_BASE = $00 FA00)**
***FlexCAN2 is NOT available in the 56F8165 device***

| Register Acronym | Address Offset | Register Description |
|---|---|---|
| | | Reserved |
| FC2MB0_CONTROL | $40 | Message Buffer 0 Control / Status Register |
| FC2MB0_ID_HIGH | $41 | Message Buffer 0 ID High Register |
| FC2MB0_ID_LOW | $42 | Message Buffer 0 ID Low Register |
| FC2MB0_DATA | $43 | Message Buffer 0 Data Register |
| FC2MB0_DATA | $44 | Message Buffer 0 Data Register |
| FC2MB0_DATA | $45 | Message Buffer 0 Data Register |
| FC2MB0_DATA | $46 | Message Buffer 0 Data Register |
| | | Reserved |
| FC2MSB1_CONTROL | $48 | Message Buffer 1 Control / Status Register |
| FC2MSB1_ID_HIGH | $49 | Message Buffer 1 ID High Register |
| FC2MSB1_ID_LOW | $4A | Message Buffer 1 ID Low Register |
| FC2MB1_DATA | $4B | Message Buffer 1 Data Register |
| FC2MB1_DATA | $4C | Message Buffer 1 Data Register |
| FC2MB1_DATA | $4D | Message Buffer 1 Data Register |
| FC2MB1_DATA | $4E | Message Buffer 1 Data Register |
| | | Reserved |
| FC2MB2_CONTROL | $50 | Message Buffer 2 Control / Status Register |
| FC2MB2_ID_HIGH | $51 | Message Buffer 2 ID High Register |
| FC2MB2_ID_LOW | $52 | Message Buffer 2 ID Low Register |
| FC2MB2_DATA | $53 | Message Buffer 2 Data Register |
| FC2MB2_DATA | $54 | Message Buffer 2 Data Register |
| FC2MB2_DATA | $55 | Message Buffer 2 Data Register |
| FC2MB2_DATA | $56 | Message Buffer 2 Data Register |
| | | Reserved |
| FC2MB3_CONTROL | $58 | Message Buffer 3 Control / Status Register |
| FC2MB3_ID_HIGH | $59 | Message Buffer 3 ID High Register |
| FC2MB3_ID_LOW | $5A | Message Buffer 3 ID Low Register |
| FC2MB3_DATA | $5B | Message Buffer 3 Data Register |
| FC2MB3_DATA | $5C | Message Buffer 3 Data Register |
| FC2MB3_DATA | $5D | Message Buffer 3 Data Register |

## Table 4-39 FlexCAN2 Registers Address Map (Continued)
## (FC2_BASE = $00 FA00)
### *FlexCAN2 is NOT available in the 56F8165 device*

| Register Acronym | Address Offset | Register Description |
|---|---|---|
| FC2MB3_DATA | $5E | Message Buffer 3 Data Register |
| | | Reserved |
| FC2MB4_CONTROL | $60 | Message Buffer 4 Control / Status Register |
| FC2MB4_ID_HIGH | $61 | Message Buffer 4 ID High Register |
| FC2MB4_ID_LOW | $62 | Message Buffer 4 ID Low Register |
| FC2MB4_DATA | $63 | Message Buffer 4 Data Register |
| FC2MB4_DATA | $64 | Message Buffer 4 Data Register |
| FC2MB4_DATA | $65 | Message Buffer 4 Data Register |
| FC2MB4_DATA | $66 | Message Buffer 4 Data Register |
| | | Reserved |
| FC2MB5_CONTROL | $68 | Message Buffer 5 Control / Status Register |
| FC2MB5_ID_HIGH | $69 | Message Buffer 5 ID High Register |
| FC2MB5_ID_LOW | $6A | Message Buffer 5 ID Low Register |
| FC2MB5_DATA | $6B | Message Buffer 5 Data Register |
| FC2MB5_DATA | $6C | Message Buffer 5 Data Register |
| FC2MB5_DATA | $6D | Message Buffer 5 Data Register |
| FC2MB5_DATA | $6E | Message Buffer 5 Data Register |
| | | Reserved |
| FC2MB6_CONTROL | $70 | Message Buffer 6 Control / Status Register |
| FC2MB6_ID_HIGH | $71 | Message Buffer 6 ID High Register |
| FC2MB6_ID_LOW | $72 | Message Buffer 6 ID Low Register |
| FC2MB6_DATA | $73 | Message Buffer 6 Data Register |
| FC2MB6_DATA | $74 | Message Buffer 6 Data Register |
| FC2MB6_DATA | $75 | Message Buffer 6 Data Register |
| FC2MB6_DATA | $76 | Message Buffer 6 Data Register |
| | | Reserved |
| FC2MB7_CONTROL | $78 | Message Buffer 7 Control / Status Register |
| FC2MB7_ID_HIGH | $79 | Message Buffer 7 ID High Register |
| FC2MB7_ID_LOW | $7A | Message Buffer 7 ID Low Register |
| FC2MB7_DATA | $7B | Message Buffer 7 Data Register |
| FC2MB7_DATA | $7C | Message Buffer 7 Data Register |

**Table 4-39 FlexCAN2 Registers Address Map (Continued)**
**(FC2_BASE = $00 FA00)**
***FlexCAN2 is NOT available in the 56F8165 device***

| Register Acronym | Address Offset | Register Description |
|---|---|---|
| FC2MB7_DATA | $7D | Message Buffer 7 Data Register |
| FC2MB7_DATA | $7E | Message Buffer 7 Data Register |
| | | Reserved |
| FC2MB8_CONTROL | $80 | Message Buffer 8 Contro l /Status Register |
| FC2MB8_ID_HIGH | $81 | Message Buffer 8 ID High Register |
| FC2MB8_ID_LOW | $82 | Message Buffer 8 ID Low Register |
| FC2MB8_DATA | $83 | Message Buffer 8 Data Register |
| FC2MB8_DATA | $84 | Message Buffer 8 Data Register |
| FC2MB8_DATA | $85 | Message Buffer 8 Data Register |
| FC2MB8_DATA | $86 | Message Buffer 8 Data Register |
| | | Reserved |
| FC2MB9_CONTROL | $88 | Message Buffer 9 Control / Status Register |
| FC2MB9_ID_HIGH | $89 | Message Buffer 9 ID High Register |
| FC2MB9_ID_LOW | $8A | Message Buffer 9 ID Low Register |
| FC2MB9_DATA | $8B | Message Buffer 9 Data Register |
| FC2MB9_DATA | $8C | Message Buffer 9 Data Register |
| FC2MB9_DATA | $8D | Message Buffer 9 Data Register |
| FC2MB9_DATA | $8E | Message Buffer 9 Data Register |
| | | Reserved |
| FC2MB10_CONTROL | $90 | Message Buffer 10 Control / Status Register |
| FC2MB10_ID_HIGH | $91 | Message Buffer 10 ID High Register |
| FC2MB10_ID_LOW | $92 | Message Buffer 10 ID Low Register |
| FC2MB10_DATA | $93 | Message Buffer 10 Data Register |
| FC2MB10_DATA | $94 | Message Buffer 10 Data Register |
| FC2MB10_DATA | $95 | Message Buffer 10 Data Register |
| FC2MB10_DATA | $96 | Message Buffer 10 Data Register |
| | | Reserved |
| FC2MB11_CONTROL | $98 | Message Buffer 11 Control / Status Register |
| FC2MB11_ID_HIGH | $99 | Message Buffer 11 ID High Register |
| FC2MB11_ID_LOW | $9A | Message Buffer 11 ID Low Register |
| FC2MB11_DATA | $9B | Message Buffer 11 Data Register |

**Table 4-39 FlexCAN2 Registers Address Map (Continued)**
**(FC2_BASE = $00 FA00)**
***FlexCAN2 is NOT available in the 56F8165 device***

| Register Acronym | Address Offset | Register Description |
|---|---|---|
| FC2MB11_DATA | $9C | Message Buffer 11 Data Register |
| FC2MB11_DATA | $9D | Message Buffer 11 Data Register |
| FC2MB11_DATA | $9E | Message Buffer 11 Data Register |
| | | Reserved |
| FC2MB12_CONTROL | $A0 | Message Buffer 12 Control / Status Register |
| FC2MB12_ID_HIGH | $A1 | Message Buffer 12 ID High Register |
| FC2MB12_ID_LOW | $A2 | Message Buffer 12 ID Low Register |
| FC2MB12_DATA | $A3 | Message Buffer 12 Data Register |
| FC2MB12_DATA | $A4 | Message Buffer 12 Data Register |
| FC2MB12_DATA | $A5 | Message Buffer 12 Data Register |
| FC2MB12_DATA | $A6 | Message Buffer 12 Data Register |
| | | Reserved |
| FC2MB13_CONTROL | $A8 | Message Buffer 13 Control / Status Register |
| FC2MB13_ID_HIGH | $A9 | Message Buffer 13 ID High Register |
| FC2MB13_ID_LOW | $AA | Message Buffer 13 ID Low Register |
| FC2MB13_DATA | $AB | Message Buffer 13 Data Register |
| FC2MB13_DATA | $AC | Message Buffer 13 Data Register |
| FC2MB13_DATA | $AD | Message Buffer 13 Data Register |
| FC2MB13_DATA | $AE | Message Buffer 13 Data Register |
| | | Reserved |
| FC2MB14_CONTROL | $B0 | Message Buffer 14 Control / Status Register |
| FC2MB14_ID_HIGH | $B1 | Message Buffer 14 ID High Register |
| FC2MB14_ID_LOW | $B2 | Message Buffer 14 ID Low Register |
| FC2MB14_DATA | $B3 | Message Buffer 14 Data Register |
| FC2MB14_DATA | $B4 | Message Buffer 14 Data Register |
| FC2MB14_DATA | $B5 | Message Buffer 14 Data Register |
| FC2MB14_DATA | $B6 | Message Buffer 14 Data Register |
| | | Reserved |
| FC2MB15_CONTROL | $B8 | Message Buffer 15 Control / Status Register |
| FC2MB15_ID_HIGH | $B9 | Message Buffer 15 ID High Register |
| FC2MB15_ID_LOW | $BA | Message Buffer 15 ID Low Register |

**Table 4-39 FlexCAN2 Registers Address Map (Continued)**
**(FC2_BASE = $00 FA00)**
***FlexCAN2 is NOT available in the 56F8165 device***

| Register Acronym | Address Offset | Register Description |
|---|---|---|
| FC2MB15_DATA | $BB | Message Buffer 15 Data Register |
| FC2MB15_DATA | $BC | Message Buffer 15 Data Register |
| FC2MB15_DATA | $BD | Message Buffer 15 Data Register |
| FC2MB15_DATA | $BE | Message Buffer 15 Data Register |
| | | Reserved |

## 4.8 Factory Programmed Memory

The Boot Flash memory block is programmed during manufacturing with a default Serial Bootloader program. The Serial Bootloader application can be used to load a user application into the Program and *Data Flash* (*NOT available in the 56F8165*) memories of the device. The **56F83xx SCI/CAN Bootloader User Manual (MC56F83xxBLUM)** provides detailed information on this firmware. An application note, **Production Flash Programming (AN1973),** details how the Serial Bootloader program can be used to perform production Flash programming of the on-board Flash memories, as well as other potential methods.

Like all the Flash memory blocks the Boot Flash can be erased and programmed by the user. The Serial Bootloader application is programmed as an aid to the end user, but is not required to be used or maintained in the Boot Flash memory.

# Part 5 Interrupt Controller (ITCN)

## 5.1 Introduction

The Interrupt Controller (ITCN) module is used to arbitrate between various interrupt requests (IRQs), to signal to the 56800E core when an interrupt of sufficient priority exists, and to what address to jump in order to service this interrupt.

## 5.2 Features

The ITCN module design includes these distinctive features:

- Programmable priority levels for each IRQ
- Two programmable Fast Interrupts
- Notification to SIM module to restart clocks out of Wait and Stop modes
- Drives initial address on the address bus after reset

For further information, see **Table 4-5**, Interrupt Vector Table Contents.

## 5.3 Functional Description

The Interrupt Controller is a slave on the IPBus. It contains registers allowing each of the 86 interrupt sources to be set to one of four priority levels, excluding certain interrupts of fixed priority. Next, all of the interrupt requests of a given level are priority encoded to determine the lowest numerical value of the active interrupt requests for that level. Within a given priority level, 0 is the highest priority, while number 85 is the lowest.

### 5.3.1 Normal Interrupt Handling

Once the ITCN has determined that an interrupt is to be serviced and which interrupt has the highest priority, an interrupt vector address is generated. Normal interrupt handling concatenates the VBA and the vector number to determine the vector address. In this way, an offset is generated into the vector table for each interrupt.

### 5.3.2 Interrupt Nesting

Interrupt exceptions may be nested to allow an IRQ of higher priority than the current exception to be serviced. The following tables define the nesting requirements for each priority level.

**Table 5-1 Interrupt Mask Bit Definition**

| SR[9][1] | SR[8][1] | Permitted Exceptions | Masked Exceptions |
|---|---|---|---|
| 0 | 0 | Priorities 0, 1, 2, 3 | None |
| 0 | 1 | Priorities 1, 2, 3 | Priority 0 |
| 1 | 0 | Priorities 2, 3 | Priorities 0, 1 |
| 1 | 1 | Priority 3 | Priorities 0, 1, 2 |

1. Core status register bits indicating current interrupt mask within the core.

**Table 5-2. Interrupt Priority Encoding**

| IPIC_LEVEL[1:0][1] | Current Interrupt Priority Level | Required Nested Exception Priority |
|---|---|---|
| 00 | No Interrupt or SWILP | Priorities 0, 1, 2, 3 |
| 01 | Priority 0 | Priorities 1, 2, 3 |
| 10 | Priority 1 | Priorities 2, 3 |
| 11 | Priorities 2 or 3 | Priority 3 |

1. See IPIC field definition in Part 5.6.30.2

### 5.3.3 Fast Interrupt Handling

Fast interrupts are described in the **DSP56800E Reference Manual**. The interrupt controller recognizes fast interrupts before the core does.

A fast interrupt is defined (to the ITCN) by:

1. Setting the priority of the interrupt as level 2, with the appropriate field in the IPR registers
2. Setting the FIMn register to the appropriate vector number.
3. Setting the FIVALn and FIVAHn registers with the address of the code for the fast interrupt

When an interrupt occurs, its vector number is compared with the FIM0 and FIM1 register values. If a match occurs, and it is a level 2 interrupt, the ITCN handles it as a fast interrupt. The ITCN takes the vector address from the appropriate FIVALn and FIVAHn registers, instead of generating an address that is an offset from the VBA.

The core then fetches the instruction from the indicated vector adddress and if it is not a JSR, the core starts its fast interrupt handling.

## 5.4 Block Diagram

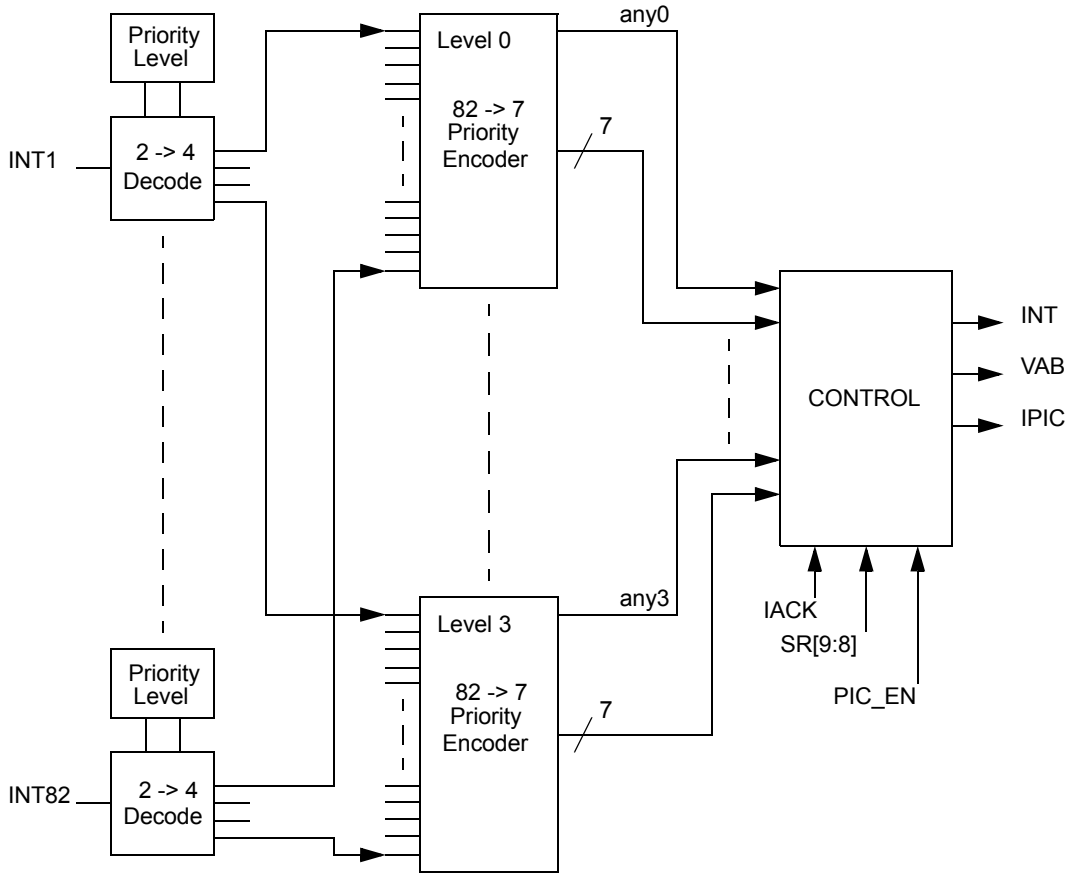


**Figure 5-1 Interrupt Controller Block Diagram**

## 5.5 Operating Modes

The ITCN module design contains two major modes of operation:

- **Functional Mode**
  The ITCN is in this mode by default.
- **Wait and Stop Modes**
  During Wait and Stop modes, the system clocks and the 56800E core are turned off. The ITCN will signal a pending IRQ to the System Integration Module (SIM) to restart the clocks and service the IRQ. An IRQ can only wake up the core if the IRQ is enabled prior to entering the Wait or Stop mode. Also, the $\overline{\text{IRQA}}$ and $\overline{\text{IRQB}}$ signals automatically become low-level sensitive in these modes, even if the control register bits are set to make them falling-edge sensitive. This is because there is no clock available to detect the falling edge.

  A peripheral which requires a clock to generate interrupts will not be able to generate interrupts during Stop mode. The FlexCAN module can wake the device from Stop, and a reset will do just that, or $\overline{\text{IRQA}}$ and $\overline{\text{IRQB}}$ can wake it up.

## 5.6 Register Descriptions

A register address is the sum of a base address and an address offset. The base address is defined at the system level and the address offset is defined at the module level. The ITCN peripheral has 24 registers.

**Table 5-3 ITCN Register Summary (ITCN_BASE = $00F1A0)**

| Register Acronym | Base Address + | Register Name | Section Location |
|---|---|---|---|
| IPR0 | $0 | Interrupt Priority Register 0 | 5.6.1 |
| IPR1 | $1 | Interrupt Priority Register 1 | 5.6.2 |
| IPR2 | $2 | Interrupt Priority Register 2 | 5.6.3 |
| IPR3 | $3 | Interrupt Priority Register 3 | 5.6.4 |
| IPR4 | $4 | Interrupt Priority Register 4 | 5.6.5 |
| IPR5 | $5 | Interrupt Priority Register 5 | 5.6.6 |
| IPR6 | $6 | Interrupt Priority Register 6 | 5.6.7 |
| IPR7 | $7 | Interrupt Priority Register 7 | 5.6.8 |
| IPR8 | $8 | Interrupt Priority Register 8 | 5.6.9 |
| IPR9 | $9 | Interrupt Priority Register 9 | 5.6.10 |
| VBA | $A | Vector Base Address Register | 5.6.11 |
| FIM0 | $B | Fast Interrupt 0 Match Register | 5.6.12 |
| FIVAL0 | $C | Fast Interrupt 0 Vector Address Low Register | 5.6.13 |
| FIVAH0 | $D | Fast Interrupt 0 Vector Address High Register | 5.6.14 |
| FIM1 | $E | Fast Interrupt 1 Match Register | 5.6.15 |
| FIVAL1 | $F | Fast Interrupt 1 Vector Address Low Register | 5.6.16 |
| FIVAH1 | $10 | Fast Interrupt 1 Vector Address High Register | 5.6.17 |

## Table 5-3 ITCN Register Summary (ITCN_BASE = $00F1A0)

| Register Acronym | Base Address + | Register Name | Section Location |
|---|---|---|---|
| IRQP0 | $11 | IRQ Pending Register 0 | 5.6.18 |
| IRQP1 | $12 | IRQ Pending Register 1 | 5.6.19 |
| IRQP2 | $13 | IRQ Pending Register 2 | 5.6.20 |
| IRQP3 | $14 | IRQ Pending Register 3 | 5.6.21 |
| IRQP4 | $15 | IRQ Pending Register 4 | 5.6.22 |
| IRQP5 | $16 | IRQ Pending Register 5 | 5.6.23 |
| Reserved | | | |
| ICTL | $1D | Interrupt Control Register | 5.6.30 |
| Reserved | | | |
| IPR10 | $1F | Interrupt Priority Register 10 | 5.6.32 |

***Note:*** *IPR10 is NOT available in the 56F8165 device.*

| Add. Offset | Register Name | | 15 | 14 | 13 | 12 | 11 | 10 | 9 | 8 | 7 | 6 | 5 | 4 | 3 | 2 | 1 | 0 |
|---|---|---|---|---|---|---|---|---|---|---|---|---|---|---|---|---|---|---|
| $0 | IPR0 | R | 0 | 0 | BKPT_U0 IPL | | STPCNT IPL | | 0 | 0 | 0 | 0 | 0 | 0 | 0 | 0 | 0 | 0 |
| | | W | | | | | | | | | | | | | | | | |
| $1 | IPR1 | R | 0 | 0 | 0 | 0 | 0 | 0 | 0 | 0 | 0 | 0 | RX_REG IPL | | TX_REG IPL | | TRBUF IPL | |
| | | W | | | | | | | | | | | | | | | | |
| $2 | IPR2 | R | FMCBE IPL | | FMCC IPL | | FMERR IPL | | LOCK IPL | | LVI IPL | | 0 | 0 | IRQB IPL | | IRQA IPL | |
| | | W | | | | | | | | | | | | | | | | |
| $3 | IPR3 | R | GPIOD IPL | | GPIOE IPL | | GPIOF IPL | | FCMSGBUF IPL | | FCWKUP IPL | | FCERR IPL | | FCBOFF IPL | | 0 | 0 |
| | | W | | | | | | | | | | | | | | | | |
| $4 | IPR4 | R | SPI0_RCV IPL | | SPI1_XMIT IPL | | SPI1_RCV IPL | | 0 | 0 | 0 | 0 | GPIOA IPL | | GPIOB IPL | | GPIOC IPL | |
| | | W | | | | | | | | | | | | | | | | |
| $5 | IPR5 | R | DEC1_XIRQ IPL | | DEC1_HIRQ IPL | | SCI1_RCV IPL | | SCI1_RERR IPL | | 0 | 0 | SCI1_TIDL IPL | | SCI1_XMIT IPL | | SPI0_XMIT IPL | |
| | | W | | | | | | | | | | | | | | | | |
| $6 | IPR6 | R | TMRC0 IPL | | TMRD3 IPL | | TMRD2 IPL | | TMRD1 IPL | | TMRD0 IPL | | 0 | 0 | DEC0_XIRQ IPL | | DEC0_HIRQ IPL | |
| | | W | | | | | | | | | | | | | | | | |
| $7 | IPR7 | R | TMRA0 IPL | | TMRB3 IPL | | TMRB2 IPL | | TMRB1 IPL | | TMRB0 IPL | | TMRC3 IPL | | TMRC2 IPL | | TMRC1 IPL | |
| | | W | | | | | | | | | | | | | | | | |
| $8 | IPR8 | R | SCI0_RCV IPL | | SCI0_RERR IPL | | 0 | 0 | SCI0_TIDL IPL | | SCI0_XMIT IPL | | TMRA3 IPL | | TMRA2 IPL | | TMRA1 IPL | |
| | | W | | | | | 0 | 0 | | | | | | | | | | |
| $9 | IPR9 | R | PWMA_F IPL | | PWMB_F IPL | | PWMA_RL IPL | | PWMB_RL IPL | | ADCA_ZC IPL | | ABCB_ZC IPL | | ADCA_CC IPL | | ADCB_CC IPL | |
| | | W | | | | | | | | | | | | | | | | |
| $A | VBA | R | 0 | 0 | 0 | VECTOR BASE ADDRESS | | | | | | | | | | | | |
| | | W | | | | | | | | | | | | | | | | |
| $B | FIM0 | R | 0 | 0 | 0 | 0 | 0 | 0 | 0 | 0 | 0 | FAST INTERRUPT 0 | | | | | | |
| | | W | | | | | | | | | | | | | | | | |
| $C | FIVAL0 | R | FAST INTERRUPT 0 VECTOR ADDRESS LOW | | | | | | | | | | | | | | | |
| | | W | | | | | | | | | | | | | | | | |
| $D | FIVAH0 | R | 0 | 0 | 0 | 0 | 0 | 0 | 0 | 0 | 0 | 0 | 0 | FAST INTERRUPT 0 VECTOR ADDRESS HIGH | | | | |
| | | W | | | | | | | | | | | | | | | | |
| $E | FIM1 | R | 0 | 0 | 0 | 0 | 0 | 0 | 0 | 0 | 0 | FAST INTERRUPT 1 | | | | | | |
| | | W | 0 | 0 | 0 | 0 | 0 | 0 | 0 | 0 | 0 | | | | | | | |
| $F | FIVAL1 | R | FAST INTERRUPT 1 VECTOR ADDRESS LOW | | | | | | | | | | | | | | | |
| | | W | | | | | | | | | | | | | | | | |
| $10 | FIVAH1 | R | 0 | 0 | 0 | 0 | 0 | 0 | 0 | 0 | 0 | 0 | 0 | FAST INTERRUPT 1 VECTOR ADDRESS HIGH | | | | |
| | | W | 0 | 0 | 0 | 0 | 0 | 0 | 0 | 0 | 0 | 0 | 0 | | | | | |
| $11 | IRQP0 | R | PENDING [16:2] | | | | | | | | | | | | | | | 1 |
| | | W | | | | | | | | | | | | | | | | |
| $12 | IRQP1 | R | PENDING [32:17] | | | | | | | | | | | | | | | |
| | | W | | | | | | | | | | | | | | | | |
| $13 | IRQP2 | R | PENDING [48:33] | | | | | | | | | | | | | | | |
| | | W | | | | | | | | | | | | | | | | |
| $14 | IRQP3 | R | PENDING [64:49] | | | | | | | | | | | | | | | |
| | | W | | | | | | | | | | | | | | | | |
| $15 | IRQP4 | R | PENDING [80:65] | | | | | | | | | | | | | | | |
| | | W | | | | | | | | | | | | | | | | |
| $16 | IRQP5 | R | 1 | 1 | 1 | 1 | 1 | 1 | 1 | 1 | 1 | 1 | 1 | 1 | 1 | 1 | 1 | PENDING [81] |
| | | W | | | | | | | | | | | | | | | | |
| | Reserved | | | | | | | | | | | | | | | | | |
| $1D | ICTL | R | INT | IPIC | | VAB | | | | | | | INT_DIS | 1 | IRQB STATE | IRQA STATE | $\overline{\text{IRQB}}$ EDG | $\overline{\text{IRQA}}$ EDG |
| | | W | | | | | | | | | | | | | | | | |
| | Reserved | | | | | | | | | | | | | | | | | |
| $1F | IPR10 | R | 0 | 0 | 0 | 0 | 0 | 0 | 0 | 0 | FLEXCAN2 MSGBUF IPL | | FLEXCAN2 WKUP IPL | | FLEXCAN2 ERR IPL | | FLEXCAN2 BOFF IPL | |
| | | W | | | | | | | | | | | | | | | | |

= Reserved

**Figure 5-2 ITCN Register Map Summary**

## 5.6.1 Interrupt Priority Register 0 (IPR0)

| Base + $0 | 15 | 14 | 13 | 12 | 11 | 10 | 9 | 8 | 7 | 6 | 5 | 4 | 3 | 2 | 1 | 0 |
|---|---|---|---|---|---|---|---|---|---|---|---|---|---|---|---|---|
| Read | 0 | 0 | BKPT_U0IPL | | STPCNT IPL | | 0 | 0 | 0 | 0 | 0 | 0 | 0 | 0 | 0 | 0 |
| Write | | | | | | | | | | | | | | | | |
| RESET | 0 | 0 | 0 | 0 | 0 | 0 | 0 | 0 | 0 | 0 | 0 | 0 | 0 | 0 | 0 | 0 |

**Figure 5-3 Interrupt Priority Register 0 (IPR0)**

### 5.6.1.1 Reserved—Bits 15–14

This bit field is reserved or not implemented. It is read as 0 and cannot be modified by writing.

### 5.6.1.2 EOnCE Breakpoint Unit 0 Interrupt Priority Level (BKPT_U0 IPL)—Bits13–12

This field is used to set the interrupt priority levels for IRQs. This IRQ is limited to priorities 1 through 3. It is disabled by default.

- 00 = IRQ disabled (default)
- 01 = IRQ is priority level 1
- 10 = IRQ is priority level 2
- 11 = IRQ is priority level 3

### 5.6.1.3 EOnCE Step Counter Interrupt Priority Level (STPCNT IPL)—Bits 11–10

This field is used to set the interrupt priority level for IRQs. This IRQ is limited to priorities 1 through 3. It is disabled by default.

- 00 = IRQ disabled (default)
- 01 = IRQ is priority level 1
- 10 = IRQ is priority level 2
- 11 = IRQ is priority level 3

### 5.6.1.4 Reserved—Bits 9–0

This bit field is reserved or not implemented. It is read as 0 and cannot be modified by writing.

## 5.6.2 Interrupt Priority Register 1 (IPR1)

| Base + $1 | 15 | 14 | 13 | 12 | 11 | 10 | 9 | 8 | 7 | 6 | 5 | 4 | 3 | 2 | 1 | 0 |
|---|---|---|---|---|---|---|---|---|---|---|---|---|---|---|---|---|
| Read | 0 | 0 | 0 | 0 | 0 | 0 | 0 | 0 | 0 | 0 | RX_REG IPL | | TX_REG IPL | | TRBUF IPL | |
| Write | | | | | | | | | | | | | | | | |
| RESET | 0 | 0 | 0 | 0 | 0 | 0 | 0 | 0 | 0 | 0 | 0 | 0 | 0 | 0 | 0 | 0 |

**Figure 5-4 Interrupt Priority Register 1 (IPR1)**

### 5.6.2.1 Reserved—Bits 15–6

This bit field is reserved or not implemented. It is read as 0 and cannot be modified by writing.

### 5.6.2.2 EOnCE Receive Register Full Interrupt Priority Level (RX_REG IPL)—Bits 5–4

This field is used to set the interrupt priority level for IRQs. This IRQ is limited to priorities 1 through 3. It is disabled by default.

- 00 = IRQ disabled (default)
- 01 = IRQ is priority level 1
- 10 = IRQ is priority level 2
- 11 = IRQ is priority level 3

### 5.6.2.3 EOnCE Transmit Register Empty Interrupt Priority Level (TX_REG IPL)—Bits 3–2

This field is used to set the interrupt priority level for IRQs. This IRQ is limited to priorities 1 through 3. It is disabled by default.

- 00 = IRQ disabled (default)
- 01 = IRQ is priority level 1
- 10 = IRQ is priority level 2
- 11 = IRQ is priority level 3

### 5.6.2.4 EOnCE Trace Buffer Interrupt Priority Level (TRBUF IPL)—Bits 1–0

This field is used to set the interrupt priority level for IRQs. This IRQ is limited to priorities 1 through 3. It is disabled by default.

- 00 = IRQ disabled (default)
- 01 = IRQ is priority level 1
- 10 = IRQ is priority level 2
- 11 = IRQ is priority level 3

## 5.6.3 Interrupt Priority Register 2 (IPR2)

| Base + $2 | 15 | 14 | 13 | 12 | 11 | 10 | 9 | 8 | 7 | 6 | 5 | 4 | 3 | 2 | 1 | 0 |
|---|---|---|---|---|---|---|---|---|---|---|---|---|---|---|---|---|
| Read | FMCBE IPL | | FMCC IPL | | FMERR IPL | | LOCK IPL | | LVI IPL | | 0 | 0 | IRQB IPL | | IRQA IPL | |
| Write | | | | | | | | | | | | | | | | |
| RESET | 0 | 0 | 0 | 0 | 0 | 0 | 0 | 0 | 0 | 0 | 0 | 0 | 0 | 0 | 0 | 0 |

**Figure 5-5 Interrupt Priority Register 2 (IPR2)**

### 5.6.3.1 Flash Memory Command, Data, Address Buffers Empty Interrupt Priority Level (FMCBE IPL)—Bits 15–14

This field is used to set the interrupt priority level for IRQs. This IRQ is limited to priorities 0 through 2. It is disabled by default.

- 00 = IRQ disabled (default)
- 01 = IRQ is priority level 0
- 10 = IRQ is priority level 1
- 11 = IRQ is priority level 2

### 5.6.3.2 Flash Memory Command Complete Priority Level (FMCC IPL)—Bits 13–12

This field is used to set the interrupt priority level for IRQs. This IRQ is limited to priorities 0 through 2. It is disabled by default.

- 00 = IRQ disabled (default)
- 01 = IRQ is priority level 0
- 10 = IRQ is priority level 1
- 11 = IRQ is priority level 2

### 5.6.3.3 Flash Memory Error Interrupt Priority Level (FMERR IPL)—Bits 11–10

This field is used to set the interrupt priority level for IRQs. This IRQ is limited to priorities 0 through 2. It is disabled by default.

- 00 = IRQ disabled (default)
- 01 = IRQ is priority level 0
- 10 = IRQ is priority level 1
- 11 = IRQ is priority level 2

### 5.6.3.4 PLL Loss of Lock Interrupt Priority Level (LOCK IPL)—Bits 9–8

This field is used to set the interrupt priority level for IRQs. This IRQ is limited to priorities 0 through 2. It is disabled by default.

- 00 = IRQ disabled (default)

- 01 = IRQ is priority level 0
- 10 = IRQ is priority level 1
- 11 = IRQ is priority level 2

#### 5.6.3.5 Low Voltage Detector Interrupt Priority Level (LVI IPL)—Bits 7–6

This field is used to set the interrupt priority level for IRQs. This IRQ is limited to priorities 0 through 2. It is disabled by default.

- 00 = IRQ disabled (default)
- 01 = IRQ is priority level 0
- 10 = IRQ is priority level 1
- 11 = IRQ is priority level 2

#### 5.6.3.6 Reserved—Bits 5–4

This bit field is reserved or not implemented. It is read as 0 and cannot be modified by writing.

#### 5.6.3.7 External IRQ B Interrupt Priority Level (IRQB IPL)—Bits 3–2

This field is used to set the interrupt priority level for IRQs. This IRQ is limited to priorities 0 through 2. It is disabled by default.

- 00 = IRQ disabled (default)
- 01 = IRQ is priority level 0
- 10 = IRQ is priority level 1
- 11 = IRQ is priority level 2

#### 5.6.3.8 External IRQ A Interrupt Priority Level (IRQA IPL)—Bits 1–0

This field is used to set the interrupt priority level for IRQs. This IRQ is limited to priorities 0 through 2. It is disabled by default.

- 00 = IRQ disabled (default)
- 01 = IRQ is priority level 0
- 10 = IRQ is priority level 1
- 11 = IRQ is priority level 2

### 5.6.4 Interrupt Priority Register 3 (IPR3)

| Base + $3 | 15 | 14 | 13 | 12 | 11 | 10 | 9 | 8 | 7 | 6 | 5 | 4 | 3 | 2 | 1 | 0 |
|---|---|---|---|---|---|---|---|---|---|---|---|---|---|---|---|---|
| Read | GPIOD IPL | | GPIOE IPL | | GPIOF IPL | | FCMSGBUF IPL | | FCWKUP IPL | | FCERR IPL | | FCBOFF IPL | | 0 | 0 |
| Write | | | | | | | | | | | | | | | | |
| RESET | 0 | 0 | 0 | 0 | 0 | 0 | 0 | 0 | 0 | 0 | 0 | 0 | 0 | 0 | 0 | 0 |

**Figure 5-6 Interrupt Priority Register 3 (IPR3)**

#### 5.6.4.1 GPIOD Interrupt Priority Level (GPIOD IPL)—Bits 15–14

This field is used to set the interrupt priority level for IRQs. This IRQ is limited to priorities 0 through 2. They are disabled by default.

- 00 = IRQ disabled (default)
- 01 = IRQ is priority level 0
- 10 = IRQ is priority level 1
- 11 = IRQ is priority level 2

#### 5.6.4.2 GPIOE Interrupt Priority Level (GPIOE IPL)—Bits 13–12

This field is used to set the interrupt priority level for IRQs. This IRQ is limited to priorities 0 through 2. They are disabled by default.

- 00 = IRQ disabled (default)
- 01 = IRQ is priority level 0
- 10 = IRQ is priority level 1
- 11 = IRQ is priority level 2

#### 5.6.4.3 GPIOF Interrupt Priority Level (GPIOF IPL)—Bits 11–10

This field is used to set the interrupt priority level for IRQs. This IRQ is limited to priorities 0 through 2. They are disabled by default.

- 00 = IRQ disabled (default)
- 01 = IRQ is priority level 0
- 10 = IRQ is priority level 1
- 11 = IRQ is priority level 2

#### 5.6.4.4 FlexCAN Message Buffer Interrupt Priority Level (FCMSGBUF IPL)—Bits 9–8

This field is used to set the interrupt priority level for IRQs. This IRQ is limited to priorities 0 through 2. They are disabled by default.

- 00 = IRQ disabled (default)
- 01 = IRQ is priority level 0
- 10 = IRQ is priority level 1
- 11 = IRQ is priority level 2

#### 5.6.4.5 FlexCAN Wake Up Interrupt Priority Level (FCWKUP IPL)—Bits 7–6

This field is used to set the interrupt priority level for IRQs. This IRQ is limited to priorities 0 through 2. They are disabled by default.

- 00 = IRQ disabled (default)
- 01 = IRQ is priority level 0

- 10 = IRQ is priority level 1
- 11 = IRQ is priority level 2

#### 5.6.4.6 FlexCAN Error Interrupt Priority Level (FCERR IPL)— Bits 5–4

This field is used to set the interrupt priority level for IRQs. This IRQ is limited to priorities 0 through 2. They are disabled by default.

- 00 = IRQ disabled (default)
- 01 = IRQ is priority level 0
- 10 = IRQ is priority level 1
- 11 = IRQ is priority level 2

#### 5.6.4.7 FlexCAN Bus Off Interrupt Priority Level (FCBOFF IPL)— Bits 3–2

This field is used to set the interrupt priority level for IRQs. This IRQ is limited to priorities 0 through 2. They are disabled by default.

- 00 = IRQ disabled (default)
- 01 = IRQ is priority level 0
- 10 = IRQ is priority level 1
- 11 = IRQ is priority level 2

#### 5.6.4.8 Reserved—Bits 1–0

This bit field is reserved or not implemented. It is read as 0 and cannot be modified by writing.

### 5.6.5 Interrupt Priority Register 4 (IPR4)

| Base + $4 | 15 | 14 | 13 | 12 | 11 | 10 | 9 | 8 | 7 | 6 | 5 | 4 | 3 | 2 | 1 | 0 |
|---|---|---|---|---|---|---|---|---|---|---|---|---|---|---|---|---|
| Read | SPI0_RCV IPL | | SPI1_XMIT IPL | | SPI1_RCV IPL | | 0 | 0 | 0 | 0 | GPIOA IPL | | GPIOB IPL | | GPIOC IPL | |
| Write | | | | | | | | | | | | | | | | |
| RESET | 0 | 0 | 0 | 0 | 0 | 0 | 0 | 0 | 0 | 0 | 0 | 0 | 0 | 0 | 0 | 0 |

**Figure 5-7 Interrupt Priority Register 4 (IPR4)**

#### 5.6.5.1 SPI 0 Receiver Full Interrupt Priority Level (SPI0_RCV IPL)—Bits 15–14

This field is used to set the interrupt priority level for IRQs. This IRQ is limited to priorities 0 through 2. They are disabled by default.

- 00 = IRQ disabled (default)
- 01 = IRQ is priority level 0
- 10 = IRQ is priority level 1
- 11 = IRQ is priority level 2

#### 5.6.5.2 SPI 1 Transmit Empty Interrupt Priority Level (SPI1_XMIT IPL)—Bits 13–12

This field is used to set the interrupt priority level for IRQs. This IRQ is limited to priorities 0 through 2. They are disabled by default.

- 00 = IRQ disabled (default)
- 01 = IRQ is priority level 0
- 10 = IRQ is priority level 1
- 11 = IRQ is priority level 2

#### 5.6.5.3 SPI 1 Receiver Full Interrupt Priority Level (SPI1_RCV IPL)—Bits 11–10

This field is used to set the interrupt priority level for IRQs. This IRQ is limited to priorities 0 through 2. They are disabled by default.

- 00 = IRQ disabled (default)
- 01 = IRQ is priority level 0
- 10 = IRQ is priority level 1
- 11 = IRQ is priority level 2

#### 5.6.5.4 Reserved—Bits 9–6

This bit field is reserved or not implemented. It is read as 0 and cannot be modified by writing.

#### 5.6.5.5 GPIOA Interrupt Priority Level (GPIOA IPL)—Bits 5–4

This field is used to set the interrupt priority level for IRQs. This IRQ is limited to priorities 0 through 2. They are disabled by default.

- 00 = IRQ disabled (default)
- 01 = IRQ is priority level 0
- 10 = IRQ is priority level 1
- 11 = IRQ is priority level 2

#### 5.6.5.6 GPIOB Interrupt Priority Level (GPIOB IPL)—Bits 3–2

This field is used to set the interrupt priority level for IRQs. This IRQ is limited to priorities 0 through 2. They are disabled by default.

- 00 = IRQ disabled (default)
- 01 = IRQ is priority level 0
- 10 = IRQ is priority level 1
- 11 = IRQ is priority level 2

#### 5.6.5.7 GPIOC Interrupt Priority Level (GPIOC IPL)—Bits 1–0

This field is used to set the interrupt priority level for IRQs. This IRQ is limited to priorities 0 through 2.

They are disabled by default.

- 00 = IRQ disabled (default)
- 01 = IRQ is priority level 0
- 10 = IRQ is priority level 1
- 11 = IRQ is priority level 2

## 5.6.6 Interrupt Priority Register 5 (IPR5)

| Base + $5 | 15 | 14 | 13 | 12 | 11 | 10 | 9 | 8 | 7 | 6 | 5 | 4 | 3 | 2 | 1 | 0 |
|---|---|---|---|---|---|---|---|---|---|---|---|---|---|---|---|---|
| Read | DEC1_XIRQ IPL | | DEC1_HIRQ IPL | | SCI1_RCV IPL | | SCI1_RERR IPL | | 0 | 0 | SCI1_TIDL IPL | | SCI1_XMIT IPL | | SPI0_XMIT IPL | |
| Write | | | | | | | | | | | | | | | | |
| RESET | 0 | 0 | 0 | 0 | 0 | 0 | 0 | 0 | 0 | 0 | 0 | 0 | 0 | 0 | 0 | 0 |

**Figure 5-8 Interrupt Priority Register 5 (IPR5)**

### 5.6.6.1 Quadrature Decoder 1 INDEX Pulse Interrupt Priority Level (DEC1_XIRQ IPL)—Bits 15–14

This field is used to set the interrupt priority level for IRQs. This IRQ is limited to priorities 0 through 2. They are disabled by default.

- 00 = IRQ disabled (default)
- 01 = IRQ is priority level 0
- 10 = IRQ is priority level 1
- 11 = IRQ is priority level 2

### 5.6.6.2 Quadrature Decoder 1 HOME Signal Transition or Watchdog Timer Interrupt Priority Level (DEC1_HIRQ IPL)—Bits 13–12

This field is used to set the interrupt priority level for IRQs. This IRQ is limited to priorities 0 through 2. They are disabled by default.

- 00 = IRQ disabled (default)
- 01 = IRQ is priority level 0
- 10 = IRQ is priority level 1
- 11 = IRQ is priority level 2

### 5.6.6.3 SCI 1 Receiver Full Interrupt Priority Level (SCI1_RCV IPL)—Bits 11–10

This field is used to set the interrupt priority level for IRQs. This IRQ is limited to priorities 0 through 2. They are disabled by default.

- 00 = IRQ disabled (default)
- 01 = IRQ is priority level 0
- 10 = IRQ is priority level 1
- 11 = IRQ is priority level 2

#### 5.6.6.4 SCI 1 Receiver Error Interrupt Priority Level (SCI1_RERR IPL)—Bits 9–8

This field is used to set the interrupt priority level for IRQs. This IRQ is limited to priorities 0 through 2. They are disabled by default.

- 00 = IRQ disabled (default)
- 01 = IRQ is priority level 0
- 10 = IRQ is priority level 1
- 11 = IRQ is priority level 2

#### 5.6.6.5 Reserved—Bits 7–6

This bit field is reserved or not implemented. It is read as 0 and cannot be modified by writing.

#### 5.6.6.6 SCI 1 Transmitter Idle Interrupt Priority Level (SCI1_TIDL IPL)—Bits 5–4

This field is used to set the interrupt priority level for IRQs. This IRQ is limited to priorities 0 through 2. They are disabled by default.

- 00 = IRQ disabled (default)
- 01 = IRQ is priority level 0
- 10 = IRQ is priority level 1
- 11 = IRQ is priority level 2

#### 5.6.6.7 SCI 1 Transmitter Empty Interrupt Priority Level (SCI1_XMIT IPL)—Bits 3–2

This field is used to set the interrupt priority level for IRQs. This IRQ is limited to priorities 0 through 2. They are disabled by default.

- 00 = IRQ disabled (default)
- 01 = IRQ is priority level 0
- 10 = IRQ is priority level 1
- 11 = IRQ is priority level 2

#### 5.6.6.8 SPI 0 Transmitter Empty Interrupt Priority Level (SPI0_XMIT IPL)—Bits 1–0

This field is used to set the interrupt priority level for IRQs. This IRQ is limited to priorities 0 through 2. They are disabled by default.

- 00 = IRQ disabled (default)
- 01 = IRQ is priority level 0
- 10 = IRQ is priority level 1
- 11 = IRQ is priority level 2

## 5.6.7 Interrupt Priority Register 6 (IPR6)

| Base + $6 | 15 | 14 | 13 | 12 | 11 | 10 | 9 | 8 | 7 | 6 | 5 | 4 | 3 | 2 | 1 | 0 |
|---|---|---|---|---|---|---|---|---|---|---|---|---|---|---|---|---|
| Read | TMRC0 IPL | | TMRD3 IPL | | TMRD2 IPL | | TMRD1 IPL | | TMRD0 IPL | | 0 | 0 | DEC0_XIRQ IPL | | DEC0_HIRQ IPL | |
| Write | | | | | | | | | | | | | | | | |
| RESET | 0 | 0 | 0 | 0 | 0 | 0 | 0 | 0 | 0 | 0 | 0 | 0 | 0 | 0 | 0 | 0 |

**Figure 5-9 Interrupt Priority Register 6 (IPR6)**

### 5.6.7.1 Timer C, Channel 0 Interrupt Priority Level (TMRC0 IPL)—Bits 15–14

This field is used to set the interrupt priority level for IRQs. This IRQ is limited to priorities 0 through 2. They are disabled by default.

- 00 = IRQ disabled (default)
- 01 = IRQ is priority level 0
- 10 = IRQ is priority level 1
- 11 = IRQ is priority level 2

### 5.6.7.2 Timer D, Channel 3 Interrupt Priority Level (TMRD3 IPL)—Bits 13–12

This field is used to set the interrupt priority level for IRQs. This IRQ is limited to priorities 0 through 2. They are disabled by default.

- 00 = IRQ disabled (default)
- 01 = IRQ is priority level 0
- 10 = IRQ is priority level 1
- 11 = IRQ is priority level 2

### 5.6.7.3 Timer D, Channel 2 Interrupt Priority Level (TMRD2 IPL)—Bits 11–10

This field is used to set the interrupt priority level for IRQs. This IRQ is limited to priorities 0 through 2. They are disabled by default.

- 00 = IRQ disabled (default)
- 01 = IRQ is priority level 0
- 10 = IRQ is priority level 1
- 11 = IRQ is priority level 2

### 5.6.7.4 Timer D, Channel 1 Interrupt Priority Level (TMRD1 IPL)—Bits 9–8

This field is used to set the interrupt priority level for IRQs. This IRQ is limited to priorities 0 through 2. They are disabled by default.

- 00 = IRQ disabled (default)
- 01 = IRQ is priority level 0
- 10 = IRQ is priority level 1
- 11 = IRQ is priority level 2

#### 5.6.7.5 Timer D, Channel 0 Interrupt Priority Level (TMRD0 IPL)—Bits 7–6

This field is used to set the interrupt priority level for IRQs. This IRQ is limited to priorities 0 through 2. They are disabled by default.

- 00 = IRQ disabled (default)
- 01 = IRQ is priority level 0
- 10 = IRQ is priority level 1
- 11 = IRQ is priority level 2

#### 5.6.7.6 Reserved—Bits 5–4

This bit field is reserved or not implemented. It is read as 0 and cannot be modified by writing.

#### 5.6.7.7 Quadrature Decoder 0 INDEX Pulse Interrupt Priority Level (DEC0_XIRQ IPL)—Bits 3–2

This field is used to set the interrupt priority level for IRQs. This IRQ is limited to priorities 0 through 2. They are disabled by default.

- 00 = IRQ disabled (default)
- 01 = IRQ is priority level 0
- 10 = IRQ is priority level 1
- 11 = IRQ is priority level 2

#### 5.6.7.8 Quadrature Decoder 0, HOME Signal Transition or Watchdog Timer Interrupt Priority Level (DEC0_HIRQ IPL)—Bits 1–0

This field is used to set the interrupt priority level for IRQs. This IRQ is limited to priorities 0 through 2. They are disabled by default.

- 00 = IRQ disabled (default)
- 01 = IRQ is priority level 0
- 10 = IRQ is priority level 1
- 11 = IRQ is priority level 2

### 5.6.8 Interrupt Priority Register 7 (IPR7)

| Base + $7 | 15 | 14 | 13 | 12 | 11 | 10 | 9 | 8 | 7 | 6 | 5 | 4 | 3 | 2 | 1 | 0 |
|---|---|---|---|---|---|---|---|---|---|---|---|---|---|---|---|---|
| Read<br>Write | TMRA0 IPL | | TMRB3 IPL | | TMRB2 IPL | | TMRB1 IPL | | TMRB0 IPL | | TMRC3 IPL | | TMRC2 IPL | | TMRC1 IPL | |
| RESET | 0 | 0 | 0 | 0 | 0 | 0 | 0 | 0 | 0 | 0 | 0 | 0 | 0 | 0 | 0 | 0 |

**Figure 5-10 Interrupt Priority Register (IPR7)**

#### 5.6.8.1 Timer A, Channel 0 Interrupt Priority Level (TMRA0 IPL)—Bits 15–14

This field is used to set the interrupt priority level for IRQs. This IRQ is limited to priorities 0 through 2. They are disabled by default.

- 00 = IRQ disabled (default)
- 01 = IRQ is priority level 0
- 10 = IRQ is priority level 1
- 11 = IRQ is priority level 2

#### 5.6.8.2 Timer B, Channel 3 Interrupt Priority Level (TMRB3 IPL)—Bits 13–12

This field is used to set the interrupt priority level for IRQs. This IRQ is limited to priorities 0 through 2. They are disabled by default.

- 00 = IRQ disabled (default)
- 01 = IRQ is priority level 0
- 10 = IRQ is priority level 1
- 11 = IRQ is priority level 2

#### 5.6.8.3 Timer B, Channel 2 Interrupt Priority Level (TMRB2 IPL)—Bits 11–10

This field is used to set the interrupt priority level for IRQs. This IRQ is limited to priorities 0 through 2. They are disabled by default.

- 00 = IRQ disabled (default)
- 01 = IRQ is priority level 0
- 10 = IRQ is priority level 1
- 11 = IRQ is priority level 2

#### 5.6.8.4 Timer B, Channel 1 Interrupt Priority Level (TMRB1 IPL)—Bits 9–8

This field is used to set the interrupt priority level for IRQs. This IRQ is limited to priorities 0 through 2. They are disabled by default.

- 00 = IRQ disabled (default)
- 01 = IRQ is priority level 0
- 10 = IRQ is priority level 1
- 11 = IRQ is priority level 2

#### 5.6.8.5 Timer B, Channel 0 Interrupt Priority Level (TMRB0 IPL)—Bits 7–6

This field is used to set the interrupt priority level for IRQs. This IRQ is limited to priorities 0 through 2. They are disabled by default.

- 00 = IRQ disabled (default)
- 01 = IRQ is priority level 0

- 10 = IRQ is priority level 1
- 11 = IRQ is priority level 2

#### 5.6.8.6 Timer C, Channel 3 Interrupt Priority Level (TMRC3 IPL)—Bits 5–4

This field is used to set the interrupt priority level for IRQs. This IRQ is limited to priorities 0 through 2. They are disabled by default.

- 00 = IRQ disabled (default)
- 01 = IRQ is priority level 0
- 10 = IRQ is priority level 1
- 11 = IRQ is priority level 2

#### 5.6.8.7 Timer C, Channel 2 Interrupt Priority Level (TMRC2 IPL)—Bits 3–2

This field is used to set the interrupt priority level for IRQs. This IRQ is limited to priorities 0 through 2. They are disabled by default.

- 00 = IRQ disabled (default)
- 01 = IRQ is priority level 0
- 10 = IRQ is priority level 1
- 11 = IRQ is priority level 2

#### 5.6.8.8 Timer C, Channel 1 Interrupt Priority Level (TMRC1 IPL)—Bits 1–0

This field is used to set the interrupt priority level for IRQs. This IRQ is limited to priorities 0 through 2. They are disabled by default.

- 00 = IRQ disabled (default)
- 01 = IRQ is priority level 0
- 10 = IRQ is priority level 1
- 11 = IRQ is priority level 2

### 5.6.9 Interrupt Priority Register 8 (IPR8)

| Base + $8 | 15 | 14 | 13 | 12 | 11 | 10 | 9 | 8 | 7 | 6 | 5 | 4 | 3 | 2 | 1 | 0 |
|---|---|---|---|---|---|---|---|---|---|---|---|---|---|---|---|---|
| Read | SCI0_RCV IPL | | SCI0_RERR IPL | | 0 | 0 | SCI0_TIDL IPL | | SCI0_XMIT IPL | | TMRA3 IPL | | TMRA2 IPL | | TMRA1 IPL | |
| Write | | | | | | | | | | | | | | | | |
| RESET | 0 | 0 | 0 | 0 | 0 | 0 | 0 | 0 | 0 | 0 | 0 | 0 | 0 | 0 | 0 | 0 |

**Figure 5-11 Interrupt Priority Register 8 (IPR8)**

#### 5.6.9.1 SCI0 Receiver Full Interrupt Priority Level (SCI0_RCV IPL)—Bits 15–14

This field is used to set the interrupt priority level for IRQs. This IRQ is limited to priorities 0 through 2. They are disabled by default.

- 00 = IRQ disabled (default)

- 01 = IRQ is priority level 0
- 10 = IRQ is priority level 1
- 11 = IRQ is priority level 2

#### 5.6.9.2 SCI0 Receiver Error Interrupt Priority Level (SCI0_RERR IPL)—Bits 13–12

This field is used to set the interrupt priority level for IRQs. This IRQ is limited to priorities 0 through 2. They are disabled by default.

- 00 = IRQ disabled (default)
- 01 = IRQ is priority level 0
- 10 = IRQ is priority level 1
- 11 = IRQ is priority level 2

#### 5.6.9.3 Reserved—Bits 11–10

This bit field is reserved or not implemented. It is read as 0 and cannot be modified by writing.

#### 5.6.9.4 SCI0 Transmitter Idle Interrupt Priority Level (SCI0_TIDL IPL)—Bits 9–8

This field is used to set the interrupt priority level for IRQs. This IRQ is limited to priorities 0 through 2. They are disabled by default.

- 00 = IRQ disabled (default)
- 01 = IRQ is priority level 0
- 10 = IRQ is priority level 1
- 11 = IRQ is priority level 2

#### 5.6.9.5 SCI0 Transmitter Empty Interrupt Priority Level (SCI0_XMIT IPL)—Bits 7–6

This field is used to set the interrupt priority level for IRQs. This IRQ is limited to priorities 0 through 2. They are disabled by default.

- 00 = IRQ disabled (default)
- 01 = IRQ is priority level 0
- 10 = IRQ is priority level 1
- 11 = IRQ is priority level 2

#### 5.6.9.6 Timer A, Channel 3 Interrupt Priority Level (TMRA3 IPL)—Bits 5–4

This field is used to set the interrupt priority level for IRQs. This IRQ is limited to priorities 0 through 2. They are disabled by default.

- 00 = IRQ disabled (default)
- 01 = IRQ is priority level 0

- 10 = IRQ is priority level 1
- 11 = IRQ is priority level 2

#### 5.6.9.7 Timer A, Channel 2 Interrupt Priority Level (TMRA2 IPL)—Bits 3–2

This field is used to set the interrupt priority level for IRQs. This IRQ is limited to priorities 0 through 2. They are disabled by default.

- 00 = IRQ disabled (default)
- 01 = IRQ is priority level 0
- 10 = IRQ is priority level 1
- 11 = IRQ is priority level 2

#### 5.6.9.8 Timer A, Channel 1 Interrupt Priority Level (TMRA1 IPL)—Bits 1–0

This field is used to set the interrupt priority level for IRQs. This IRQ is limited to priorities 0 through 2. They are disabled by default.

- 00 = IRQ disabled (default)
- 01 = IRQ is priority level 0
- 10 = IRQ is priority level 1
- 11 = IRQ is priority level 2

### 5.6.10 Interrupt Priority Register 9 (IPR9)

| Base + $9 | 15 | 14 | 13 | 12 | 11 | 10 | 9 | 8 | 7 | 6 | 5 | 4 | 3 | 2 | 1 | 0 |
|---|---|---|---|---|---|---|---|---|---|---|---|---|---|---|---|---|
| Read<br>Write | PWMA_F IPL | | PWMB_F IPL | | PWMA_RL IPL | | PWMB_RL IPL | | ADCA_ZC IPL | | ABCB_ZC IPL | | ADCA_CC IPL | | ADCB_CC IPL | |
| RESET | 0 | 0 | 0 | 0 | 0 | 0 | 0 | 0 | 0 | 0 | 0 | 0 | 0 | 0 | 0 | 0 |

**Figure 5-12 Interrupt Priority Register 9 (IPR9)**

#### 5.6.10.1 PWM A Fault Interrupt Priority Level (PWMA_F IPL)—Bits 15–14

This field is used to set the interrupt priority level for IRQs. This IRQ is limited to priorities 0 through 2. They are disabled by default.

- 00 = IRQ disabled (default)
- 01 = IRQ is priority level 0
- 10 = IRQ is priority level 1
- 11 = IRQ is priority level 2

#### 5.6.10.2 PWM B Fault Interrupt Priority Level (PWMB_F IPL)—Bits 13–12

This field is used to set the interrupt priority level for IRQs. This IRQ is limited to priorities 0 through 2. They are disabled by default.

- 00 = IRQ disabled (default)

- 01 = IRQ is priority level 0
- 10 = IRQ is priority level 1
- 11 = IRQ is priority level 2

#### 5.6.10.3 Reload PWM A Interrupt Priority Level (PWMA_RL IPL)—Bits 11–10

This field is used to set the interrupt priority level for IRQs. This IRQ is limited to priorities 0 through 2. They are disabled by default.

- 00 = IRQ disabled (default)
- 01 = IRQ is priority level 0
- 10 = IRQ is priority level 1
- 11 = IRQ is priority level 2

#### 5.6.10.4 Reload PWM B Interrupt Priority Level (PWMB_RL IPL)—Bits 9–8

This field is used to set the interrupt priority level for IRQs. This IRQ is limited to priorities 0 through 2. They are disabled by default.

- 00 = IRQ disabled (default)
- 01 = IRQ is priority level 0
- 10 = IRQ is priority level 1
- 11 = IRQ is priority level 2

#### 5.6.10.5 ADC A Zero Crossing or Limit Error Interrupt Priority Level (ADCA_ZC IPL)—Bits 7–6

This field is used to set the interrupt priority level for IRQs. This IRQ is limited to priorities 0 through 2. They are disabled by default.

- 00 = IRQ disabled (default)
- 01 = IRQ is priority level 0
- 10 = IRQ is priority level 1
- 11 = IRQ is priority level 2

#### 5.6.10.6 ADC B Zero Crossing or Limit Error Interrupt Priority Level (ADCB_ZC IPL)—Bits 5–4

This field is used to set the interrupt priority level for IRQs. This IRQ is limited to priorities 0 through 2. They are disabled by default.

- 00 = IRQ disabled (default)
- 01 = IRQ is priority level 0
- 10 = IRQ is priority level 1
- 11 = IRQ is priority level 2

#### 5.6.10.7 ADC A Conversion Complete Interrupt Priority Level (ADCA_CC IPL)—Bits 3–2

This field is used to set the interrupt priority level for IRQs. This IRQ is limited to priorities 0 through 2. They are disabled by default.

- 00 = IRQ disabled (default)
- 01 = IRQ is priority level 0
- 10 = IRQ is priority level 1
- 11 = IRQ is priority level 2

#### 5.6.10.8 ADC B Conversion Complete Interrupt Priority Level (ADCB_CC IPL)—Bits 1–0

This field is used to set the interrupt priority level for IRQs. This IRQ is limited to priorities 0 through 2. They are disabled by default.

- 00 = IRQ disabled (default)
- 01 = IRQ is priority level 0
- 10 = IRQ is priority level 1
- 11 = IRQ is priority level 2

### 5.6.11 Vector Base Address Register (VBA)

| Base + $A | 15 | 14 | 13 | 12 | 11 | 10 | 9 | 8 | 7 | 6 | 5 | 4 | 3 | 2 | 1 | 0 |
|---|---|---|---|---|---|---|---|---|---|---|---|---|---|---|---|---|
| Read | 0 | 0 | 0 | VECTOR BASE ADDRESS | | | | | | | | | | | | |
| Write | | | | | | | | | | | | | | | | |
| RESET | 0 | 0 | 0 | 0 | 0 | 0 | 0 | 0 | 0 | 0 | 0 | 0 | 0 | 0 | 0 | 0 |

**Figure 5-13 Vector Base Address Register (VBA)**

#### 5.6.11.1 Reserved—Bits 15–13

This bit field is reserved or not implemented. It is read as 0 and cannot be modified by writing.

#### 5.6.11.2 Interrupt Vector Base Address (VECTOR BASE ADDRESS)—Bits 12–0

The contents of this register determine the location of the Vector Address Table. The value in this register is used as the upper 13 bits of the interrupt Vector Address Bus (VAB[20:0]). The lower eight bits are determined based upon the highest-priority interrupt. They are then appended onto VBA before presenting the full interrupt address to the 56800E core; see **Part 5.3.1** for details.

## 5.6.12 Fast Interrupt 0 Match Register (FIM0)

| Base + $B | 15 | 14 | 13 | 12 | 11 | 10 | 9 | 8 | 7 | 6 | 5 | 4 | 3 | 2 | 1 | 0 |
|---|---|---|---|---|---|---|---|---|---|---|---|---|---|---|---|---|
| Read | 0 | 0 | 0 | 0 | 0 | 0 | 0 | 0 | 0 | FAST INTERRUPT 0 | | | | | | |
| Write | | | | | | | | | | | | | | | | |
| RESET | 0 | 0 | 0 | 0 | 0 | 0 | 0 | 0 | 0 | 0 | 0 | 0 | 0 | 0 | 0 | 0 |

**Figure 5-14 Fast Interrupt 0 Match Register (FIM0)**

### 5.6.12.1 Reserved—Bits 15–7

This bit field is reserved or not implemented. It is read as 0 and cannot be modified by writing.

### 5.6.12.2 Fast Interrupt 0 Vector Number (FAST INTERRUPT 0)—Bits 6–0

This value determines which IRQ will be a Fast Interrupt 0. Fast interrupts vector directly to a service routine based on values in the Fast Interrupt Vector Address registers without having to go to a jump table first; see **Part 5.3.3**. IRQs used as fast interrupts *must* be set to priority level 2. Unexpected results will occur if a fast interrupt vector is set to any other priority. Fast interrupts automatically become the highest-priority level 2 interrupt, regardless of their location in the interrupt table, prior to being declared as fast interrupt. Fast Interrupt 0 has priority over Fast Interrupt 1. To determine the vector number of each IRQ, refer to **Table 4-5**.

## 5.6.13 Fast Interrupt 0 Vector Address Low Register (FIVAL0)

| Base + $C | 15 | 14 | 13 | 12 | 11 | 10 | 9 | 8 | 7 | 6 | 5 | 4 | 3 | 2 | 1 | 0 |
|---|---|---|---|---|---|---|---|---|---|---|---|---|---|---|---|---|
| Read | FAST INTERRUPT 0 VECTOR ADDRESS LOW | | | | | | | | | | | | | | | |
| Write | | | | | | | | | | | | | | | | |
| RESET | 0 | 0 | 0 | 0 | 0 | 0 | 0 | 0 | 0 | 0 | 0 | 0 | 0 | 0 | 0 | 0 |

**Figure 5-15 Fast Interrupt 0 Vector Address Low Register (FIVAL0)**

### 5.6.13.1 Fast Interrupt 0 Vector Address Low (FIVAL0)—Bits 15–0

The lower 16 bits of the vector address used for Fast Interrupt 0. This register is combined with FIVAH0 to form the 21-bit vector address for Fast Interrupt 0 defined in the FIM0 register.

## 5.6.14 Fast Interrupt 0 Vector Address High Register (FIVAH0)

| Base + $D | 15 | 14 | 13 | 12 | 11 | 10 | 9 | 8 | 7 | 6 | 5 | 4 | 3 | 2 | 1 | 0 |
|---|---|---|---|---|---|---|---|---|---|---|---|---|---|---|---|---|
| Read | 0 | 0 | 0 | 0 | 0 | 0 | 0 | 0 | 0 | 0 | 0 | FAST INTERRUPT 0 VECTOR ADDRESS HIGH | | | | |
| Write | | | | | | | | | | | | | | | | |
| RESET | 0 | 0 | 0 | 0 | 0 | 0 | 0 | 0 | 0 | 0 | 0 | 0 | 0 | 0 | 0 | 0 |

**Figure 5-16 Fast Interrupt 0 Vector Address High Register (FIVAH0)**

#### 5.6.14.1 Reserved—Bits 15–5

This bit field is reserved or not implemented. It is read as 0 and cannot be modified by writing.

#### 5.6.14.2 Fast Interrupt 0 Vector Address High (FIVAH0)—Bits 4–0

The upper five bits of the vector address used for Fast Interrupt 0. This register is combined with FIVAL0 to form the 21-bit vector address for Fast Interrupt 0 defined in the FIM0 register.

### 5.6.15 Fast Interrupt 1 Match Register (FIM1)

| Base + $E | 15 | 14 | 13 | 12 | 11 | 10 | 9 | 8 | 7 | 6 | 5 | 4 | 3 | 2 | 1 | 0 |
|---|---|---|---|---|---|---|---|---|---|---|---|---|---|---|---|---|
| Read | 0 | 0 | 0 | 0 | 0 | 0 | 0 | 0 | 0 | FAST INTERRUPT 1 | | | | | | |
| Write | | | | | | | | | | | | | | | | |
| RESET | 0 | 0 | 0 | 0 | 0 | 0 | 0 | 0 | 0 | 0 | 0 | 0 | 0 | 0 | 0 | 0 |

**Figure 5-17 Fast Interrupt 1 Match Register (FIM1)**

#### 5.6.15.1 Reserved—Bits 15–7

This bit field is reserved or not implemented. It is read as 0, but cannot be modified by writing.

#### 5.6.15.2 Fast Interrupt 1 Vector Number (FAST INTERRUPT 1)—Bits 6–0

This value determines which IRQ will be a Fast Interrupt 1. Fast interrupts vector directly to a service routine based on values in the Fast Interrupt Vector Address registers without having to go to a jump table first; see **Part 5.3.3**. IRQs used as fast interrupts *must* be set to priority level 2. Unexpected results will occur if a fast interrupt vector is set to any other priority. Fast interrupts automatically become the highest-priority level 2 interrupt, regardless of their location in the interrupt table, prior to being declared as fast interrupt. Fast Interrupt 0 has priority over Fast Interrupt 1. To determine the vector number of each IRQ, refer to **Table 4-5**.

### 5.6.16 Fast Interrupt 1 Vector Address Low Register (FIVAL1)

| Base + $F | 15 | 14 | 13 | 12 | 11 | 10 | 9 | 8 | 7 | 6 | 5 | 4 | 3 | 2 | 1 | 0 |
|---|---|---|---|---|---|---|---|---|---|---|---|---|---|---|---|---|
| Read | FAST INTERRUPT 1 VECTOR ADDRESS LOW | | | | | | | | | | | | | | | |
| Write | | | | | | | | | | | | | | | | |
| RESET | 0 | 0 | 0 | 0 | 0 | 0 | 0 | 0 | 0 | 0 | 0 | 0 | 0 | 0 | 0 | 0 |

**Figure 5-18 Fast Interrupt 1 Vector Address Low Register (FIVAL1)**

#### 5.6.16.1 Fast Interrupt 1 Vector Address Low (FIVAL1)—Bits 15–0

The lower 16 bits of the vector address are used for Fast Interrupt 1. This register is combined with FIVAH1 to form the 21-bit vector address for Fast Interrupt 1 defined in the FIM1 register.

## 5.6.17 Fast Interrupt 1 Vector Address High Register (FIVAH1)

| Base + $10 | 15 | 14 | 13 | 12 | 11 | 10 | 9 | 8 | 7 | 6 | 5 | 4 | 3 | 2 | 1 | 0 |
|---|---|---|---|---|---|---|---|---|---|---|---|---|---|---|---|---|
| Read | 0 | 0 | 0 | 0 | 0 | 0 | 0 | 0 | 0 | 0 | 0 | FAST INTERRUPT 1 VECTOR ADDRESS HIGH | | | | |
| Write | | | | | | | | | | | | | | | | |
| RESET | 0 | 0 | 0 | 0 | 0 | 0 | 0 | 0 | 0 | 0 | 0 | 0 | 0 | 0 | 0 | 0 |

**Figure 5-19 Fast Interrupt 1 Vector Address High Register (FIVAH1)**

### 5.6.17.1 Reserved—Bits 15–5

This bit field is reserved or not implemented. It is read as 0 and cannot be modified by writing.

### 5.6.17.2 Fast Interrupt 1 Vector Address High (FIVAH1)—Bits 4–0

The upper five bits of the vector address are used for Fast Interrupt 1. This register is combined with FIVAL1 to form the 21-bit vector address for Fast Interrupt 1 defined in the FIM1 register.

## 5.6.18 IRQ Pending 0 Register (IRQP0)

| Base + $11 | 15 | 14 | 13 | 12 | 11 | 10 | 9 | 8 | 7 | 6 | 5 | 4 | 3 | 2 | 1 | 0 |
|---|---|---|---|---|---|---|---|---|---|---|---|---|---|---|---|---|
| Read | PENDING [16:2] | | | | | | | | | | | | | | | 1 |
| Write | | | | | | | | | | | | | | | | |
| RESET | 1 | 1 | 1 | 1 | 1 | 1 | 1 | 1 | 1 | 1 | 1 | 1 | 1 | 1 | 1 | 1 |

**Figure 5-20 IRQ Pending 0 Register (IRQP0)**

### 5.6.18.1 IRQ Pending (PENDING)—Bits 16–2

This register combines with the other five to represent the pending IRQs for interrupt vector numbers two through 81.

- 0 = IRQ pending for this vector number
- 1 = No IRQ pending for this vector number

### 5.6.18.2 Reserved—Bit 0

This bit is reserved or not implemented. It is read as 1 and cannot be modified by writing.

## 5.6.19 IRQ Pending 1 Register (IRQP1)

| $Base + $12 | 15 | 14 | 13 | 12 | 11 | 10 | 9 | 8 | 7 | 6 | 5 | 4 | 3 | 2 | 1 | 0 |
|---|---|---|---|---|---|---|---|---|---|---|---|---|---|---|---|---|
| Read | PENDING [32:17] | | | | | | | | | | | | | | | |
| Write | | | | | | | | | | | | | | | | |
| RESET | 1 | 1 | 1 | 1 | 1 | 1 | 1 | 1 | 1 | 1 | 1 | 1 | 1 | 1 | 1 | 1 |

**Figure 5-21 IRQ Pending 1 Register (IRQP1)**

#### 5.6.19.1 IRQ Pending (PENDING)—Bits 32–17

This register combines with the other five to represent the pending IRQs for interrupt vector numbers 2 through 81.

- 0 = IRQ pending for this vector number
- 1 = No IRQ pending for this vector number

### 5.6.20 IRQ Pending 2 Register (IRQP2)

| Base + $13 | 15 | 14 | 13 | 12 | 11 | 10 | 9 | 8 | 7 | 6 | 5 | 4 | 3 | 2 | 1 | 0 |
|---|---|---|---|---|---|---|---|---|---|---|---|---|---|---|---|---|
| Read | PENDING [48:33] | | | | | | | | | | | | | | | |
| Write | | | | | | | | | | | | | | | | |
| RESET | 1 | 1 | 1 | 1 | 1 | 1 | 1 | 1 | 1 | 1 | 1 | 1 | 1 | 1 | 1 | 1 |

**Figure 5-22 IRQ Pending 2 Register (IRQP2)**

#### 5.6.20.1 IRQ Pending (PENDING)—Bits 48–33

This register combines with the other five to represent the pending IRQs for interrupt vector numbers 2 through 81.

- 0 = IRQ pending for this vector number
- 1 = No IRQ pending for this vector number

### 5.6.21 IRQ Pending 3 Register (IRQP3)

| Base + $14 | 15 | 14 | 13 | 12 | 11 | 10 | 9 | 8 | 7 | 6 | 5 | 4 | 3 | 2 | 1 | 0 |
|---|---|---|---|---|---|---|---|---|---|---|---|---|---|---|---|---|
| Read | PENDING [64:49] | | | | | | | | | | | | | | | |
| Write | | | | | | | | | | | | | | | | |
| RESET | 1 | 1 | 1 | 1 | 1 | 1 | 1 | 1 | 1 | 1 | 1 | 1 | 1 | 1 | 1 | 1 |

**Figure 5-23 IRQ Pending 3 Register (IRQP3)**

#### 5.6.21.1 IRQ Pending (PENDING)—Bits 64–49

This register combines with the other five to represent the pending IRQs for interrupt vector numbers 2 through 81.

- 0 = IRQ pending for this vector number
- 1 = No IRQ pending for this vector number

## 5.6.22 IRQ Pending 4 Register (IRQP4)

| Base + $15 | 15 | 14 | 13 | 12 | 11 | 10 | 9 | 8 | 7 | 6 | 5 | 4 | 3 | 2 | 1 | 0 |
|---|---|---|---|---|---|---|---|---|---|---|---|---|---|---|---|---|
| Read | PENDING [80:65] | | | | | | | | | | | | | | | |
| Write | | | | | | | | | | | | | | | | |
| RESET | 1 | 1 | 1 | 1 | 1 | 1 | 1 | 1 | 1 | 1 | 1 | 1 | 1 | 1 | 1 | 1 |

**Figure 5-24 IRQ Pending 4 Register (IRQP4)**

### 5.6.22.1 IRQ Pending (PENDING)—Bits 80–65

This register combines with the other five to represent the pending IRQs for interrupt vector numbers 2 through 81.

- 0 = IRQ pending for this vector number
- 1 = No IRQ pending for this vector number

## 5.6.23 IRQ Pending 5 Register (IRQP5)

| Base + $16 | 15 | 14 | 13 | 12 | 11 | 10 | 9 | 8 | 7 | 6 | 5 | 4 | 3 | 2 | 1 | 0 |
|---|---|---|---|---|---|---|---|---|---|---|---|---|---|---|---|---|
| Read | 1 | 1 | 1 | 1 | 1 | 1 | 1 | 1 | 1 | 1 | 1 | PENDING[85:81] | | | | |
| Write | | | | | | | | | | | | | | | | |
| RESET | 1 | 1 | 1 | 1 | 1 | 1 | 1 | 1 | 1 | 1 | 1 | 1 | 1 | 1 | 1 | 1 |

**Figure 5-25 IRQ Pending Register 5 (IRQP5)**

### 5.6.23.1 Reserved—Bits 96–86

This bit field is reserved or not implemented. The bits are read as 1 and cannot be modified by writing.

### 5.6.23.2 IRQ Pending (PENDING)—Bits 81–85

This register combines with the other five to represent the pending IRQs for interrupt vector numbers 2 through 85.

- 0 = IRQ pending for this vector number
- 1 = No IRQ pending for this vector number

## 5.6.24 Reserved—Base + 17

## 5.6.25 Reserved—Base + 18

## 5.6.26 Reserved—Base + 19

## 5.6.27 Reserved—Base + 1A

## 5.6.28 Reserved—Base + 1B

## 5.6.29 Reserved—Base + 1C

## 5.6.30 ITCN Control Register (ICTL)

| Base + $1D | 15 | 14 | 13 | 12 | 11 | 10 | 9 | 8 | 7 | 6 | 5 | 4 | 3 | 2 | 1 | 0 |
|---|---|---|---|---|---|---|---|---|---|---|---|---|---|---|---|---|
| Read | INT | IPIC | | VAB | | | | | | | INT_DIS | 1 | $\overline{\text{IRQB}}$ STATE | $\overline{\text{IRQA}}$ STATE | $\overline{\text{IRQB}}$ EDG | $\overline{\text{IRQA}}$ EDG |
| Write | | | | | | | | | | | | | | | | |
| RESET | 0 | 0 | 0 | 1 | 0 | 0 | 0 | 0 | 0 | 0 | 0 | 1 | 1 | 1 | 0 | 0 |

**Figure 5-26 ITCN Control Register (ICTL)**

### 5.6.30.1 Interrupt (INT)—Bit 15

This *read-only* bit reflects the state of the interrupt to the 56800E core.

- 0 = No interrupt is being sent to the 56800E core
- 1 = An interrupt is being sent to the 56800E core

### 5.6.30.2 Interrupt Priority Level (IPIC)—Bits 14–13

These *read-only* bits reflect the state of the new interrupt priority level bits being presented to the 56800E core at the time the last IRQ was taken. This field is only updated when the 56800E core jumps to a new interrupt service routine.

**Note:** Nested interrupts may cause this field to be updated before the original interrupt service routine can read it.

- 00 = Required nested exception priority levels are 0, 1, 2, or 3
- 01 = Required nested exception priority levels are 1, 2, or 3
- 10 = Required nested exception priority levels are 2 or 3
- 11 = Required nested exception priority level is 3

### 5.6.30.3 Vector Number - Vector Address Bus (VAB)—Bits 12–6

This *read-only* field shows the vector number (VAB[7:1]) used at the time the last IRQ was taken. This field is only updated when the 56800E core jumps to a new interrupt service routine.

**Note:** Nested interrupts may cause this field to be updated before the original interrupt service routine can read it.

### 5.6.30.4 Interrupt Disable (INT_DIS)—Bit 5

This bit allows all interrupts to be disabled.

- 0 = Normal operation (default)
- 1 = All interrupts disabled

### 5.6.30.5 Reserved—Bit 4

This bit field is reserved or not implemented. It is read as 1 and cannot be modified by writing.

#### 5.6.30.6 $\overline{\text{IRQB}}$ State Pin ($\overline{\text{IRQB}}$ STATE)—Bit 3

This *read-only* bit reflects the state of the external $\overline{\text{IRQB}}$ pin.

#### 5.6.30.7 $\overline{\text{IRQA}}$ State Pin ($\overline{\text{IRQA}}$ STATE)—Bit 2

This *read-only* bit reflects the state of the external $\overline{\text{IRQA}}$ pin.

#### 5.6.30.8 $\overline{\text{IRQB}}$ Edge Pin ($\overline{\text{IRQB}}$ Edg)—Bit 1

This bit controls whether the external $\overline{\text{IRQB}}$ interrupt is edge or level sensitive. During Stop and Wait modes, it is automatically level-sensitive.

- 0 = $\overline{\text{IRQB}}$ interrupt is a low-level sensitive (default)
- 1 = $\overline{\text{IRQB}}$ interrupt is falling-edge sensitive.

#### 5.6.30.9 $\overline{\text{IRQA}}$ Edge Pin ($\overline{\text{IRQA}}$ Edg)—Bit 0

This bit controls whether the external $\overline{\text{IRQA}}$ interrupt is edge or level sensitive. During Stop and Wait modes, it is automatically level-sensitive.

- 0 = $\overline{\text{IRQA}}$ interrupt is a low-level sensitive (default)
- 1 = $\overline{\text{IRQA}}$ interrupt is falling-edge sensitive.

### 5.6.31 Reserved—Base + $1E

### 5.6.32 Interrupt Priority Register 10 (IPR10)

| Base + $1F | 15 | 14 | 13 | 12 | 11 | 10 | 9 | 8 | 7 | 6 | 5 | 4 | 3 | 2 | 1 | 0 |
|---|---|---|---|---|---|---|---|---|---|---|---|---|---|---|---|---|
| Read | 0 | 0 | 0 | 0 | 0 | 0 | 0 | 0 | FLEXCAN2_ MSGBUF IPL | | FLEXCAN2_ WKUP IPL | | FLEXCAN2_ ERR IPL | | FLEXCAN2_ BOFF IPL | |
| Write | | | | | | | | | | | | | | | | |
| RESET | 0 | 0 | 0 | 1 | 0 | 0 | 0 | 0 | 0 | 0 | 0 | 0 | 0 | 0 | 0 | 0 |

**Figure 5-27 Interrupt Priority Register 10 (IPR10)**

***Note**: This register is NOT available in the 56F8165 device.*

#### 5.6.32.1 Reserved—Bits 15 - 8

This bit field is reserved or not implemented. It is read as 0 and cannot be modified by writing.

#### 5.6.32.2 FlexCAN2 Message Buffer Interrupt Priority Level (FlexCAN2_MSGBUF IPL)—Bits 7 - 6

This field is used to set the interrupt priority level for IRQs. This IRQ is limited to priorities 0 through 2. They are disabled by default.

- 00 = IRQ disabled (default)
- 01 = IRQ is priority level 0

- 10 = IRQ is priority level 1
- 11 = IRQ is priority level 2

#### 5.6.32.3 FlexCAN2 Wake Up Interrupt Priority Level (FlexCAN2_WKUP IPL)—Bits 5 - 4

This field is used to set the interrupt priority level for IRQs. This IRQ is limited to priorities 0 through 2. They are disabled by default.

- 00 = IRQ disabled (default)
- 01 = IRQ is priority level 0
- 10 = IRQ is priority level 1
- 11 = IRQ is priority level 2

#### 5.6.32.4 FlexCAN2 Error Interrupt Priority Level (FlexCAN2_ERR IPL)—Bits 3 - 2

This field is used to set the interrupt priority level for IRQs. This IRQ is limited to priorities 0 through 2. They are disabled by default.

- 00 = IRQ disabled (default)
- 01 = IRQ is priority level 0
- 10 = IRQ is priority level 1
- 11 = IRQ is priority level 2

#### 5.6.32.5 FlexCAN2 Bus-Off Interrupt Priority Level (FlexCAN2_BOFF IPL)—Bits 1 - 0

This field is used to set the interrupt priority level for IRQs. This IRQ is limited to priorities 0 through 2. They are disabled by default.

- 00 = IRQ disabled (default)
- 01 = IRQ is priority level 0
- 10 = IRQ is priority level 1
- 11 = IRQ is priority level 2

## 5.7 Resets

### 5.7.1 Reset Handshake Timing

The ITCN provides the 56800E core with a reset vector address whenever $\overline{\text{RESET}}$ is asserted. The reset vector will be presented until the second rising clock edge after $\overline{\text{RESET}}$ is released.

### 5.7.2 ITCN After Reset

After reset, all of the ITCN registers are in their default states. This means all interrupts are disabled except the core IRQs with fixed priorities:

- Illegal Instruction

- SW Interrupt 3
- HW Stack Overflow
- Misaligned Long Word Access
- SW Interrupt 2
- SW Interrupt 1
- SW Interrupt 0
- SW Interrupt LP

These interrupts are enabled at their fixed priority levels.

# Part 6 System Integration Module (SIM)

## 6.1 Introduction

The SIM module is a system catchall for the glue logic that ties together the system-on-chip. It controls distribution of resets and clocks and provides a number of control features. The system integration module is responsible for the following functions:

- Reset sequencing
- Clock generation & distribution
- Stop/Wait control
- Pull-up enables for selected peripherals
- System status registers
- Registers for software access to the JTAG ID of the chip
- Enforcing Flash security

These are discussed in more detail in the sections that follow.

## 6.2 Features

The SIM has the following features:

- Flash security feature prevents unauthorized access to code/data contained in on-chip Flash memory
- Power-saving clock gating for peripheral
- Three power modes (Run, Wait, Stop) to control power utilization
  - Stop mode shuts down the 56800E core, system clock, peripheral clock, and PLL operation
  - Stop mode entry can optionally disable PLL and Oscillator (low power vs. fast restart); must be explicitly done
  - Wait mode shuts down the 56800E core and unnecessary system clock operation
  - Run mode supports full part operation
- Controls to enable/disable the 56800E core WAIT and STOP instructions
- Calculates base delay for reset extension based upon POR or $\overline{\text{RESET}}$ operations. Reset delay will be 3 x 32 clocks (phased release of reset) for reset, except for POR, which is 2^21 clock cycles

- Controls reset sequencing after reset
- Software-initiated reset
- Four 16-bit registers reset only by a Power-On Reset usable for general-purpose software control
- System Control Register
- Registers for software access to the JTAG ID of the chip

## 6.3 Operating Modes

Since the SIM is responsible for distributing clocks and resets across the chip, it must understand the various chip operating modes and take appropriate action. These are:

- **Reset Mode,** which has two submodes:
  - — POR and $\overline{\text{RESET}}$ operation
    The 56800E core and all peripherals are reset. This occurs when the internal POR is asserted or the $\overline{\text{RESET}}$ pin is asserted.
  - — COP reset and software reset operation
    The 56800E core and all peripherals are reset. The MA bit within the OMR is not changed. This allows the software to determine the boot mode (internal or external boot) to be used on the next reset.
- **Run Mode**
  This is the primary mode of operation for this device. In this mode, the 56800E controls chip operation.
- **Debug Mode**
  The 56800E is controlled via JTAG/EOnCE when in debug mode. All peripherals, except the COP and PWMs, continue to run. COP is disabled and PWM outputs are optionally switched off to disable any motor from being driven; see the PWM chapter in the **56F8300 Peripheral User Manual** for details.
- **Wait Mode**
  In Wait mode, the core clock and memory clocks are disabled. Optionally, the COP can be stopped. Similarly, it is an option to switch off PWM outputs to disable any motor from being driven. All other peripherals continue to run.
- **Stop Mode**
  When in Stop mode, the 56800E core, memory and most peripheral clocks are shut down. Optionally, the COP and CAN can be stopped. For lowest power consumption in Stop mode, the PLL can be shut down. This must be done explicitly before entering Stop mode, since there is no automatic mechanism for this. The CAN (along with any non-gated interrupt) is capable of waking the chip up from Stop mode, but is not fully functional in Stop mode.

## 6.4 Operating Mode Register

| Bit | 15 | 14 | 13 | 12 | 11 | 10 | 9 | 8 | 7 | 6 | 5 | 4 | 3 | 2 | 1 | 0 |
|---|---|---|---|---|---|---|---|---|---|---|---|---|---|---|---|---|
| | NL | | | | | | | CM | XP | SD | R | SA | EX | 0 | MB | MA |
| Type | R/W | | | | | | | R/W | R/W | R/W | R/W | R/W | R/W | | R/W | R/W |
| RESET | 0 | 0 | 0 | 0 | 0 | 0 | 0 | 0 | 0 | 0 | 0 | 0 | 0 | 0 | X | X |

**Figure 6-1 OMR**

The reset state for MB and MA will depend on the Flash secured state. See **Part 4.2** and **Part 7** for detailed information on how the Operating Mode Register (OMR) MA and MB bits operate in this device. For additional information on the EX bit, see **Part 4.4**. For all other bits, see the **DSP56F800E Reference Manual**.

**Note:** The OMR is not a Memory Map register; it is directly accessible in code through the acronym OMR.

## 6.5 Register Descriptions

**Table 6-1 SIM Registers (SIM_BASE = $00 F350)**

| Address Offset | Address Acronym | Register Name | Section Location |
|---|---|---|---|
| Base + $0 | SIM_CONTROL | Control Register | 6.5.1 |
| Base + $1 | SIM_RSTSTS | Reset Status Register | 6.5.2 |
| Base + $2 | SIM_SCR0 | Software Control Register 0 | 6.5.3 |
| Base + $3 | SIM_SCR1 | Software Control Register 1 | 6.5.3 |
| Base + $4 | SIM_SCR2 | Software Control Register 2 | 6.5.3 |
| Base + $5 | SIM_SCR3 | Software Control Register 3 | 6.5.3 |
| Base + $6 | SIM_MSH_ID | Most Significant Half of JTAG ID | 6.5.4 |
| Base + $7 | SIM_LSH_ID | Least Significant Half of JTAG ID | 6.5.5 |
| Base + $8 | SIM_PUDR | Pull-up Disable Register | 6.5.6 |
| | | Reserved | |
| Base + $A | SIM_CLKOSR | CLKO Select Register | 6.5.7 |
| Base + $B | SIM_GPS | GPIO Peripheral Select Register | 6.5.8 |
| Base + $C | SIM_PCE | Peripheral Clock Enable Register | 6.5.9 |
| Base + $D | SIM_ISALH | I/O Short Address Location High Register | 6.5.10 |
| Base + $E | SIM_ISALL | I/O Short Address Location Low Register | 6.5.10 |
| Base + $F | SIM_PCE2 | Peripheral Clock Enable Register 2 | 6.5.11 |

| Add. Offset | Register Name | | 15 | 14 | 13 | 12 | 11 | 10 | 9 | 8 | 7 | 6 | 5 | 4 | 3 | 2 | 1 | 0 |
|---|---|---|---|---|---|---|---|---|---|---|---|---|---|---|---|---|---|---|
| $0 | SIM_ CONTROL | R | 0 | 0 | 0 | 0 | 0 | 0 | 0 | 0 | 0 | 0 | ONCE EBL | SW RST | STOP_ DISABLE | | WAIT_ DISABLE | |
| | | W | | | | | | | | | | | | | | | | |
| $1 | SIM_ RSTSTS | R | 0 | 0 | 0 | 0 | 0 | 0 | 0 | 0 | 0 | 0 | SWR | COPR | EXTR | POR | 0 | 0 |
| | | W | | | | | | | | | | | | | | | | |
| $2 | SIM_SCR0 | R | FIELD | | | | | | | | | | | | | | | |
| | | W | | | | | | | | | | | | | | | | |
| $3 | SIM_SCR1 | R | FIELD | | | | | | | | | | | | | | | |
| | | W | | | | | | | | | | | | | | | | |
| $4 | SIM_SCR2 | R | FIELD | | | | | | | | | | | | | | | |
| | | W | | | | | | | | | | | | | | | | |
| $5 | SIM_SCR3 | R | FIELD | | | | | | | | | | | | | | | |
| | | W | | | | | | | | | | | | | | | | |
| $6 | SIM_MSH_ ID | R | 0 | 0 | 0 | 0 | 0 | 0 | 0 | 1 | 1 | 1 | 0 | 1 | 0 | 1 | 1 | 0 |
| | | W | | | | | | | | | | | | | | | | |
| $7 | SIM_LSH_ID | R | 1 | 1 | 0 | 1 | 0 | 0 | 0 | 0 | 0 | 0 | 0 | 1 | 1 | 1 | 0 | 1 |
| | | W | | | | | | | | | | | | | | | | |
| $8 | SIM_PUDR | R | 0 | PWMA1 | CAN | EMI_ MODE | RESET | IRQ | XBOOT | PWMB | PWMA0 | 0 | CTRL | 0 | JTAG | 0 | 0 | 0 |
| | | W | | | | | | | | | | | | | | | | |
| | Reserved | | | | | | | | | | | | | | | | | |
| $A | SIM_ CLKOSR | R | 0 | 0 | 0 | 0 | 0 | 0 | $\overline{A23}$ | $\overline{A22}$ | $\overline{A21}$ | $\overline{A20}$ | CLKDIS | CLKOSEL | | | | |
| | | W | | | | | | | | | | | | | | | | |
| $B | SIM_GPS | R | 0 | 0 | 0 | 0 | 0 | 0 | 0 | 0 | 0 | 0 | D1 | D0 | C3 | C2 | C1 | C0 |
| | | W | | | | | | | | | | | | | | | | |
| $C | SIM_PCE | R | EMI | ADCB | ADCA | CAN | DEC1 | DEC 0 | TMRD | TMRC | TMRB | TMRA | SCI1 | SCI0 | SPI1 | SPI0 | PWMB | PWMA |
| | | W | | | | | | | | | | | | | | | | |
| $D | SIM_ISALH | R | 1 | 1 | 1 | 1 | 1 | 1 | 1 | 1 | 1 | 1 | 1 | 1 | 1 | 1 | ISAL[23:22] | |
| | | W | | | | | | | | | | | | | | | | |
| $E | SIM_ISALL | R | ISAL[21:6] | | | | | | | | | | | | | | | |
| | | W | | | | | | | | | | | | | | | | |
| $F | SIM_PCE2 | R | 0 | 0 | 0 | 0 | 0 | 0 | 0 | 0 | 0 | 0 | 0 | 0 | 0 | 0 | 0 | CAN2 |
| | | W | | | | | | | | | | | | | | | | |

= Reserved

**Figure 6-2 SIM Register Map Summary**

## 6.5.1 SIM Control Register (SIM_CONTROL)

| Base + $0 | 15 | 14 | 13 | 12 | 11 | 10 | 9 | 8 | 7 | 6 | 5 | 4 | 3 | 2 | 1 | 0 |
|---|---|---|---|---|---|---|---|---|---|---|---|---|---|---|---|---|
| Read | 0 | 0 | 0 | 0 | 0 | 0 | 0 | 0 | 0 | 0 | ONCE EBL | SW RST | STOP_ DISABLE | | WAIT_ DISABLE | |
| Write | | | | | | | | | | | | | | | | |
| RESET | 0 | 0 | 0 | 0 | 0 | 0 | 0 | 0 | 0 | 0 | 0 | 0 | 0 | 0 | 0 | 0 |

**Figure 6-3 SIM Control Register (SIM_CONTROL)**

### 6.5.1.1 Reserved—Bits 15–6

This bit field is reserved or not implemented. It is read as 0 and cannot be modified by writing.

### 6.5.1.2 OnCE Enable (OnCE EBL)—Bit 5

- 0 = OnCE clock to 56800E core enabled when core TAP is enabled

- 1 = OnCE clock to 56800E core is always enabled

#### 6.5.1.3 Software Reset (SW RST)—Bit 4

This bit is always read as 0. Writing a 1 to this bit will cause the part to reset.

#### 6.5.1.4 Stop Disable (STOP_DISABLE)—Bits 3–2

- 00 = Stop mode will be entered when the 56800E core executes a STOP instruction
- 01 = The 56800E STOP instruction will not cause entry into Stop mode; STOP_DISABLE can be reprogrammed in the future
- 10 = The 56800E STOP instruction will not cause entry into Stop mode; STOP_DISABLE can then only be changed by resetting the device
- 11 = Same operation as 10

#### 6.5.1.5 Wait Disable (WAIT_DISABLE)—Bits 1–0

- 00 = Wait mode will be entered when the 56800E core executes a WAIT instruction
- 01 = The 56800E WAIT instruction will not cause entry into Wait mode; WAIT_DISABLE can be reprogrammed in the future
- 10 = The 56800E WAIT instruction will not cause entry into Wait mode; WAIT_DISABLE can then only be changed by resetting the device
- 11 = Same operation as 10

### 6.5.2 SIM Reset Status Register (SIM_RSTSTS)

Bits in this register are set upon any system reset and are initialized only by a Power-On Reset (POR). A reset (other than POR) will only set bits in the register; bits are not cleared. Only software should clear this register.

| Base + $1 | 15 | 14 | 13 | 12 | 11 | 10 | 9 | 8 | 7 | 6 | 5 | 4 | 3 | 2 | 1 | 0 |
|---|---|---|---|---|---|---|---|---|---|---|---|---|---|---|---|---|
| Read | 0 | 0 | O | 0 | 0 | 0 | 0 | 0 | 0 | 0 | SWR | COPR | EXTR | POR | 0 | 0 |
| Write | | | | | | | | | | | | | | | | |
| RESET | 0 | 0 | 0 | 0 | 0 | 0 | 0 | 0 | 0 | 0 | | | | | 0 | 0 |

**Figure 6-4 SIM Reset Status Register (SIM_RSTSTS)**

#### 6.5.2.1 Reserved—Bits 15–6

This bit field is reserved or not implemented. It is read as 0 and cannot be modified by writing.

#### 6.5.2.2 Software Reset (SWR)—Bit 5

When 1, this bit indicates that the previous reset occurred as a result of a software reset (write to SW RST bit in the SIM_CONTROL register). This bit will be cleared by any hardware reset or by software. Writing a 0 to this bit position will set the bit, while writing a 1 to the bit will clear it.

#### 6.5.2.3 COP Reset (COPR)—Bit 4

When 1, the COPR bit indicates the Computer Operating Properly (COP) timer-generated reset has

occurred. This bit will be cleared by a Power-On Reset or by software. Writing a 0 to this bit position will set the bit, while writing a 1 to the bit will clear it.

#### 6.5.2.4 External Reset (EXTR)—Bit 3

If 1, the EXTR bit indicates an external system reset has occurred. This bit will be cleared by a Power-On Reset or by software. Writing a 0 to this bit position will set the bit, while writing a 1 to the bit position will clear it. Basically, when the EXTR bit is 1, the previous system reset was caused by the external RESET pin being asserted low.

#### 6.5.2.5 Power-On Reset (POR)—Bit 2

When 1, the POR bit indicates a Power-On Reset occurred some time in the past. This bit can only be cleared by software or by another type of reset. Writing a 0 to this bit will set the bit, while writing a 1 to the bit position will clear the bit. In summary, if the bit is 1, the previous system reset was due to a Power-On Reset.

#### 6.5.2.6 Reserved—Bits 1–0

This bit field is reserved or not implemented. It is read as 0 and cannot be modified by writing.

### 6.5.3 SIM Software Control Registers (SIM_SCR0, SIM_SCR1, SIM_SCR2, and SIM_SCR3)

Only SIM_SCR0 is shown in this section. SIM_SCR1, SIM_SCR2, and SIM_SCR3 are identical in functionality.

| Base + $2 | 15 | 14 | 13 | 12 | 11 | 10 | 9 | 8 | 7 | 6 | 5 | 4 | 3 | 2 | 1 | 0 |
|---|---|---|---|---|---|---|---|---|---|---|---|---|---|---|---|---|
| Read<br>Write | FIELD | | | | | | | | | | | | | | | |
| POR | 0 | 0 | 0 | 0 | 0 | 0 | 0 | 0 | 0 | 0 | 0 | 0 | 0 | 0 | 0 | 0 |

**Figure 6-5 SIM Software Control Register 0 (SIM_SCR0)**

#### 6.5.3.1 Software Control Data 1 (FIELD)—Bits 15–0

This register is reset only by the Power-On Reset (POR). It has no part-specific functionality and is intended for use by a software developer to contain data that will be unaffected by the other reset sources ($\overline{\text{RESET}}$ pin, software reset, and COP reset).

### 6.5.4 Most Significant Half of JTAG ID (SIM_MSH_ID)

This read-only register displays the most significant half of the JTAG ID for the chip. This register reads $01D6.

| Base + $6 | 15 | 14 | 13 | 12 | 11 | 10 | 9 | 8 | 7 | 6 | 5 | 4 | 3 | 2 | 1 | 0 |
|---|---|---|---|---|---|---|---|---|---|---|---|---|---|---|---|---|
| Read | 0 | 0 | 0 | 0 | 0 | 0 | 0 | 1 | 1 | 1 | 0 | 1 | 0 | 1 | 1 | 0 |
| Write | | | | | | | | | | | | | | | | |
| RESET | 0 | 0 | 0 | 0 | 0 | 0 | 0 | 1 | 1 | 1 | 0 | 1 | 0 | 1 | 1 | 0 |

**Figure 6-6 Most Significant Half of JTAG ID (SIM_MSH_ID)**

### 6.5.5 Least Significant Half of JTAG ID (SIM_LSH_ID)

This read-only register displays the least significant half of the JTAG ID for the chip. This register reads $D01D.

| Base + $7 | 15 | 14 | 13 | 12 | 11 | 10 | 9 | 8 | 7 | 6 | 5 | 4 | 3 | 2 | 1 | 0 |
|---|---|---|---|---|---|---|---|---|---|---|---|---|---|---|---|---|
| Read | 1 | 1 | 0 | 1 | 0 | 0 | 0 | 0 | 0 | 0 | 0 | 1 | 1 | 1 | 0 | 1 |
| Write | | | | | | | | | | | | | | | | |
| RESET | 1 | 1 | 0 | 1 | 0 | 0 | 0 | 0 | 0 | 0 | 0 | 1 | 1 | 1 | 0 | 1 |

**Figure 6-7 Least Significant Half of JTAG ID (SIM_LSH_ID)**

### 6.5.6 SIM Pull-up Disable Register (SIM_PUDR)

Most of the pins on the chip have on-chip pull-up resistors. Pins which can operate as GPIO can have these resistors disabled via the GPIO function. Non-GPIO pins can have their pull-ups disabled by setting the appropriate bit in this register. Disabling pull-ups is done on a peripheral-by-peripheral basis (for pins not muxed with GPIO). Each bit in the register (see **Figure 6-8**) corresponds to a functional group of pins. See **Table 2-2** to identify which pins can deactivate the internal pull-up resistor.

| Base + $8 | 15 | 14 | 13 | 12 | 11 | 10 | 9 | 8 | 7 | 6 | 5 | 4 | 3 | 2 | 1 | 0 |
|---|---|---|---|---|---|---|---|---|---|---|---|---|---|---|---|---|
| Read | 0 | PWMA1 | CAN | EMI_ MODE | $\overline{\text{RESET}}$ | IRQ | XBOOT | PWMB | PWMA0 | 0 | CTRL | 0 | JTAG | 0 | 0 | 0 |
| Write | | | | | | | | | | | | | | | | |
| RESET | 0 | 0 | 0 | 0 | 0 | 0 | 0 | 0 | 0 | 0 | 0 | 0 | 0 | 0 | 0 | 0 |

**Figure 6-8 SIM Pull-up Disable Register (SIM_PUDR)**

#### 6.5.6.1 Reserved—Bit 15

This bit field is reserved or not implemented. It is read as 0 and cannot be modified by writing.

#### 6.5.6.2 PWMA1—Bit 14

This bit controls the pull-up resistors on the FAULTA3 pin.

#### 6.5.6.3 CAN—Bit 13

This bit controls the pull-up resistors on the CAN_RX pin.

#### 6.5.6.4 EMI_MODE—Bit 12

This bit controls the pull-up resistors on the EMI_MODE pin.

**Note:** In this package, this input pin is double-bonded with the adjacent $V_{SS}$ pin and this bit should be changed to a 1 in order to reduce power consumption.

#### 6.5.6.5 $\overline{\text{RESET}}$—Bit 11

This bit controls the pull-up resistors on the $\overline{\text{RESET}}$ pin.

#### 6.5.6.6 IRQ—Bit 10

This bit controls the pull-up resistors on the $\overline{\text{IRQA}}$ and $\overline{\text{IRQB}}$ pins.

#### 6.5.6.7 XBOOT—Bit 9

This bit controls the pull-up resistors on the EXTBOOT pin.

**Note:** In this package, this input pin is double-bonded with the adjacent $V_{SS}$ pin and this bit should be changed to a 1 in order to reduce power consumption.

#### 6.5.6.8 PWMB—Bit 8

This bit controls the pull-up resistors on the FAULTB0, FAULTB1, FAULTB2, and FAULTB3 pins.

#### 6.5.6.9 PWMA0—Bit 7

This bit controls the pull-up resistors on the FAULTA0, FAULTA1, and FAULTA2 pins.

#### 6.5.6.10 Reserved—Bit 6

This bit field is reserved or not implemented. It is read as 0 and cannot be modified by writing.

#### 6.5.6.11 CTRL—Bit 5

This bit controls the pull-up resistors on the $\overline{\text{WR}}$ and $\overline{\text{RD}}$ pins.

#### 6.5.6.12 Reserved—Bit 4

This bit field is reserved or not implemented. It is read as 0 and cannot be modified by writing.

#### 6.5.6.13 JTAG—Bit 3

This bit controls the pull-up resistors on the $\overline{\text{TRST}}$, TMS and TDI pins.

#### 6.5.6.14 Reserved—Bit 2–0

This bit field is reserved or not implemented. It is read as 0 and cannot be modified by writing.

## 6.5.7 CLKO Select Register (SIM_CLKOSR)

The CLKO select register can be used to multiplex out any one of the clocks generated inside the clock generation and SIM modules. The default value is SYS_CLK. This path has been optimized in order to minimize any delay and clock duty cycle distortion. All other clocks primarily muxed out are for test purposes only, and are subject to significant phase shift at high frequencies.

The upper four bits of the GPIOB register can function as GPIO, [A23:A20], or as additional clock output signals. GPIO has priority and is enabled/disabled via the GPIOB_PER. If GPIOB[7:4] are programmed to operate as peripheral outputs, then the choice between [A23:A20] and additional clock outputs is done here in the CLKOSR. The default state is for the peripheral function of GPIOB[7:4] to be programmed as [A23:A20]. This can be changed by altering [A23:A20], as shown in **Figure 6-9**.

| Base + $A | 15 | 14 | 13 | 12 | 11 | 10 | 9 | 8 | 7 | 6 | 5 | 4 | 3 | 2 | 1 | 0 |
|---|---|---|---|---|---|---|---|---|---|---|---|---|---|---|---|---|
| Read | 0 | 0 | 0 | 0 | 0 | 0 | A23 | A22 | A21 | A20 | CLK DIS | CLKOSEL | | | | |
| Write | | | | | | | | | | | | | | | | |
| RESET | 0 | 0 | 0 | 0 | 0 | 0 | 0 | 0 | 0 | 0 | 1 | 0 | 0 | 0 | 0 | 0 |

**Figure 6-9 CLKO Select Register (SIM_CLKOSR)**

### 6.5.7.1 Reserved—Bits 15–10

This bit field is reserved or not implemented. It is read as 0 and cannot be modified by writing.

### 6.5.7.2 Alternate GPIO_B Peripheral Function for A23 (A23)—Bit 9

- 0 = Peripheral output function of GPIOB[7] is defined to be A[23]
- 1 = Peripheral output function of GPIOB[7] is defined to be the oscillator_clock (MSTR_OSC, see **Figure 3-4**)

### 6.5.7.3 Alternate GPIO_B Peripheral Function for A22 (A22)—Bit 8

- 0 = Peripheral output function of GPIOB[6] is defined to be A[22]
- 1 = Peripheral output function of GPIOB[6] is defined to be SYS_CLK2

### 6.5.7.4 Alternate GPIO_B Peripheral Function for A21 (A21)—Bit 7

- 0 = Peripheral output function of GPIOB[5] is defined to be A[21]
- 1 = Peripheral output function of GPIOB[5] is defined to be SYS_CLK

### 6.5.7.5 Alternate GPIO_B Peripheral Function for A20 (A20)—Bit 6

- 0 = Peripheral output function of GPIOB[4] is defined to be A[20]
- 1 = Peripheral output function of GPIOB[4] is defined to be the prescaler_clock (FREF, see **Figure 3-4**)

### 6.5.7.6 Clockout Disable (CLKDIS)—Bit 5

- 0 = CLKOUT output is enabled and will output the signal indicated by CLKOSEL
- 1 = CLKOUT is tri-stated

#### 6.5.7.7 CLockout Select (CLKOSEL)—Bits 4–0

Selects clock to be muxed out on the CLKO pin.

- 00000 = SYS_CLK (from OCCS - DEFAULT)
- 00001 = Reserved for factory test—56800E clock
- 00010 = Reserved for factory test—XRAM clock
- 00011 = Reserved for factory test—PFLASH odd clock
- 00100 = Reserved for factory test—PFLASH even clock
- 00101 = Reserved for factory test—BFLASH clock
- 00110 = Reserved for factory test—DFLASH clock
- 00111 = Oscillator output
- 01000 = $F_{out}$ (from OCCS)
- 01001 = Reserved for factory test—IPB clock
- 01010 = Reserved for factory test—Feedback (from OCCS, this is path to PLL)
- 01011 = Reserved for factory test—Prescaler clock (from OCCS)
- 01100 = Reserved for factory test—Postscaler clock (from OCCS)
- 01101 = Reserved for factory test—SYS_CLK2 (from OCCS)
- 01110 = Reserved for factory test—SYS_CLK_DIV2
- 01111 = Reserved for factory test—SYS_CLK_D
- 10000 = ADCA clock
- 10001 = ADCB clock

### 6.5.8 GPIO Peripheral Select Register (SIM_GPS)

Some GPIO pads can have more than one peripheral selected as the alternate function instead of GPIO. For these pads, this register selects which of the alternate peripherals are actually selected for the GPIO peripheral function. This applies to GPIOC, pins 0-3, and to GPIOD, pins 0 and 1.

The GPIOC Peripheral Select Register can be used to multiplex out any one of the three alternate peripherals for GPIOC. The default peripheral is *Quad Decoder 1* and *Quad Timer B* (NOT available in the 56F8165 device); these peripherals work together.

The four I/O pins associated with GPIOC can function as GPIO, *Quad Decoder 1/Quad Timer B*, or as SPI 1 signals. GPIO is not the default and is enabled/disabled via the GPIOC_PER, as shown in **Figure 6-10** and **Table 6-2**. When GPIOC[3:0] are programmed to operate as peripheral I/O, then the choice between decoder/timer and SPI inputs/outputs is made in the SIM_GPS and in conjunction with the Quad Timer Status and Control Registers (SCR). The default state is for the peripheral function of GPIOC[3:0] to be programmed as decoder functions. This can be changed by altering the appropriate controls in the indicated registers.

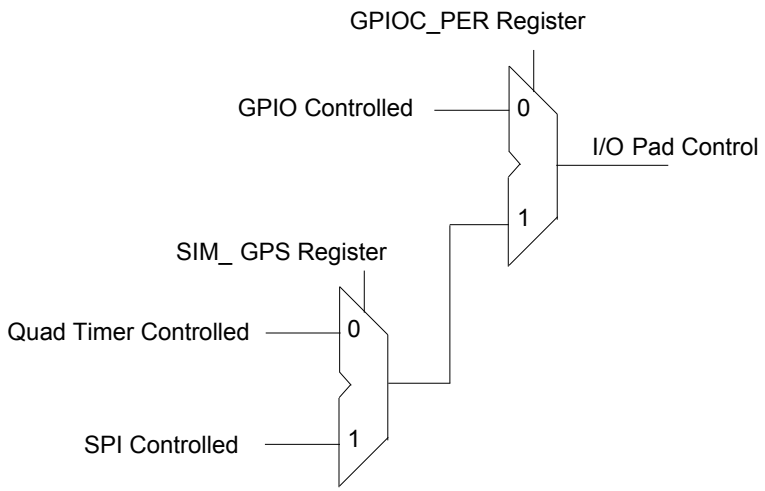


**Figure 6-10 Overall Control of GPIOC Pads Using SIM_GPS Control**

**Table 6-2 Control of GPIOC Pads Using SIM_GPS Control [1]**

| Pin Function | Control Registers | | | | Comments |
|---|---|---|---|---|---|
| | GPIOC_PER | GPIOC_DTR | SIM_GPS | Quad Timer SCR Register OEN bits | |
| GPIO Input | 0 | 0 | — | — | |
| GPIO Output | 0 | 1 | — | — | |
| Quad Timer Input / Quad Decoder Input [2] | 1 | — | 0 | 0 | See the "Switch Matrix for Inputs to the Timer" table in the **56F8300 Peripheral User Manual** for the definition of timer inputs based on the Quad Decoder mode configuration. |
| Quad Timer Output / Quad Decoder Input [3] | 1 | — | 0 | 1 | |
| SPI input | 1 | — | 1 | — | See SPI controls for determining the direction of each of the SPI pins. |
| SPI output | 1 | — | 1 | — | |

1. This applies to the four pins that serve as Quad Decoder / Quad Timer / SPI / GPIOC functions. A separate set of control bits is used for each pin.
2. Reset configuration
3. Quad Decoder pins are always inputs and function in conjunction with the Quad Timer pins.

Two Input/Output pins associated with GPIOD can function as GPIO, EMI (default peripheral) or CAN2 signals. GPIO is the default and is enabled/disabled via the GPIOD_PER, as shown in **Figure 6-11** and **Table 6-3**. When GPIOD[1:0] are programmed to operate as peripheral input/output, then the choice between EMI and CAN2 inputs/outputs is made here in the GPS.

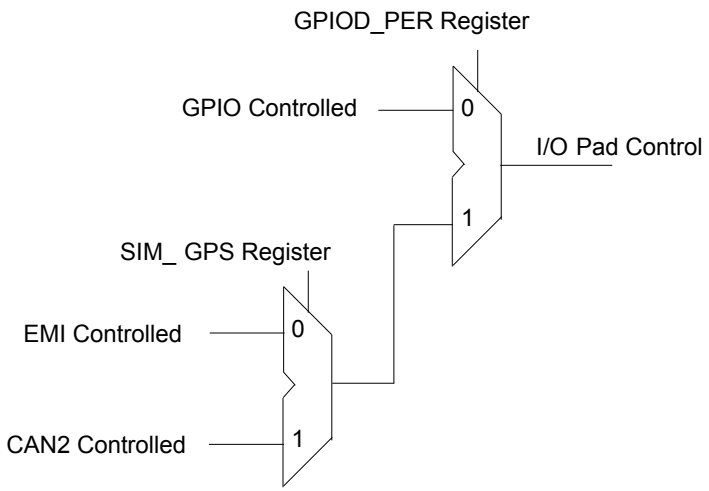


**Figure 6-11 Overall Control of GPIOD Pads Using SIM_GPS Control**

**Table 6-3 Control of GPIOD Pads Using SIM_GPS Control [1]**

| Pin Function | Control Registers | | | Comments |
|---|---|---|---|---|
| | GPIOD_PER | GPIOD_DDR | SIM_GPS | |
| GPIO Input | 0 | 0 | — | |
| GPIO Output | 0 | 1 | — | |
| EMI I/O | 1 | — | 0 | EMI $\overline{\text{CS}}$n pins are always outputs |
| CAN2 | 1 | — | 1 | CAN2_TX is always an output<br>CAN2_RX is always an input |

1. This applies to the two pins that serve as EMI $\overline{\text{CS}}$n / CAN2 / GPIOD functions. A separate set of control bits is used for each pin.

| Base + $B | 15 | 14 | 13 | 12 | 11 | 10 | 9 | 8 | 7 | 6 | 5 | 4 | 3 | 2 | 1 | 0 |
|---|---|---|---|---|---|---|---|---|---|---|---|---|---|---|---|---|
| Read | 0 | 0 | 0 | 0 | 0 | 0 | 0 | 0 | 0 | 0 | D1 | D0 | C3 | C2 | C1 | C0 |
| Write | | | | | | | | | | | | | | | | |
| RESET | 0 | 0 | 0 | 0 | 0 | 0 | 0 | 0 | 0 | 0 | 0 | 0 | 0 | 0 | 0 | 0 |

**Figure 6-12 GPIO Peripheral Select Register (SIM_GPS)**

### 6.5.8.1 Reserved—Bits 15–6

This bit field is reserved or not implemented. It is read as 0 and cannot be modified by writing.

#### 6.5.8.2 GPIOD1 (D1)—Bit 5

This bit selects the alternate function for GPIOD1.

- 0 = $\overline{CS3}$
- 1 = CAN2_RX

#### 6.5.8.3 GPIOD0 (D0)—Bit 4

- 0 = $\overline{CS2}$
- 1 = CAN2_TX

#### 6.5.8.4 GPIOC3 (C3)—Bit 3

This bit selects the alternate function for GPIOC3.

- 0 = HOME1/TB3 (default - see “Switch Matrix Mode” bits of the Quad Decoder DECCR register in the **56F8300 Peripheral User Manual**)
- 1 = $\overline{SS1}$

#### 6.5.8.5 GPIOC2 (C2)—Bit 2

This bit selects the alternate function for GPIOC2.

- 0 = INDEX1/TB2 (default)
- 1 = MISO1

#### 6.5.8.6 GPIOC1 (C1)—Bit 1

This bit selects the alternate function for GPIOC1.

- 0 = PHASEB1/TB1 (default)
- 1 = MOSI1

#### 6.5.8.7 GPIOC0 (C0)—Bit 0

This bit selects the alternate function for GPIOC0.

- 0 = PHASEA1/TB0 (default)
- 1 = SCLK1

### 6.5.9 Peripheral Clock Enable Register (SIM_PCE)

The Peripheral Clock Enable register is used to enable or disable clocks to the peripherals as a power savings feature. The clocks can be individually controlled for each peripheral on the chip.

| Base + $C | 15 | 14 | 13 | 12 | 11 | 10 | 9 | 8 | 7 | 6 | 5 | 4 | 3 | 2 | 1 | 0 |
|---|---|---|---|---|---|---|---|---|---|---|---|---|---|---|---|---|
| Read<br>Write | EMI | ADCB | ADCA | CAN | DEC1 | DEC0 | TMRD | TMRC | TMRB | TMRA | SCI1 | SCI0 | SPI1 | SPI0 | PWMB | PWMA |
| RESET | 1 | 1 | 1 | 1 | 1 | 1 | 1 | 1 | 1 | 1 | 1 | 1 | 1 | 1 | 1 | 1 |

**Figure 6-13 Peripheral Clock Enable Register (SIM_PCE)**

#### 6.5.9.1 External Memory Interface Enable (EMI)—Bit 15

Each bit controls clocks to the indicated peripheral.

- 1 = Clocks are enabled
- 0 = The clock is not provided to the peripheral (the peripheral is disabled)

#### 6.5.9.2 Analog-to-Digital Converter B Enable (ADCB)—Bit 14

Each bit controls clocks to the indicated peripheral.

- 1 = Clocks are enabled
- 0 = The clock is not provided to the peripheral (the peripheral is disabled)

#### 6.5.9.3 Analog-to-Digital Converter A Enable (ADCA)—Bit 13

Each bit controls clocks to the indicated peripheral.

- 1 = Clocks are enabled
- 0 = The clock is not provided to the peripheral (the peripheral is disabled)

#### 6.5.9.4 FlexCAN Enable (CAN)—Bit 12

Each bit controls clocks to the indicated peripheral.

- 1 = Clocks are enabled
- 0 = The clock is not provided to the peripheral (the peripheral is disabled)

#### 6.5.9.5 Decoder 1 Enable (DEC1)—Bit 11

Each bit controls clocks to the indicated peripheral.

- 1 = Clocks are enabled
- 0 = The clock is not provided to the peripheral (the peripheral is disabled)

#### 6.5.9.6 Decoder 0 Enable (DEC0)—Bit 10

Each bit controls clocks to the indicated peripheral.

- 1 = Clocks are enabled
- 0 = The clock is not provided to the peripheral (the peripheral is disabled)

#### 6.5.9.7 Quad Timer D Enable (TMRD)—Bit 9

Each bit controls clocks to the indicated peripheral.

- 1 = Clocks are enabled
- 0 = The clock is not provided to the peripheral (the peripheral is disabled)

#### 6.5.9.8 Quad Timer C Enable (TMRC)—Bit 8

Each bit controls clocks to the indicated peripheral.

- 1 = Clocks are enabled
- 0 = The clock is not provided to the peripheral (the peripheral is disabled)

#### 6.5.9.9 Quad Timer B Enable (TMRB)—Bit 7

Each bit controls clocks to the indicated peripheral.

- 1 = Clocks are enabled
- 0 = The clock is not provided to the peripheral (the peripheral is disabled)

#### 6.5.9.10 Quad Timer A Enable (TMRA)—Bit 6

Each bit controls clocks to the indicated peripheral.

- 1 = Clocks are enabled
- 0 = The clock is not provided to the peripheral (the peripheral is disabled)

#### 6.5.9.11 Serial Communications Interface 1 Enable (SCI1)—Bit 5

Each bit controls clocks to the indicated peripheral.

- 1 = Clocks are enabled
- 0 = The clock is not provided to the peripheral (the peripheral is disabled)

#### 6.5.9.12 Serial Communications Interface 0 Enable (SCI0)—Bit 4

Each bit controls clocks to the indicated peripheral.

- 1 = Clocks are enabled
- 0 = The clock is not provided to the peripheral (the peripheral is disabled)

#### 6.5.9.13 Serial Peripheral Interface 1 Enable (SPI1)—Bit 3

Each bit controls clocks to the indicated peripheral.

- 1 = Clocks are enabled
- 0 = The clock is not provided to the peripheral (the peripheral is disabled)

#### 6.5.9.14 Serial Peripheral Interface 0 Enable (SPI0)—Bit 2

Each bit controls clocks to the indicated peripheral.

- 1 = Clocks are enabled

- 0 = The clock is not provided to the peripheral (the peripheral is disabled)

#### 6.5.9.15 Pulse Width Modulator B Enable (PWMB)—Bit 1

Each bit controls clocks to the indicated peripheral.

- 1 = Clocks are enabled
- 0 = The clock is not provided to the peripheral (the peripheral is disabled)

#### 6.5.9.16 Pulse Width Modulator A Enable (PWMA)—Bit 0

Each bit controls clocks to the indicated peripheral.

- 1 = Clocks are enabled
- 0 = The clock is not provided to the peripheral (the peripheral is disabled)

### 6.5.10 I/O Short Address Location Register (SIM_ISALH and SIM_ISALL)

The I/O Short Address Location registers are used to specify the memory referenced via the I/O short address mode. The I/O short address mode allows the instruction to specify the lower six bits of address; the upper address bits are not directly controllable. This register set allows limited control of the full address, as shown in **Figure 6-14**.

**Note:** If this register is set to something other than the top of memory (EOnCE register space) and the EX bit in the OMR is set to 1, the JTAG port cannot access the on-chip EOnCE registers, and debug functions will be affected.

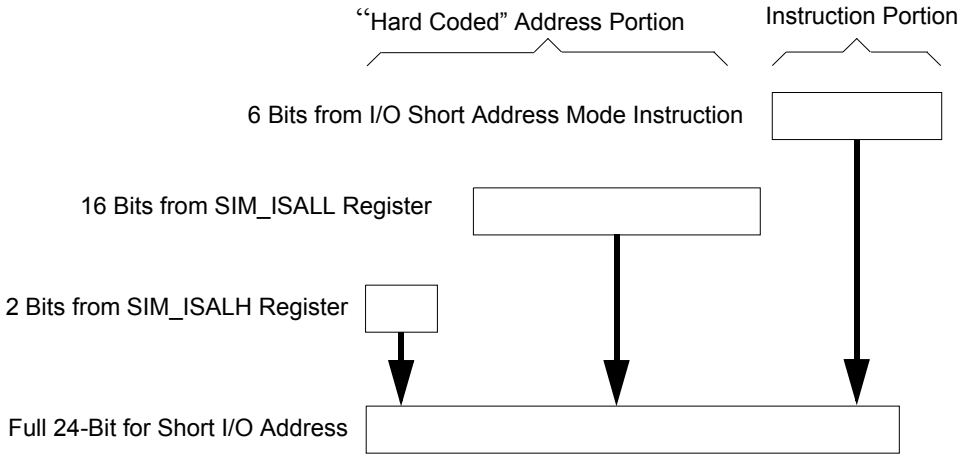


**Figure 6-14 I/O Short Address Determination**

With this register set, an interrupt driver can set the SIM_ISALL register pair to point to its peripheral registers and then use the I/O Short addressing mode to reference them. The ISR should restore this register to its previous contents prior to returning from interrupt.

**Note:** The default value of this register set points to the EOnCE registers.

**Note:** The pipeline delay between setting this register set and using short I/O addressing with the new value is three cycles.

| Base + $D | 15 | 14 | 13 | 12 | 11 | 10 | 9 | 8 | 7 | 6 | 5 | 4 | 3 | 2 | 1 | 0 |
|---|---|---|---|---|---|---|---|---|---|---|---|---|---|---|---|---|
| Read | 1 | 1 | 1 | 1 | 1 | 1 | 1 | 1 | 1 | 1 | 1 | 1 | 1 | 1 | ISAL[23:22] | |
| Write | | | | | | | | | | | | | | | | |
| RESET | 1 | 1 | 1 | 1 | 1 | 1 | 1 | 1 | 1 | 1 | 1 | 1 | 1 | 1 | 1 | 1 |

**Figure 6-15 I/O Short Address Location High Register (SIM_ISALH)**

### 6.5.10.1 Input/Output Short Address Low (ISAL[23:22])—Bit 1–0

This field represents the upper two address bits of the “hard coded” I/O short address.

| Base + $E | 15 | 14 | 13 | 12 | 11 | 10 | 9 | 8 | 7 | 6 | 5 | 4 | 3 | 2 | 1 | 0 |
|---|---|---|---|---|---|---|---|---|---|---|---|---|---|---|---|---|
| Read | ISAL[21:6] | | | | | | | | | | | | | | | |
| Write | | | | | | | | | | | | | | | | |
| RESET | 1 | 1 | 1 | 1 | 1 | 1 | 1 | 1 | 1 | 1 | 1 | 1 | 1 | 1 | 1 | 1 |

**Figure 6-16 I/O Short Address Location Low Register (SIM_ISAL)**

### 6.5.10.2 Input/Output Short Address Low (ISAL[21:6])—Bit 15–0

This field represents the lower 16 address bits of the “hard coded” I/O short address.

## 6.5.11 Peripheral Clock Enable Register 2 (SIM_PCE2)

The Peripheral Clock Enable Register 2 is used to enable or disable clocks to the peripherals as a power-saving feaure. The clocks can be individually controller for each peripheral on the chip.

| Base + $D | 15 | 14 | 13 | 12 | 11 | 10 | 9 | 8 | 7 | 6 | 5 | 4 | 3 | 2 | 1 | 0 |
|---|---|---|---|---|---|---|---|---|---|---|---|---|---|---|---|---|
| Read | 0 | 0 | 0 | 0 | 0 | 0 | 0 | 0 | 0 | 0 | 0 | 0 | 0 | 0 | 0 | CAN 2 |
| Write | | | | | | | | | | | | | | | | |
| RESET | 0 | 0 | 0 | 0 | 0 | 0 | 0 | 0 | 0 | 0 | 0 | 0 | 0 | 0 | 0 | 1 |

### 6.5.11.1 Reserved—Bits 15–1

This bit field is reserved or not implemented. It is read as 0 and cannot be modified by writing.

### 6.5.11.2 CAN2 Enable—Bit 0

Each bit controls clocks to the indicated peripheral.

- 1 = Clocks are enabled

- 0 = The clock is not provided to the peripheral (the peripheral is disabled)

## 6.6 Clock Generation Overview

The SIM uses an internal master clock from the OCCS (CLKGEN) module to produce the peripheral and system (core and memory) clocks. The maximum master clock frequency is 120MHz. Peripheral and system clocks are generated at half the master clock frequency and therefore at a maximum 60MHz. The SIM provides power modes (Stop, Wait) and clock enables (SIM_PCE register, CLK_DIS, ONCE_EBL) to control which clocks are in operation. The OCCS, power modes, and clock enables provide a flexible means to manage power consumption.

Power utilization can be minimized in several ways. In the OCCS, crystal oscillator, and PLL may be shut down when not in use. When the PLL is in use, its prescaler and postscaler can be used to limit PLL and master clock frequency. Power modes permit system and/or peripheral clocks to be disabled when unused. Clock enables provide the means to disable individual clocks. Some peripherals provide further controls to disable unused subfunctions. Refer to **Part 3 On-Chip Clock Synthesis (OCCS)**, and the **56F8300 Peripheral User Manual** for further details.

## 6.7 Power-Down Modes Overview

The 56F8365/56F8165 operates in one of three power-down modes, as shown in **Table 6-4**.

**Table 6-4 Clock Operation in Power-Down Modes**

| Mode | Core Clocks | Peripheral Clocks | Description |
|---|---|---|---|
| Run | Active | Active | Device is fully functional |
| Wait | Core and memory clocks disabled | Active | Peripherals are active and can produce interrupts if they have not been masked off.<br>Interrupts will cause the core to come out of its suspended state and resume normal operation.<br>Typically used for power-conscious applications. |
| Stop | System clocks continue to be generated in the SIM, but most are gated prior to reaching memory, core and peripherals. | | The only possible recoveries from Stop mode are:<br>1. CAN traffic (1st message will be lost)<br>2. Non-clocked interrupts<br>3. COP reset<br>4. External reset<br>5. Power-on reset |

All peripherals, except the COP/watchdog timer, run off the IPbus clock frequency, which is the same as the main processor frequency in this architecture. The maximum frequency of operation is SYS_CLK = 60MHz.

## 6.8 Stop and Wait Mode Disable Function

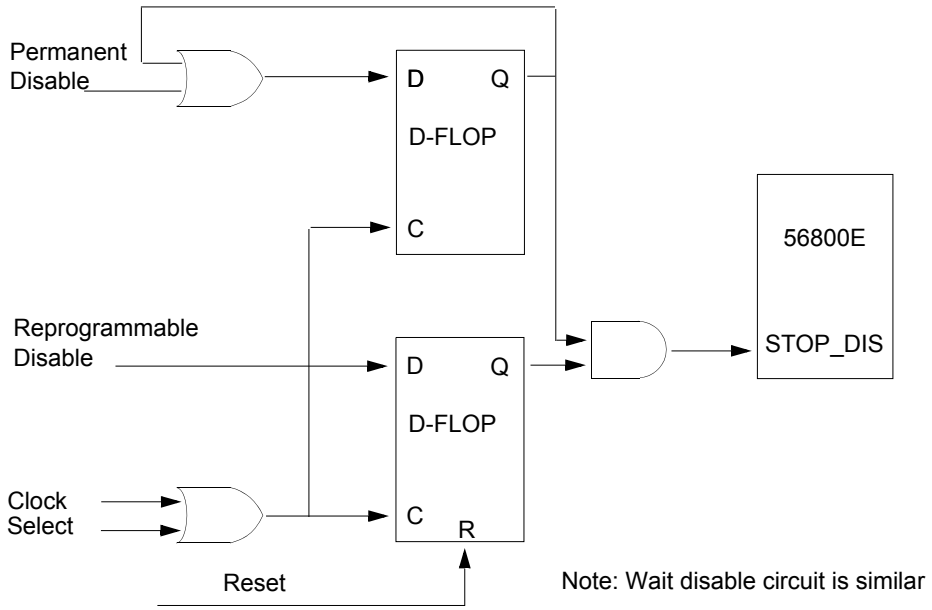


**Figure 6-17 Internal Stop Disable Circuit**

The 56800E core contains both STOP and WAIT instructions. Both put the CPU to sleep. For lowest power consumption in Stop mode, the PLL can be shut down. This must be done explicitly before entering Stop mode, since there is no automatic mechanism for this. When the PLL is shut down, the 56800E system clock must be set equal to the oscillator output.

Some applications require the 56800E STOP and WAIT instructions be disabled. To disable those instructions, write to the SIM control register (SIM_CONTROL), described in **Part 6.5.1**. This procedure can be on either a permanent or temporary basis. Permanently assigned applications last only until their next reset.

## 6.9 Resets

The SIM supports four sources of reset. The two asynchronous sources are the external $\overline{\text{RESET}}$ pin and the Power-On Reset (POR). The two synchronous sources are the software reset, which is generated within the SIM itself by writing to the SIM_CONTROL register, and the COP reset.

Reset begins with the assertion of any of the reset sources. Release of reset to various blocks is sequenced to permit proper operation of the device. A POR reset is first extended for $2^{21}$ clock cycles to permit stabilization of the clock source, followed by a 32 clock window in which SIM clocking is initiated. It is then followed by a 32 clock window in which peripherals are released to implement Flash security, and, finally, followed by a 32 clock window in which the core is initialized. After completion of the described reset sequence, application code will begin execution.

Resets may be asserted asynchronously, but are always released internally on a rising edge of the system clock.

# Part 7 Security Features

The 56F8365/56F8165 offers security features intended to prevent unauthorized users from reading the contents of the Flash Memory (FM) array. The Flash security consists of several hardware interlocks that block the means by which an unauthorized user could gain access to the Flash array.

However, part of the security must lie with the user's code. An extreme example would be user's code that dumps the contents of the internal program, as this code would defeat the purpose of security. At the same time, the user may also wish to put a "backdoor" in his program. As an example, the user downloads a security key through the SCI, allowing access to a programming routine that updates parameters stored in another section of the Flash.

## 7.1 Operation with Security Enabled

Once the user has programmed the Flash with his application code, the device can be secured by programming the security bytes located in the FM configuration field, which occupies a portion of the FM array. These non-volatile bytes will keep the part secured through reset and through power-down of the device. Only two bytes within this field are used to enable or disable security. Refer to the Flash Memory section in the **56F8300 Peripheral User Manual** for the state of the security bytes and the resulting state of security. When Flash security mode is enabled in accordance with the method described in the Flash Memory module specification, the device will disable the core EOnCE debug capabilities. Normal program execution is otherwise unaffected.

## 7.2 Flash Access Blocking Mechanisms

The 56F8365/56F8165 have several operating functional and test modes. Effective Flash security must address operating mode selection and anticipate modes in which the on-chip Flash can be compromised and read without explicit user permission. Methods to block these are outlined in the next subsections.

### 7.2.1 Forced Operating Mode Selection

At boot time, the SIM determines in which functional modes the device will operate. These are:

- Unsecured Mode
- Secure Mode (EOnCE disabled)

When Flash security is enabled as described in the Flash Memory module specification, the device will disable the EOnCE debug interface.

### 7.2.2 Disabling EOnCE Access

On-chip Flash can be read by issuing commands across the EOnCE port, which is the debug interface for the 56800E core. The $\overline{\text{TRST}}$, TCLK, TMS, TDO, and TDI pins comprise a JTAG interface onto which the EOnCE port functionality is mapped. When the device boots, the chip-level JTAG TAP (Test Access Port)

is active and provides the chip's boundary scan capability and access to the ID register.

Proper implementation of Flash security requires that no access to the EOnCE port is provided when security is enabled. The 56800E core has an input which disables reading of internal memory via the JTAG/EOnCE. The FM sets this input at reset to a value determined by the contents of the FM security bytes.

### 7.2.3 Flash Lockout Recovery

If a user inadvertently enables Flash security on the device, a built-in lockout recovery mechanism can be used to reenable access to the device. This mechanism completely reases all on-chip Flash, thus disabling Flash security. Access to this recovery mechanism is built into CodeWarrior via an instruction in memory configuration (*.cfg*) files. Add, or uncomment the following configuration command:

**unlock_flash_on_connect 1**

For more information, please see **CodeWarrior MC56F83xx/DSP5685x Family Targeting Manual**.

The LOCKOUT_RECOVERY instruction has an associated 7-bit Data Register (DR) that is used to control the clock divider circuit within the FM module. This divider, FM_CLKDIV[6:0], is used to control the period of the clock used for timed events in the FM erase algorithm. This register must be set with appropriate values before the lockout sequence can begin. Refer to the JTAG section of the **56F8300 Peripheral User Manual** for more details on setting this register value.

The value of the JTAG FM_CLKDIV[6:0] will replace the value of the FM register FMCLKD that divides down the system clock for timed events, as illustrated in **Figure 7-1**. FM_CLKDIV[6] will map to the PRDIV8 bit, and FM_CLKDIV[5:0] will map to the DIV[5:0] bits. The combination of PRDIV8 and DIV must divide the FM input clock down to a frequency of 150kHz-200kHz. The **"Writing the FMCLKD Register**" section in the Flash Memory chapter of the **56F8300 Peripheral User Manual** gives specific equations for calculating the correct values.

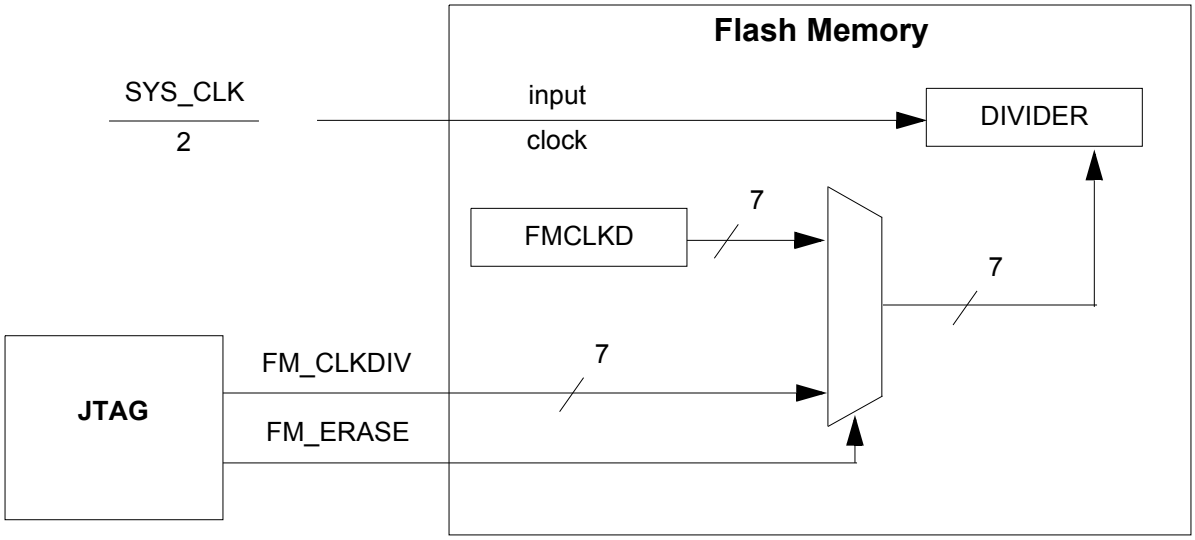


**Figure 7-1 JTAG to FM Connection for Lockout Recovery**

Two examples of FM_CLKDIV calculations follow.

**EXAMPLE 1:** If the system clock is the 8MHz crystal frequency because the PLL has not been set up, the input clock will be below 12.8MHz, so PRDIV8 = FM_CLKDIV[6] = 0. Using the following equation yields a DIV value of 19 for a clock of 200kHz, and a DIV value of 20 for a clock of 190kHz. This translates into an FM_CLKDIV[6:0] value of $13 or $14, respectively.

$$150[\text{kHz}] < \frac{\left(\frac{\text{SYS_CLK}}{(2)}\right)}{(\text{DIV} + 1)} < 200[\text{kHz}]$$

**EXAMPLE 2:** In this example, the system clock has been set up with a value of 32MHz, making the FM input clock 16MHz. Because that is greater than 12.8MHz, PRDIV = FM_CLKDIV[6] = 1. Using the following equation yields a DIV value of 9 for a clock of 200kHz, and a DIV value of 10 for a clock of 181kHz. This translates to an FM_CLKDIV[6:0] value of $49 or $4A, respectively.

$$150[\text{kHz}] < \frac{\left(\frac{\text{SYS_CLK}}{(2)(8)}\right)}{(\text{DIV} + 1)} < 200[\text{kHz}]$$

Once the LOCKOUT_RECOVERY instruction has been shifted into the instruction register, the clock divider value must be shifted into the corresponding 7-bit data register. After the data register has been updated, the user must transition the TAP controller into the RUN-TEST/IDLE state for the lockout sequence to commence. The controller must remain in this state until the erase sequence has completed.

For details, see the JTAG Section in the **56F8300 Peripheral User Manual**.

**Note:** Once the lockout recovery sequence has completed, the user must reset both the JTAG TAP controller (by asserting $\overline{\text{TRST}}$) and the device (by asserting external chip reset) to return to normal unsecured operation.

### 7.2.4 Product Analysis

The recommended method of unsecuring a programmed device for product analysis of field failures is via the backdoor key access. The customer would need to supply Technical Support with the backdoor key and the protocol to access the backdoor routine in the Flash. Additionally, the KEYEN bit that allows backdoor key access must be set.

An alternative method for performing analysis on a secured hybrid controller would be to mass-erase and reprogram the Flash with the original code, but to modify the security bytes.

To insure that a customer does not inadvertently lock himself out of the device during programming, it is recommended that he program the backdoor access key first, his application code second, and the security bytes within the FM configuration field last.

# Part 8 General Purpose Input/Output (GPIO)

## 8.1 Introduction

This section is intended to supplement the GPIO information found in the **56F8300 Peripheral User Manual** and contains only chip-specific information. This information supercedes the generic information in the **56F8300 Peripheral User Manual**.

## 8.2 Memory Maps

The width of the GPIO port defines how many bits are implemented in each of the GPIO registers. Based on this and the default function of each of the GPIO pins, the reset values of the GPIOx_PUR and GPIOx_PER registers change from port to port. Tables **4-29** through **4-34** define the actual reset values of these registers.

## 8.3 Configuration

There are six GPIO ports defined on the 56F8365/56F8165. The width of each port and the associated peripheral function is shown in **Table 8-1** and **Table 8-2**. The specific mapping of GPIO port pins is shown in **Table 8-3**.

**Table 8-1 56F8365 GPIO Ports Configuration**

| GPIO Port | Port Width | Available Pins in 56F8365 | Peripheral Function | Reset Function |
|---|---|---|---|---|
| A | 14 | 6 | 6 pins - EMI Address pins - Can only be used as GPIO<br>8 pins - EMI Address pins - Not available in this package | EMI Address<br>N/A |
| B | 8 | 5 | 5 pins - EMI Address pins - Can only be used as GPIO<br>3 pins - EMI Address pins - Not available in this package | GPIO<br>N/A |
| C | 11 | 11 | 4 pins -DEC1 / TMRB / SPI1<br>4 pins -DEC0 / TMRA<br>3 pins -PWMA current sense | DEC1 / TMRB<br>DEC0 / TMRA<br>PWMA current sense |
| D | 13 | 11 | 2 pins - EMI $\overline{CSn}$<br>4 pins - EMI $\overline{CSn}$ - Can only be used as GPIO<br>2 pins - SCI1<br>2 pins - EMI $\overline{CSn}$ - Not available in this package<br>3 pins -PWMB current sense | EMI Chip Selects<br>EMI Chip Selects<br>SCI1<br>N/A<br>PWMB current sense |
| E | 14 | 12 | 2 pins - SCI0<br>2 pins - EMI Address pins - Not available in this package<br>4 pins - SPI0<br>2 pins - TMRC<br>4 pins - TMRD | SCI0<br>N/A<br>SPI0<br>TMRC<br>TMRD |

## Table 8-1 56F8365 GPIO Ports Configuration

| GPIO Port | Port Width | Available Pins in 56F8365 | Peripheral Function | Reset Function |
|---|---|---|---|---|
| F | 16 | 4 | 4 pins - EMI Data - Can only be used as GPIO<br>12 pins - EMI Data - Not available in this package | EMI Data<br>N/A |

## Table 8-2 56F8165 GPIO Ports Configuration

| GPIO Port | Port Width | Available Pins in 56F8165 | Peripheral Function | Reset Function |
|---|---|---|---|---|
| A | 14 | 6 | 6 pins - EMI Address pins - Can only be used as GPIO<br>8 pins - EMI Address pins - Not available in this package | EMI Address<br>N/A |
| B | 8 | 5 | 5 pins - EMI Address pins - Can only be used as GPIO<br>3 pins - EMI Address pins - Not available in this package | GPIO<br>N/A |
| C | 11 | 11 | 4 pins - SPI1<br>4 pins - DEC0 / TMRA<br>3 pins - Dedicated GPIO | DEC1 / TMRB<br>DEC0 / TMRA<br>GPIO |
| D | 13 | 11 | 6 pins - EMI $\overline{\text{CSn}}$ - Can only be used as GPIO<br>2 pins - SCI1<br>2 pins - EMI $\overline{\text{CSn}}$ - Not available in this package<br>3 pins - PWMB current sense | EMI Chip Selects<br>SCI1<br>N/A<br>PWMB current sense |
| E | 14 | 12 | 2 pins - SCI0<br>2 pins - EMI Address pins - Not available in this package<br>4 pins - SPI0<br>2 pins - TMRC<br>4 pins - Dedicated GPIO | SCI0<br>N/A<br>SPI0<br>TMRC<br>GPIO |
| F | 16 | 4 | 4 pins - EMI Data - Can only be used as GPIO<br>12 pins - EMI Data - Not available in this package | EMI Data<br>N/A |

## Table 8-3 GPIO External Signals Map

**Pins in shaded rows are not available in 56F8365 / 56F8165**

***Pins in italics are NOT available in the 56F8165 device***

| GPIO Port | GPIO Bit | Reset Function | Functional Signal | Package Pin # |
|---|---|---|---|---|
| GPIOA | 0 | Peripheral | A8[1] | 15 |
| | 1 | Peripheral | A9[1] | 16 |
| | 2 | Peripheral | A10[1] | 17 |
| | 3 | Peripheral | A11[1] | 18 |
| | 4 | Peripheral | A12[1] | 19 |
| | 5 | Peripheral | A13[1] | 20 |
| | 6 | N/A | | |
| | 7 | N/A | | |
| | 8 | N/A | | |
| | 9 | N/A | | |
| | 10 | N/A | | |
| | 11 | N/A | | |
| | 12 | N/A | | |
| | 13 | N/A | | |
| GPIOB | 0 | GPIO | A16[1] | 27 |
| | 1 | GPIO | A17[1] | 28 |
| | 2 | GPIO | A18[1] | 29 |
| | 3 | GPIO | A19[1] | 30 |
| | 4 | GPIO | A20 / Prescaler_clock | 31 |
| | 5 | N/A | | |
| | 6 | N/A | | |
| | 7 | N/A | | |

## Table 8-3 GPIO External Signals Map (Continued)

**Pins in shaded rows are not available in 56F8365 / 56F8165**

***Pins in italics are NOT available in the 56F8165 device***

| GPIO Port | GPIO Bit | Reset Function | Functional Signal | Package Pin # |
|---|---|---|---|---|
| GPIOC | 0 | Peripheral | *PhaseA1 / TB0* / SCLK1[2] | 9 |
| | 1 | Peripheral | *PhaseB1 / TB1* / MOSI1[2] | 10 |
| | 2 | Peripheral | *Index1 / TB2* / MISO1[2] | 11 |
| | 3 | Peripheral | *Home1 / TB3* / $\overline{SS1}$[2] | 12 |
| | 4 | Peripheral | PhaseA0 / TA0 | 127 |
| | 5 | Peripheral | PhaseB0 / TA1 | 128 |
| | 6 | Peripheral | Index0 / TA2 | 1 |
| | 7 | Peripheral | Home0 / TA3 | 2 |
| | 8 | Peripheral | *ISA0* | 104 |
| | 9 | Peripheral | *ISA1* | 105 |
| | 10 | Peripheral | *ISA2* | 106 |
| GPIO D | 0 | GPIO | $\overline{CS2}$ / *CAN2_TX* | 42 |
| | 1 | GPIO | $\overline{CS3}$ / *CAN2_RX* | 43 |
| | 2 | GPIO | $\overline{CS4}$[1] | 44 |
| | 3 | GPIO | $\overline{CS5}$[1] | 45 |
| | 4 | GPIO | $\overline{CS6}$[1] | 46 |
| | 5 | GPIO | $\overline{CS7}$[1] | 47 |
| | 6 | Peripheral | TXD1 | 40 |
| | 7 | Peripheral | RXD1 | 41 |
| | 8 | N/A | | |
| | 9 | N/A | | |
| | 10 | Peripheral | ISB0 | 48 |
| | 11 | Peripheral | ISB1 | 50 |
| | 12 | Peripheral | ISB2 | 51 |

## Table 8-3 GPIO External Signals Map (Continued)

**Pins in shaded rows are not available in 56F8365 / 56F8165**

***Pins in italics are NOT available in the 56F8165 device***

| GPIO Port | GPIO Bit | Reset Function | Functional Signal | Package Pin # |
|---|---|---|---|---|
| GPIOE | 0 | Peripheral | TXD0 | 7 |
| | 1 | Peripheral | RXD0 | 8 |
| | 2 | N/A | | |
| | 3 | N/A | | |
| | 4 | Peripheral | SCLK0 | 124 |
| | 5 | Peripheral | MOSI0 | 126 |
| | 6 | Peripheral | MISO0 | 125 |
| | 7 | Peripheral | $\overline{SS0}$ | 123 |
| | 8 | Peripheral | TC0 | 111 |
| | 9 | Peripheral | TC1 | 113 |
| | 10 | Peripheral | *TD0* | 107 |
| | 11 | Peripheral | *TD1* | 108 |
| | 12 | Peripheral | *TD2* | 109 |
| | 13 | Peripheral | *TD3* | 110 |

**Table 8-3 GPIO External Signals Map (Continued)**
**Pins in shaded rows are not available in 56F8365 / 56F8165**
***Pins in italics are NOT available in the 56F8165 device***

| GPIO Port | GPIO Bit | Reset Function | Functional Signal | Package Pin # |
|---|---|---|---|---|
| GPIOF | 0 | Peripheral | D7[1] | 22 |
| | 1 | Peripheral | D8[1] | 23 |
| | 2 | Peripheral | D9[1] | 24 |
| | 3 | Peripheral | D10[1] | 26 |
| | 4 | N/A | | |
| | 5 | N/A | | |
| | 6 | N/A | | |
| | 7 | N/A | | |
| | 8 | N/A | | |
| | 9 | N/A | | |
| | 10 | N/A | | |
| | 11 | N/A | | |
| | 12 | N/A | | |
| | 13 | N/A | | |
| | 14 | N/A | | |
| | 15 | N/A | | |

1. Not useful in reset configuration in this package - reconfigure as GPIO
2. See Part 6.5.8 to determine how to select peripherals from this set; DEC1 is the selected peripheral at reset

# Part 9 Joint Test Action Group (JTAG)

## 9.1 JTAG Information

Please contact your Freescale marketing representative or authorized distributor for device/package-specific BSDL information.

# Part 10 Specifications

## 10.1 General Characteristics

The 56F8365/56F8165 are fabricated in high-density CMOS with 5V-tolerant TTL-compatible digital

inputs. The term “5V-tolerant” refers to the capability of an I/O pin, built on a 3.3V-compatible process technology, to withstand a voltage up to 5.5V without damaging the device. Many systems have a mixture of devices designed for 3.3V and 5V power supplies. In such systems, a bus may carry both 3.3V- and 5V-compatible I/O voltage levels (a standard 3.3V I/O is designed to receive a maximum voltage of 3.3V ± 10% during normal operation without causing damage). This 5V-tolerant capability therefore offers the power savings of 3.3V I/O levels combined with the ability to receive 5V levels without damage.

Absolute maximum ratings in **Table 10-1** are stress ratings only, and functional operation at the maximum is not guaranteed. Stress beyond these ratings may affect device reliability or cause permanent damage to the device.

**Note: All specifications meet both Automotive and Industrial requirements unless individual specifications are listed.**

**Note:** *The 56F8165 device is guaranteed to 40MHz and specified to meet Industrial requirements only.*

**CAUTION**

**This device contains protective circuitry to guard against damage due to high static voltage or electrical fields. However, normal precautions are advised to avoid application of any voltages higher than maximum-rated voltages to this high-impedance circuit. Reliability of operation is enhanced if unused inputs are tied to an appropriate voltage level.**

**Note:** *The 56F8165 device is specified to meet Industrial requirements only; CAN is NOT available on the 56F8165 device.*

### Table 10-1 Absolute Maximum Ratings

($V_{SS} = V_{SSA_ADC} = 0$)

| Characteristic | Symbol | Notes | Min | Max | Unit |
|---|---|---|---|---|---|
| Supply voltage | $V_{DD_IO}$ | | - 0.3 | 4.0 | V |
| ADC Supply Voltage | $V_{DDA_ADC}$, $V_{REFH}$ | $V_{REFH}$ must be less than or equal to $V_{DDA_ADC}$ | - 0.3 | 4.0 | V |
| Oscillator / PLL Supply Voltage | $V_{DDA_OSC_PLL}$ | | - 0.3 | 4.0 | V |
| Internal Logic Core Supply Voltage | $V_{DD_CORE}$ | OCR_DIS is High | - 0.3 | 3.0 | V |
| Input Voltage (digital) | $V_{IN}$ | Pin Groups 1, 2, 5, 6, 9, 10 | -0.3 | 6.0 | V |
| Input Voltage (analog) | $V_{INA}$ | Pin Groups 11, 12, 13 | -0.3 | 4.0 | V |

## Table 10-1 Absolute Maximum Ratings (Continued)

($V_{SS}$ = $V_{SSA_ADC}$ = 0)

| Characteristic | Symbol | Notes | Min | Max | Unit |
|---|---|---|---|---|---|
| Output Voltage | $V_{OUT}$ | Pin Groups 1, 2, 3, 4, 5, 6, 7, 8 | -0.3 | 4.0<br>6.0[1] | V |
| Output Voltage (open drain) | $V_{OD}$ | Pin Group 4 | -0.3 | 6.0 | V |
| Ambient Temperature (Automotive) | $T_A$ | | -40 | 125 | °C |
| Ambient Temperature (Industrial) | $T_A$ | | -40 | 105 | °C |
| Junction Temperature (Automotive) | $T_J$ | | -40 | 150 | °C |
| Junction Temperature (Industrial) | $T_J$ | | -40 | 125 | °C |
| Storage Temperature (Automotive) | $T_{STG}$ | | -55 | 150 | °C |
| Storage Temperature (Industrial) | $T_{STG}$ | | -55 | 150 | °C |

1. If corresponding GPIO pin is configured as open drain.

**Note:** *Pins in italics are NOT available in the 56F8165 device.*

Pin Group 1: TXD0-1, RXD0-1, $\overline{SS0}$, MISO0, MOSI0

Pin Group 2: PHASEA0, *PHASEA1*, PHASEB0, *PHASEB1*, INDEX0, *INDEX1*, HOME0, *HOME1*, ISB0-2, *ISA0-2*, *TD2-3*, TC0-1, TDO, SCLK0

Pin Group 3: $\overline{RSTO}$, TDO

Pin Group 4: *CAN_TX*

Pin Group 5: D0-15, GPIOD0-5

Pin Group 6: A8-15, GPIOB0-4, TD0-1

Pin Group 7: CLKO

Pin Group 8: *PWMA0-5*, PWMB0-5

Pin Group 9: $\overline{IRQA}$, $\overline{IRQB}$, $\overline{RESET}$, EXTBOOT, $\overline{TRST}$, TMS, TDI, *CAN_RX*, EMI_MODE, *FAULTA0-3*, FAULTB0-3

Pin Group 10: TCK

Pin Group 11: XTAL, EXTAL

Pin Group 12: ANA0-7, ANB0-7

Pin Group 13: OCR_DIS, CLKMODE

## Table 10-2 56F8365/56F8165 ElectroStatic Discharge (ESD) Protection

| Characteristic | Min | Typ | Max | Unit |
|---|---|---|---|---|
| ESD for Human Body Model (HBM) | 2000 | — | — | V |
| ESD for Machine Model (MM) | 200 | — | — | V |
| ESD for Charge Device Model (CDM) | 500 | — | — | V |

## Table 10-3 Thermal Characteristics[6]

| Characteristic | Comments | Symbol | Value | Unit | Notes |
|---|---|---|---|---|---|
| | | | 128-pin LQFP | | |
| Junction to ambient<br>Natural convection | | $R_{\theta JA}$ | 50.8 | °C/W | 2 |
| Junction to ambient (@1m/sec) | | $R_{\theta JMA}$ | 46.5 | °C/W | 2 |
| Junction to ambient<br>Natural convection | Four layer board (2s2p) | $R_{\theta JMA}$<br>(2s2p) | 43.9 | °C/W | 1,2 |
| Junction to ambient (@1m/sec) | Four layer board (2s2p) | $R_{\theta JMA}$ | 41.7 | °C/W | 1,2 |
| Junction to case | | $R_{\theta JC}$ | 13.9 | °C/W | 3 |
| Junction to center of case | | $\Psi_{JT}$ | 1.2 | °C/W | 4, 5 |
| I/O pin power dissipation | | $P_{I/O}$ | User-determined | W | |
| Power dissipation | | $P_D$ | $P_D = (I_{DD} \times V_{DD} + P_{I/O})$ | W | |
| Maximum allowed $P_D$ | | $P_{DMAX}$ | (TJ - TA) / RθJA[7] | W | |

1. Theta-JA determined on 2s2p test boards is frequently lower than would be observed in an application. Determined on 2s2p thermal test board.
2. Junction to ambient thermal resistance, Theta-JA ($R_{\theta JA}$) was simulated to be equivalent to the JEDEC specification JESD51-2 in a horizontal configuration in natural convection. Theta-JA was also simulated on a thermal test board with two internal planes (2s2p, where “s” is the number of signal layers and “p” is the number of planes) per JESD51-6 and JESD51-7. The correct name for Theta-JA for forced convection or with the non-single layer boards is Theta-JMA.
3. Junction to case thermal resistance, Theta-JC ($R_{\theta JC}$ ), was simulated to be equivalent to the measured values using the cold plate technique with the cold plate temperature used as the "case" temperature. The basic cold plate measurement technique is described by MIL-STD 883D, Method 1012.1. This is the correct thermal metric to use to calculate thermal performance when the package is being used with a heat sink.
4. Thermal Characterization Parameter, Psi-JT ($\Psi_{JT}$ ), is the "resistance" from junction to reference point thermocouple on top center of case as defined in JESD51-2. $\Psi_{JT}$ is a useful value to use to estimate junction temperature in steady-state customer environments.
5. Junction temperature is a function of on-chip power dissipation, package thermal resistance, mounting site (board) temperature, ambient temperature, air flow, power dissipation of other components on the board, and board thermal resistance.
6. See **Part 12.1** for more details on thermal design considerations.

7. TJ = Junction temperature
TA = Ambient temperature

**Note:** *The 56F8165 device is guaranteed to 40MHz and specified to meet Industrial requirements only; CAN is NOT available on the 56F8165 device.*

## Table 10-4 Recommended Operating Conditions

($V_{REFLO}$ = 0V, $V_{SS}$ = $V_{SSA_ADC}$ = 0V, $V_{DDA}$ = $V_{DDA_ADC}$ = $V_{DDA_OSC_PLL}$ )

| Characteristic | Symbol | Notes | Min | Typ | Max | Unit |
|---|---|---|---|---|---|---|
| Supply voltage | $V_{DD_IO}$ | | 3 | 3.3 | 3.6 | V |
| ADC Supply Voltage | $V_{DDA_ADC}$, $V_{REFH}$ | $V_{REFH}$ must be less than or equal to $V_{DDA_ADC}$ | 3 | 3.3 | 3.6 | V |
| Oscillator / PLL Supply Voltage | $V_{DDA_OSC_PLL}$ | | 3 | 3.3 | 3.6 | V |
| Internal Logic Core Supply Voltage | $V_{DD_CORE}$ | OCR_DIS is High | 2.25 | 2.5 | 2.75 | V |
| Device Clock Frequency | FSYSCLK | | 0 | — | 60 | MHz |
| Input High Voltage (digital) | $V_{IN}$ | Pin Groups 1, 2, 5, 6, 9, 10 | 2 | — | 5.5 | V |
| Input High Voltage (analog) | $V_{IHA}$ | Pin Group 13 | 2 | — | $V_{DDA}$+0.3 | V |
| Input High Voltage (XTAL/EXTAL, XTAL is not driven by an external clock) | $V_{IHC}$ | Pin Group 11 | $V_{DDA}$-0.8 | — | $V_{DDA}$+0.3 | V |
| Input high voltage (XTAL/EXTAL, XTAL is driven by an external clock) | $V_{IHC}$ | Pin Group 11 | 2 | — | $V_{DDA}$+0.3 | V |
| Input Low Voltage | $V_{IL}$ | Pin Groups 1, 2, 5, 6, 9, 10, 11, 13 | -0.3 | — | .8 | V |
| Output High Source Current $V_{OH}$ = 2.4V ($V_{OH}$ min.) | $I_{OH}$ | Pin Groups 1, 2, 3 | — | — | -4 | mA |
| | | Pin Groups 5, 6, 7 | — | — | -8 | |
| | | Pin Groups 8 | — | — | -12 | |
| Output Low Sink Current $V_{OL}$ = 0.4V ($V_{OL}$ max) | $I_{OL}$ | Pin Groups 1, 2, 3, 4 | — | — | 4 | mA |
| | | Pin Groups 5, 6, 7 | — | — | 8 | |
| | | Pin Group 8 | — | — | 12 | |
| Ambient Operating Temperature (Automotive) | $T_A$ | | -40 | — | 125 | °C |
| Ambient Operating Temperature (Industrial) | $T_A$ | | -40 | — | 105 | °C |
| Flash Endurance (Automotive) (Program Erase Cycles) | $N_F$ | $T_A$ = -40°C to 125°C | 10,000 | — | — | Cycles |
| Flash Endurance (Industrial) (Program Erase Cycles) | $N_F$ | $T_A$ = -40°C to 105°C | 10,000 | — | — | Cycles |
| Flash Data Retention (Automotive) | $T_R$ | $T_J$ <= 85°C avg | 15 | — | — | Years |

**Note:** Total chip source or sink current cannot exceed 200mA

See Pin Groups listed in **Table 10-1**

## 10.2 DC Electrical Characteristics

**Note:** *The 56F8165 device is specified to meet Industrial requirements only; CAN is NOT available on the 56F8165 device.*

**Table 10-5 DC Electrical Characteristics**

At Recommended Operating Conditions; see Table 10-4

| Characteristic | Symbol | Notes | Min | Typ | Max | Unit | Test Conditions |
|---|---|---|---|---|---|---|---|
| Output High Voltage | $V_{OH}$ | | 2.4 | — | — | V | $I_{OH} = I_{OHmax}$ |
| Output Low Voltage | $V_{OL}$ | | — | — | 0.4 | V | $I_{OL} = I_{OLmax}$ |
| Digital Input Current High pull-up enabled or disabled | $I_{IH}$ | Pin Groups 1, 2, 5, 6, 9 | — | 0 | +/- 2.5 | µA | $V_{IN}$ = 3.0V to 5.5V |
| Digital Input Current High with pull-down | $I_{IH}$ | Pin Group 10 | 40 | 80 | 160 | µA | $V_{IN}$ = 3.0V to 5.5V |
| Analog Input Current High | $I_{IHA}$ | Pin Group 13 | — | 0 | +/- 2.5 | µA | $V_{IN} = V_{DDA}$ |
| ADC Input Current High | $I_{IHADC}$ | Pin Group 12 | — | 0 | +/- 3.5 | µA | $V_{IN} = V_{DDA}$ |
| Digital Input Current Low pull-up enabled | $I_{IL}$ | Pin Groups 1, 2, 5, 6, 9 | -200 | -100 | -50 | µA | $V_{IN}$ = 0V |
| Digital Input Current Low pull-up disabled | $I_{IL}$ | Pin Groups 1, 2, 5, 6, 9 | — | 0 | +/- 2.5 | µA | $V_{IN}$ = 0V |
| Digital Input Current Low with pull-down | $I_{IL}$ | Pin Group 10 | — | 0 | +/- 2.5 | µA | $V_{IN}$ = 0V |
| Analog Input Current Low | $I_{ILA}$ | Pin Group 13 | — | 0 | +/- 2.5 | µA | $V_{IN}$ = 0V |
| ADC Input Current Low | $I_{ILADC}$ | Pin Group 12 | — | 0 | +/- 3.5 | µA | $V_{IN}$ = 0V |
| EXTAL Input Current Low clock input | $I_{EXTAL}$ | | — | 0 | +/- 2.5 | µA | $V_{IN} = V_{DD}$ or 0V |
| XTAL Input Current Low clock input | $I_{XTAL}$ | CKLMODE = High | — | 0 | +/- 2.5 | µA | $V_{IN} = V_{DDA}$ or 0V |
| | | CKLMODE = Low | — | — | 200 | µA | $V_{IN} = V_{DDA}$ or 0V |
| Output Current High Impedance State | $I_{OZ}$ | Pin Groups 1, 2, 3, 4, 5, 6, 7, 8 | — | 0 | +/- 2.5 | µA | $V_{OUT}$ = 3.0V to 5.5V or 0V |
| Schmitt Trigger Input Hysteresis | $V_{HYS}$ | Pin Groups 2, 6, 9,10 | — | 0.3 | — | V | — |
| Input Capacitance (EXTAL/XTAL) | $C_{INC}$ | | — | 4.5 | — | pF | — |
| Output Capacitance (EXTAL/XTAL) | $C_{OUTC}$ | | — | 5.5 | — | pF | — |
| Input Capacitance | $C_{IN}$ | | — | 6 | — | pF | — |

## Table 10-5 DC Electrical Characteristics (Continued)

At Recommended Operating Conditions; see Table 10-4

| Characteristic | Symbol | Notes | Min | Typ | Max | Unit | Test Conditions |
|---|---|---|---|---|---|---|---|
| Output Capacitance | $C_{OUT}$ | | — | 6 | — | pF | — |

See Pin Groups listed in Table 10-1

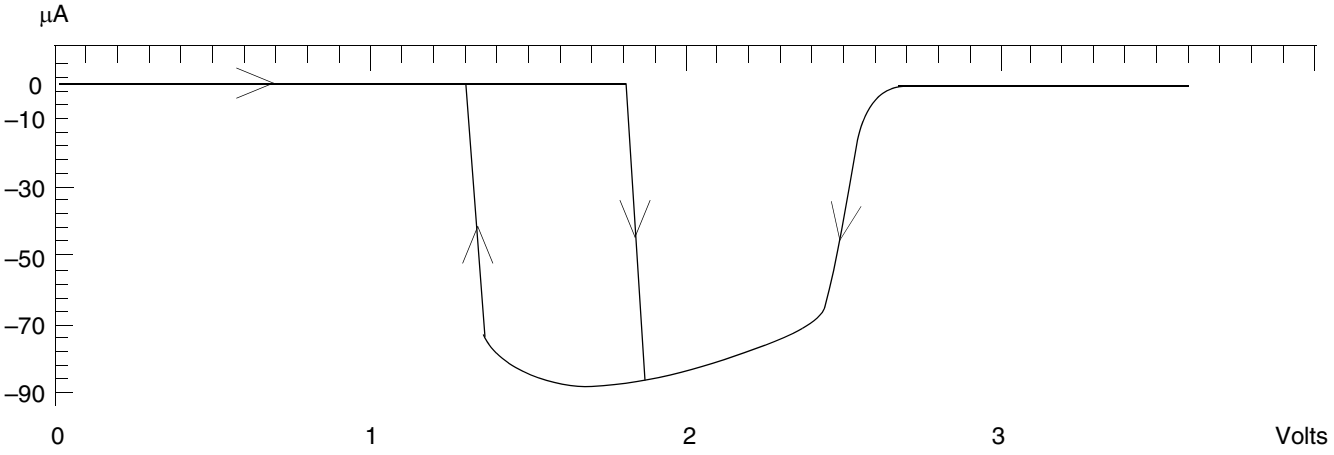


**Figure 10-1 Maximum Current — Schmitt Input DC Response –40 °C, 3.6 V**

## Table 10-6 Power-On Reset Low Voltage Parameters

| Characteristic | Symbol | Min | Typ | Max | Units |
|---|---|---|---|---|---|
| POR Trip Point | POR | 1.75 | 1.8 | 1.9 | V |
| LVI, 2.5 volt Supply, trip point[1] | $V_{EI2.5}$ | — | 2.14 | — | V |
| LVI, 3.3 volt supply, trip point[2] | $V_{EI3.3}$ | — | 2.7 | — | V |
| Bias Current | $I_{bias}$ | — | 110 | 130 | µA |

1. When $V_{DD_CORE}$ drops below $V_{EI2.5}$, an interrupt is generated.
2. When $V_{DD_CORE}$ drops below $V_{EI3.3}$, an interrupt is generated.

## Table 10-7 Current Consumption per Power Supply Pin (Typical)
### On-Chip Regulator Enabled (OCR_DIS = Low)

| Mode | $I_{DD_IO}$[1] | $I_{DD_ADC}$ | $I_{DD_OSC_PLL}$ | Test Conditions |
|---|---|---|---|---|
| RUN1_MAC | 155mA | 50mA | 2.5mA | • 60MHz Device Clock<br>• All peripheral clocks are enabled<br>• All peripherals running<br>• Continuous MAC instructions with fetches from Data RAM<br>• ADC powered on and clocked |
| Wait3 | 91mA | 70μA | 2.5mA | • 60MHz Device Clock<br>• All peripheral clocks are enabled<br>• ADC powered off |
| Stop1 | 6mA | 0μA | 165μA | • 8MHz Device Clock<br>• All peripheral clocks are off<br>• ADC powered off<br>• PLL powered off |
| Stop2 | 5.1mA | 0μA | 155μA | • External Clock is off<br>• All peripheral clocks are off<br>• ADC powered off<br>• PLL powered off |

1. No Output Switching
2. Includes Processor Core current supplied by internal voltage regulator

## Table 10-8 Current Consumption per Power Supply Pin (Typical)
### On-Chip Regulator Disabled (OCR_DIS = High)

| Mode | $I_{DD_Core}$ | $I_{DD_IO}$[1] | $I_{DD_ADC}$ | $I_{DD_OSC_PLL}$ | Test Conditions |
|---|---|---|---|---|---|
| RUN1_MAC | 150mA | 13μA | 50mA | 2.5mA | • 60MHz Device Clock<br>• All peripheral clocks are enabled<br>• All peripherals running<br>• Continuous MAC instructions with fetches from Data RAM<br>• ADC powered on and clocked |
| Wait3 | 86mA | 13μA | 70μA | 2.5mA | • 60MHz Device Clock<br>• All peripheral clocks are enabled<br>• ADC powered off |

## Table 10-8 Current Consumption per Power Supply Pin (Typical)
### On-Chip Regulator Disabled (OCR_DIS = High)

| Mode | $I_{DD_Core}$ | $I_{DD_IO}$[1] | $I_{DD_ADC}$ | $I_{DD_OSC_PLL}$ | Test Conditions |
|---|---|---|---|---|---|
| Stop1 | 950μA | 13μA | 0μA | 165μA | • 8MHz Device Clock<br>• All peripheral clocks are off<br>• ADC powered off<br>• PLL powered off |
| Stop2 | 100μA | 13μA | 0μA | 155μA | • External Clock is off<br>• All peripheral clocks are off<br>• ADC powered off<br>• PLL powered off |

1. No Output Switching

## Table 10-9. Regulator Parameters

| Characteristic | Symbol | Min | Typical | Max | Unit |
|---|---|---|---|---|---|
| Unloaded Output Voltage (0mA Load) | $V_{RNL}$ | 2.25 | — | 2.75 | V |
| Loaded Output Voltage (200mA load) | $V_{RL}$ | 2.25 | — | 2.75 | V |
| Line Regulation @ 250mA load ($V_{DD}$33 ranges from 3.0V to 3.6V) | $V_R$ | 2.25 | — | 2.75 | V |
| Short Circuit Current (output shorted to ground) | Iss | — | — | 700 | mA |
| Bias Current | $I_{bias}$ | — | 5.8 | 7 | mA |
| Power-down Current | $I_{pd}$ | — | 0 | 2 | μA |
| Short-Circuit Tolerance (output shorted to ground) | $T_{RSC}$ | — | — | 30 | minutes |

## Table 10-10. PLL Parameters

| Characteristics | Symbol | Min | Typical | Max | Unit |
|---|---|---|---|---|---|
| PLL Start-up time | $T_{PS}$ | 0.3 | 0.5 | 10 | ms |
| Resonator Start-up time | $T_{RS}$ | 0.1 | 0.18 | 1 | ms |
| Min-Max Period Variation | $T_{PV}$ | 120 | — | 200 | ps |

**Table 10-10. PLL Parameters**

| Characteristics | Symbol | Min | Typical | Max | Unit |
|---|---|---|---|---|---|
| Peak-to-Peak Jitter | $T_{PJ}$ | — | — | 175 | ps |
| Bias Current | $I_{BIAS}$ | — | 1.5 | 2 | mA |
| Quiescent Current, power-down mode | $I_{PD}$ | — | 100 | 150 | μA |

## 10.2.1 Temperature Sensor

**Note:** *Temperature Sensor is NOT available in the 56F8165 device.*

**Table 10-11 Temperature Sense Parametrics**

| Characteristics | Symbol | Min | Typical | Max | Unit |
|---|---|---|---|---|---|
| Slope (Gain)[1] | m | — | 7.762 | — | mV/°C |
| Room Trim Temp. [1, 2] | $T_{RT}$ | 24 | 26 | 28 | °C |
| Hot Trim Temp. (Industrial)[1,2] | $T_{HT}$ | 122 | 125 | 128 | °C |
| Hot Trim Temp. (Automotive)[1,2] | $T_{HT}$ | 147 | 150 | 153 | °C |
| Output Voltage @ $V_{DDA_ADC}$ = 3.3V, $T_J$ =0°C[1] | $V_{TS0}$ | — | 1.370 | — | V |
| Supply Voltage | $V_{DDA_ADC}$ | 3.0 | 3.3 | 3.6 | V |
| Supply Current - OFF | $I_{DD\text{-}OFF}$ | — | — | 10 | μA |
| Supply Current - ON | $I_{DD\text{-}ON}$ | — | — | 250 | μA |
| Accuracy[3,1] from -40°C to 150°C Using $V_{TS} = mT + V_{TS0}$ | $T_{ACC}$ | -6.7 | 0 | 6.7 | °C |
| Resolution[4, 5,1] | $R_{ES}$ | — | 0.104 | — | °C / bit |

1. Includes the ADC conversion of the analog Temperature Sense voltage.
2. The ADC is not calibrated for the conversion of the Temperature Sensor trim value stored in the Flash Memory at FMOPT0 and FMOPT1.
3. See Application Note, AN1980, for methods to increase accuracy.
4. Assuming a 12-bit range from 0V to 3.3V.
5. Typical resolution calculated using equation:

$$R_{ES} = \frac{(V_{REFH} - V_{REFLO})}{2^{12}} \times \frac{1}{m}$$

## 10.3 AC Electrical Characteristics

Tests are conducted using the input levels specified in **Table 10-5**. Unless otherwise specified, propagation delays are measured from the 50% to the 50% point, and rise and fall times are measured between the 10% and 90% points, as shown in **Figure 10-2**.

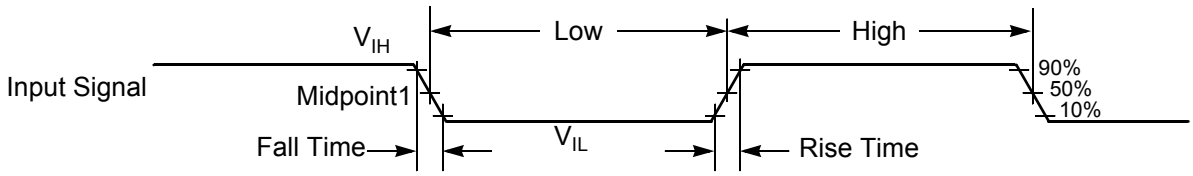


Note: The midpoint is $V_{IL} + (V_{IH} – V_{IL})/2$.

**Figure 10-2 Input Signal Measurement References**

**Figure 10-3** shows the definitions of the following signal states:

- Active state, when a bus or signal is driven, and enters a low impedance state
- Tri-stated, when a bus or signal is placed in a high impedance state
- Data Valid state, when a signal level has reached $V_{OL}$ or $V_{OH}$
- Data Invalid state, when a signal level is in transition between $V_{OL}$ and $V_{OH}$

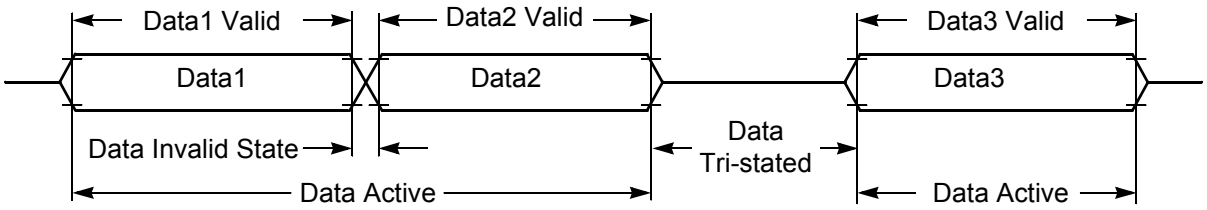


**Figure 10-3 Signal States**

## 10.4 Flash Memory Characteristics

**Table 10-12 Flash Timing Parameters**

| Characteristic | Symbol | Min | Typ | Max | Unit |
|---|---|---|---|---|---|
| Program time[1] | Tprog | 20 | — | — | µs |
| Erase time[2] | Terase | 20 | — | — | ms |
| Mass erase time | Tme | 100 | — | — | ms |

1. There is additional overhead which is part of the programming sequence. See the **56F8300 Peripheral User Manual** for details. Program time is per 16-bit word in Flash memory. Two words at a time can be programmed within the Program Flash module, as it contains two interleaved memories.

2. Specifies page erase time. There are 512 bytes per page in the Data and Boot Flash memories. The Program Flash module uses two interleaved Flash memories, increasing the effective page size to 1024 bytes.

## 10.5 External Clock Operation Timing

**Table 10-13 External Clock Operation Timing Requirements[1]**

| Characteristic | Symbol | Min | Typ | Max | Unit |
|---|---|---|---|---|---|
| Frequency of operation (external clock driver)[2] | $f_{osc}$ | 0 | — | 120 | MHz |
| Clock Pulse Width[3] | $t_{PW}$ | 3.0 | — | — | ns |
| External clock input rise time[4] | $t_{rise}$ | — | — | 10 | ns |
| External clock input fall time[5] | $t_{fall}$ | — | — | 10 | ns |

1. Parameters listed are guaranteed by design.
2. See **Figure 10-4** for details on using the recommended connection of an external clock driver.
3. The high or low pulse width must be no smaller than 8.0ns or the chip will not function.
4. External clock input rise time is measured from 10% to 90%.
5. External clock input fall time is measured from 90% to 10%.

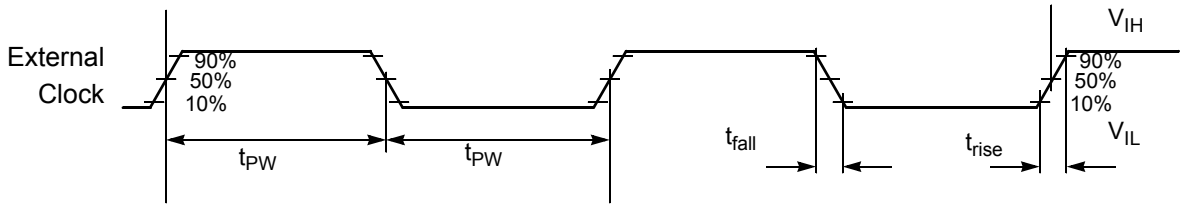


Note: The midpoint is $V_{IL} + (V_{IH} – V_{IL})/2$.

**Figure 10-4 External Clock Timing**

## 10.6 Phase Locked Loop Timing

**Table 10-14 PLL Timing**

| Characteristic | Symbol | Min | Typ | Max | Unit |
|---|---|---|---|---|---|
| External reference crystal frequency for the PLL[1] | $f_{osc}$ | 4 | 8 | 8.4 | MHz |
| PLL output frequency[2] ($f_{OUT}$) | $f_{op}$ | 160 | — | 260 | MHz |
| PLL stabilization time[3] -40° to +125°C | $t_{plls}$ | — | 1 | 10 | ms |

1. An externally supplied reference clock should be as free as possible from any phase jitter for the PLL to work correctly. The PLL is optimized for 8MHz input crystal.
2. ZCLK may not exceed 60MHz. For additional information on ZCLK and ($f_{OUT}/2$), please refer to the OCCS chapter in the **56F8300 Peripheral User Manual**.
3. This is the minimum time required after the PLL set up is changed to ensure reliable operation.

## 10.7 Crystal Oscillator Timing

**Table 10-15 Crystal Oscillator Parameters**

| Characteristic | Symbol | Min | Typ | Max | Unit |
|---|---|---|---|---|---|
| Crystal Start-up time | $T_{CS}$ | 4 | 5 | 10 | ms |
| Resonator Start-up time | $T_{RS}$ | 0.1 | 0.18 | 1 | ms |
| Crystal ESR | $R_{ESR}$ | — | — | 120 | ohms |
| Crystal Peak-to-Peak Jitter | $T_D$ | 70 | — | 250 | ps |
| Crystal Min-Max Period Variation | $T_{PV}$ | 0.12 | — | 1.5 | ns |
| Resonator Peak-to-Peak Jitter | $T_{RJ}$ | — | — | 300 | ps |
| Resonator Min-Max Period Variation | $T_{RP}$ | — | — | 300 | ps |
| Bias Current, high-drive mode | $I_{BIASH}$ | — | 250 | 290 | µA |
| Bias Current, low-drive mode | $I_{BIASL}$ | — | 80 | 110 | µA |
| Quiescent Current, power-down mode | $I_{PD}$ | — | 0 | 1 | µA |

## 10.8 Reset, Stop, Wait, Mode Select, and Interrupt Timing

**Table 10-16 Reset, Stop, Wait, Mode Select, and Interrupt Timing[1,2]**

| Characteristic | Symbol | Typical Min | Typical Max | Unit | See Figure |
|---|---|---|---|---|---|
| Minimum $\overline{RESET}$ Assertion Duration | $t_{RA}$ | 16T | — | ns | 10-5 |
| Edge-sensitive Interrupt Request Width | $t_{IRW}$ | 1.5T | — | ns | 10-6 |
| $\overline{IRQA}$, $\overline{IRQB}$ Assertion to General Purpose Output Valid, caused by first instruction execution in the interrupt service routine | $t_{IG}$ | 18T | — | ns | 10-7 |
| | $t_{IG}$ - FAST | 14T | — | | |

## Table 10-16 Reset, Stop, Wait, Mode Select, and Interrupt Timing[1,2]

| Characteristic | Symbol | Typical Min | Typical Max | Unit | See Figure |
|---|---|---|---|---|---|
| $\overline{\text{IRQA}}$ Width Assertion to Recover from Stop State[3] | $t_{IW}$ | 1.5T | — | ns | 10-9 |

1. In the formulas, T = clock cycle. For an operating frequency of 60MHz, T = 16.67ns. At 8MHz (used during Reset and Stop modes), T = 125ns.
2. Parameters listed are guaranteed by design.
3. The interrupt instruction fetch is visible on the pins only in Mode 3.

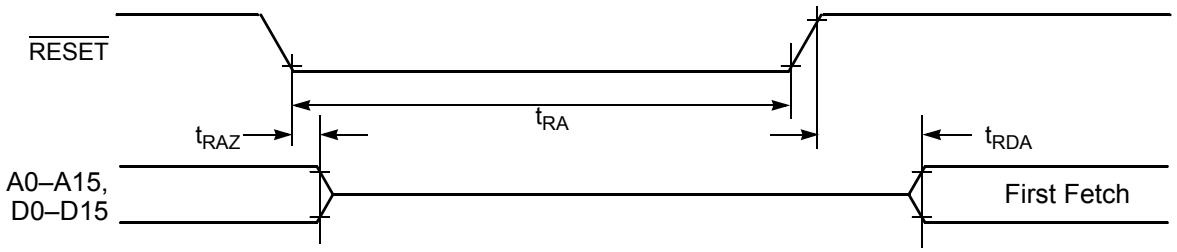


**Figure 10-5 Asynchronous Reset Timing**

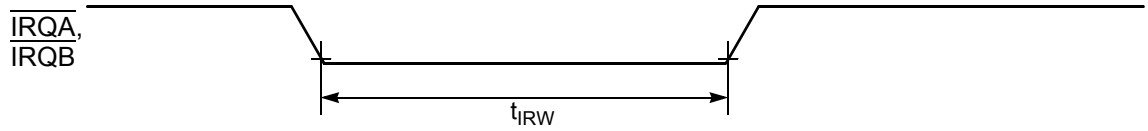


**Figure 10-6 External Interrupt Timing (Negative Edge-Sensitive)**

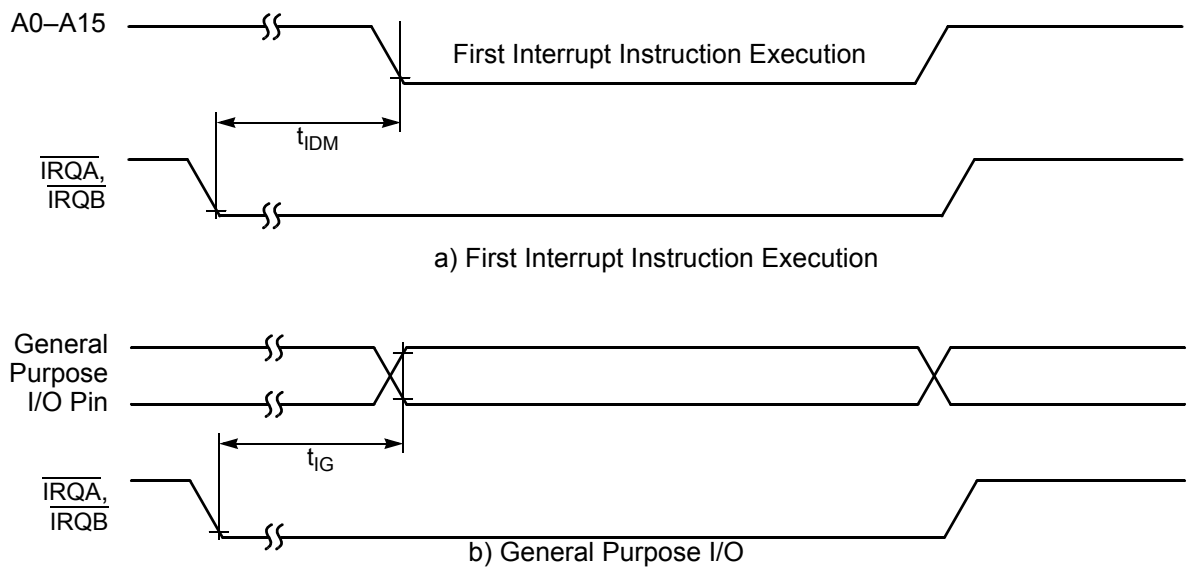


**Figure 10-7 External Level-Sensitive Interrupt Timing**

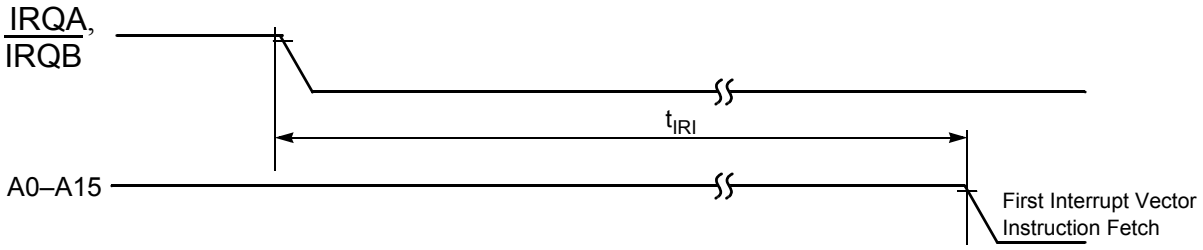


**Figure 10-8 Interrupt from Wait State Timing**

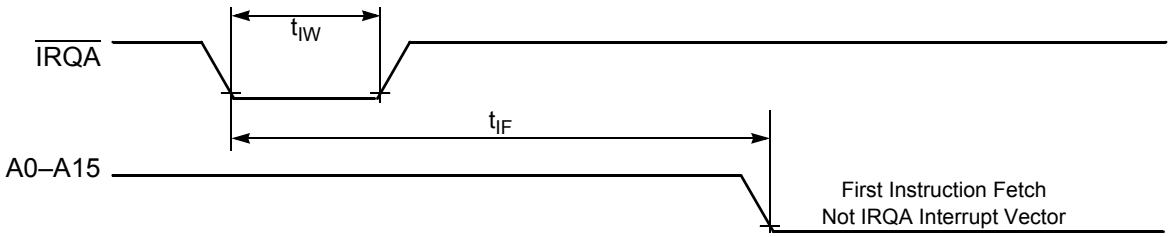


**Figure 10-9 Recovery from Stop State Using Asynchronous Interrupt Timing**

## 10.9 Serial Peripheral Interface (SPI) Timing

**Table 10-17 SPI Timing[1]**

| Characteristic | Symbol | Min | Max | Unit | See Figure |
|---|---|---|---|---|---|
| Cycle time<br>Master<br>Slave | $t_C$ | <br>50<br>50 | <br>—<br>— | <br>ns<br>ns | 10-10, 10-11, 10-12, 10-13 |
| Enable lead time<br>Master<br>Slave | $t_{ELD}$ | <br>—<br>25 | <br>—<br>— | <br>ns<br>ns | 10-13 |
| Enable lag time<br>Master<br>Slave | $t_{ELG}$ | <br>—<br>100 | <br>—<br>— | <br>ns<br>ns | 10-13 |
| Clock (SCK) high time<br>Master<br>Slave | $t_{CH}$ | <br>17.6<br>25 | <br>—<br>— | <br>ns<br>ns | 10-10, 10-11, 10-12, 10-13 |
| Clock (SCK) low time<br>Master<br>Slave | $t_{CL}$ | <br>24.1<br>25 | <br>—<br>— | <br>ns<br>ns | 10-13 |
| Data set up time required for inputs<br>Master<br>Slave | $t_{DS}$ | <br>20<br>0 | <br>—<br>— | <br>ns<br>ns | 10-10, 10-11, 10-12, 10-13 |
| Data hold time required for inputs<br>Master<br>Slave | $t_{DH}$ | <br>0<br>2 | <br>—<br>— | <br>ns<br>ns | 10-10, 10-11, 10-12, 10-13 |
| Access time (time to data active from high-impedance state)<br>Slave | $t_A$ | <br>4.8 | <br>15 | <br>ns | 10-13 |
| Disable time (hold time to high-impedance state)<br>Slave | $t_D$ | <br>3.7 | <br>15.2 | <br>ns | 10-13 |
| Data Valid for outputs<br>Master<br>Slave (after enable edge) | $t_{DV}$ | <br>—<br>— | <br>4.5<br>20.4 | <br>ns<br>ns | 10-10, 10-11, 10-12, 10-13 |
| Data invalid<br>Master<br>Slave | $t_{DI}$ | <br>0<br>0 | <br>—<br>— | <br>ns<br>ns | 10-10, 10-11, 10-12 |
| Rise time<br>Master<br>Slave | $t_R$ | <br>—<br>— | <br>11.5<br>10.0 | <br>ns<br>ns | 10-10, 10-11, 10-12, 10-13 |
| Fall time<br>Master<br>Slave | $t_F$ | <br>—<br>— | <br>9.7<br>9.0 | <br>ns<br>ns | 10-10, 10-11, 10-12, 10-13 |

1. Parameters listed are guaranteed by design.

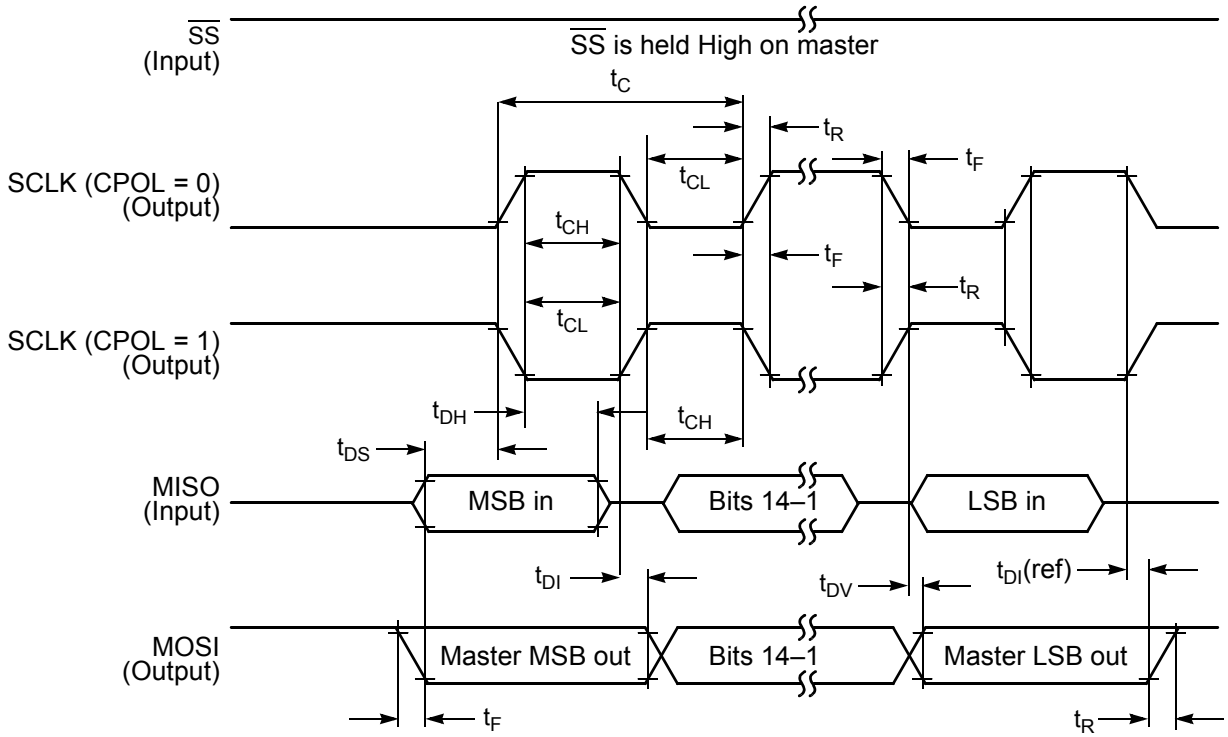


**Figure 10-10 SPI Master Timing (CPHA = 0)**

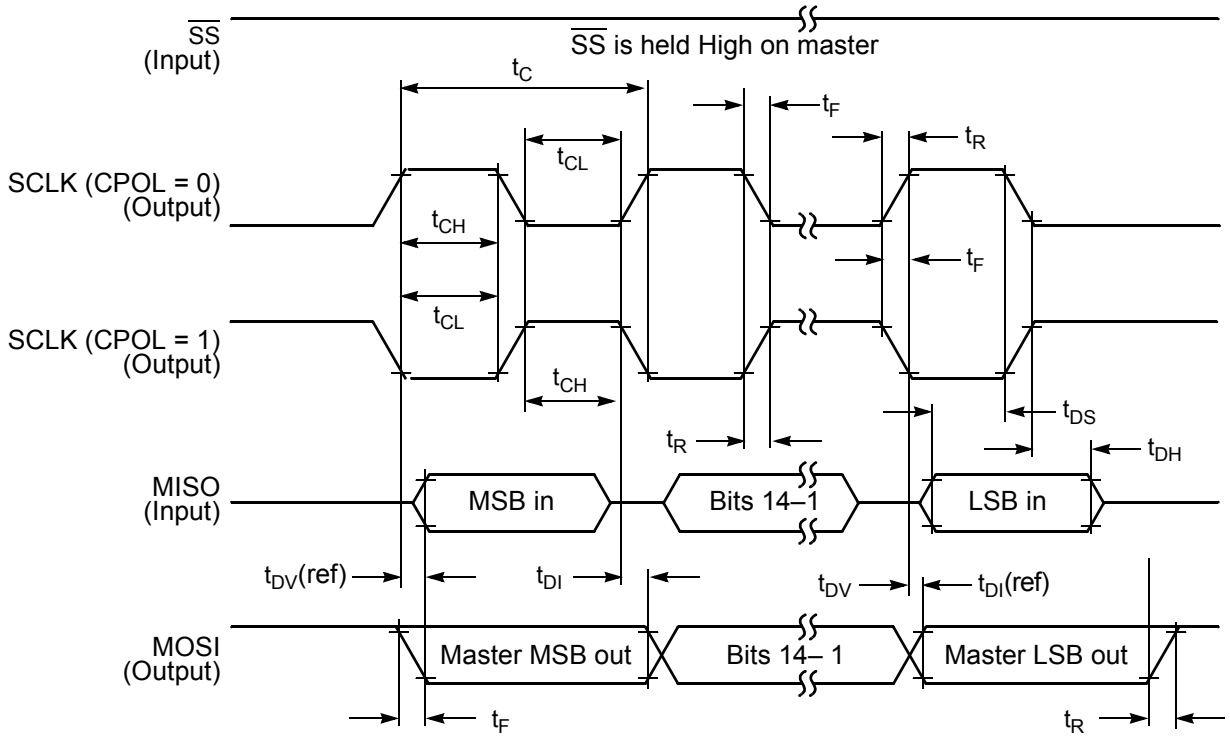


**Figure 10-11 SPI Master Timing (CPHA = 1)**

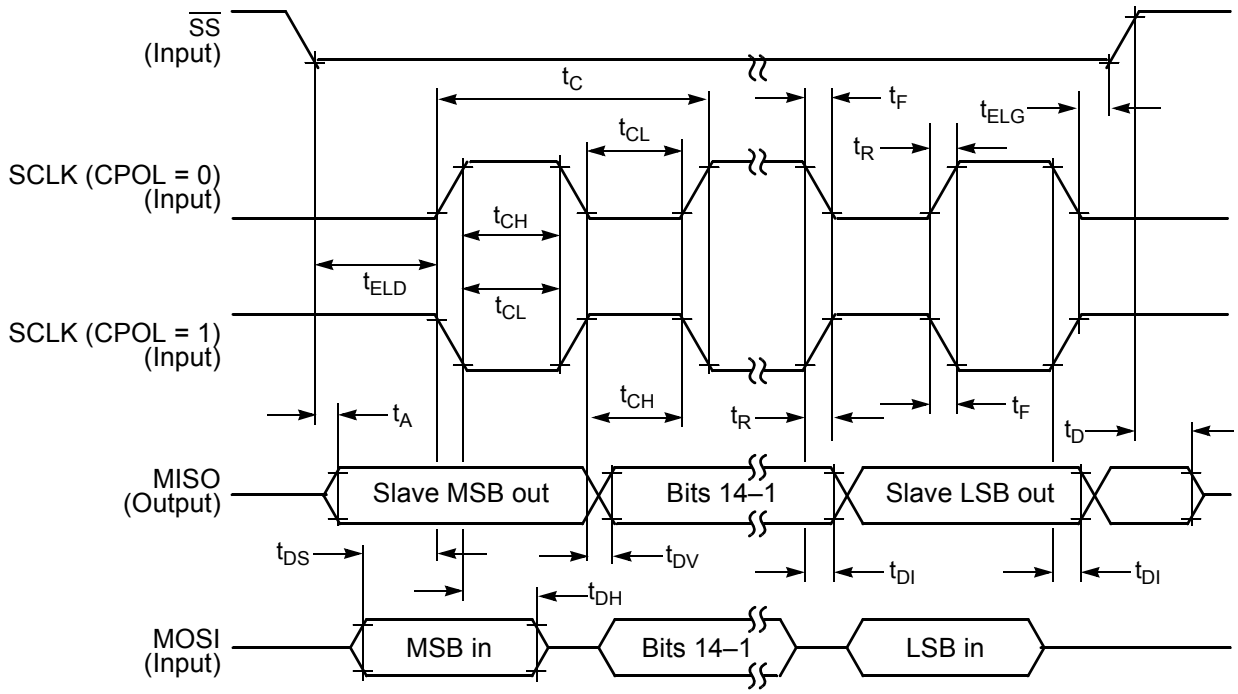


**Figure 10-12 SPI Slave Timing (CPHA = 0)**

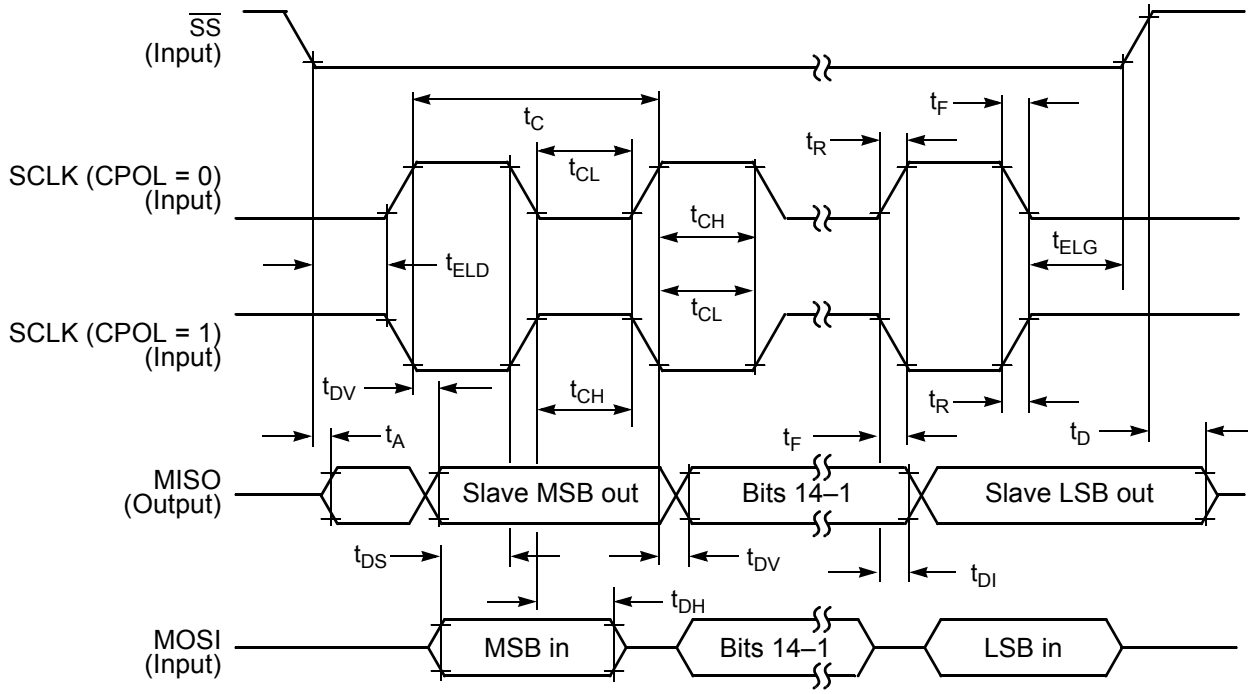


**Figure 10-13 SPI Slave Timing (CPHA = 1)**

## 10.10 Quad Timer Timing

**Table 10-18 Timer Timing[1, 2]**

| Characteristic | Symbol | Min | Max | Unit | See Figure |
|---|---|---|---|---|---|
| Timer input period | $P_{IN}$ | 2T + 6 | — | ns | 10-14 |
| Timer input high / low period | $P_{INHL}$ | 1T + 3 | — | ns | 10-14 |
| Timer output period | $P_{OUT}$ | 1T - 3 | — | ns | 10-14 |
| Timer output high / low period | $P_{OUTHL}$ | 0.5T - 3 | — | ns | 10-14 |

1. In the formulas listed, T = the clock cycle. For 60MHz operation, T = 16.67ns.
2. Parameters listed are guaranteed by design.

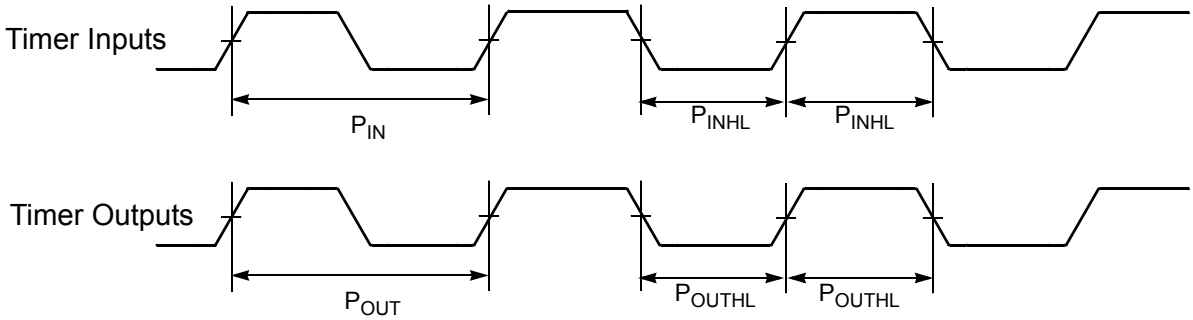


**Figure 10-14 Timer Timing**

## 10.11 Quadrature Decoder Timing

**Table 10-19 Quadrature Decoder Timing[1, 2]**

| Characteristic | Symbol | Min | Max | Unit | See Figure |
|---|---|---|---|---|---|
| Quadrature input period | $P_{IN}$ | 4T + 12 | — | ns | 10-15 |
| Quadrature input high / low period | $P_{HL}$ | 2T + 6 | — | ns | 10-15 |
| Quadrature phase period | $P_{PH}$ | 1T + 3 | — | ns | 10-15 |

1. In the formulas listed, T = the clock cycle. For 60MHz operation, T=16.67ns.
2. Parameters listed are guaranteed by design.

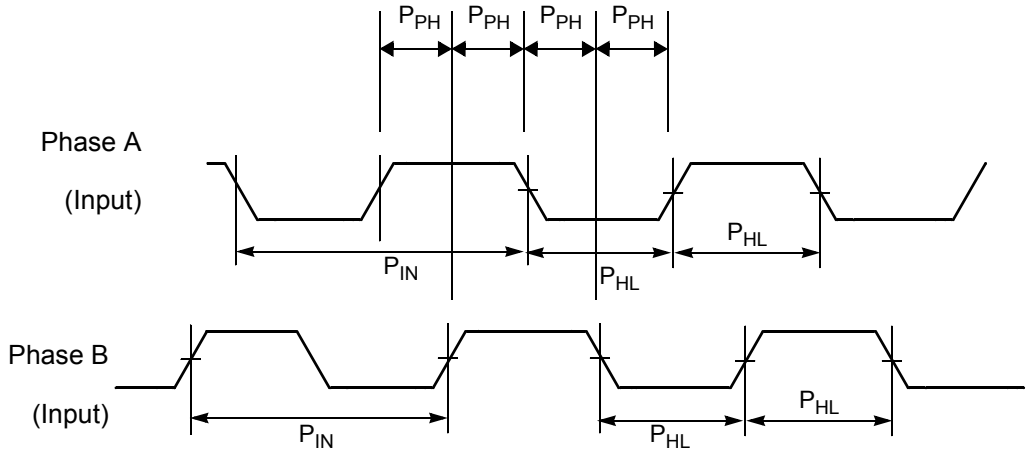


**Figure 10-15 Quadrature Decoder Timing**

## 10.12 Serial Communication Interface (SCI) Timing

**Table 10-20 SCI Timing[1]**

| Characteristic | Symbol | Min | Max | Unit | See Figure |
|---|---|---|---|---|---|
| Baud Rate[2] | BR | — | ($f_{MAX}$/16) | Mbps | — |
| RXD[3] Pulse Width | $RXD_{PW}$ | 0.965/BR | 1.04/BR | ns | **10-16** |
| TXD[4] Pulse Width | $TXD_{PW}$ | 0.965/BR | 1.04/BR | ns | **10-17** |

1. Parameters listed are guaranteed by design.
2. $f_{MAX}$ is the frequency of operation of the system clock, ZCLK, in MHz, which is 60MHz for the 56F8365 device and 40MHz for the 56F8165 device.
3. The RXD pin in SCI0 is named RXD0 and the RXD pin in SCI1 is named RXD1.
4. The TXD pin in SCI0 is named TXD0 and the TXD pin in SCI1 is named TXD1.

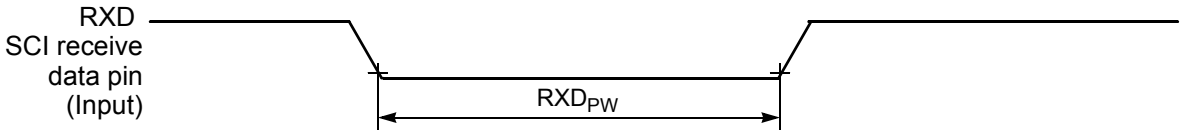


**Figure 10-16 RXD Pulse Width**

**Figure 10-17 TXD Pulse Width**

## 10.13 Controller Area Network (CAN) Timing

**Note:** *CAN is NOT available in the 56F8165 device.*

**Table 10-21 CAN Timing[1]**

| Characteristic | Symbol | Min | Max | Unit | See Figure |
|---|---|---|---|---|---|
| Baud Rate | $BR_{CAN}$ | — | 1 | Mbps | — |
| Bus Wake Up detection | $T_{WAKEUP}$ | 5 | — | µs | 10-18 |

1. Parameters listed are guaranteed by design

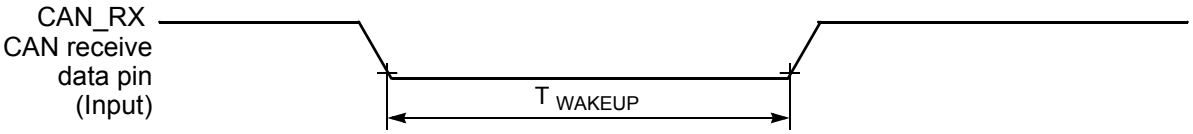


**Figure 10-18 Bus Wake Up Detection**

## 10.14 JTAG Timing

**Table 10-22 JTAG Timing**

| Characteristic | Symbol | Min | Max | Unit | See Figure |
|---|---|---|---|---|---|
| TCK frequency of operation using EOnCE[1] | $f_{OP}$ | DC | SYS_CLK/8 | MHz | 10-19 |
| TCK frequency of operation not using EOnCE[1] | $f_{OP}$ | DC | SYS_CLK/4 | MHz | 10-19 |
| TCK clock pulse width | $t_{PW}$ | 50 | — | ns | 10-19 |
| TMS, TDI data set-up time | $t_{DS}$ | 5 | — | ns | 10-20 |
| TMS, TDI data hold time | $t_{DH}$ | 5 | — | ns | 10-20 |
| TCK low to TDO data valid | $t_{DV}$ | — | 30 | ns | 10-20 |

## Table 10-22 JTAG Timing

| Characteristic | Symbol | Min | Max | Unit | See Figure |
|---|---|---|---|---|---|
| TCK low to TDO tri-state | $t_{TS}$ | — | 30 | ns | 10-20 |
| $\overline{TRST}$ assertion time | $t_{TRST}$ | $2T^2$ | — | ns | 10-21 |

1. TCK frequency of operation must be less than 1/8 the processor rate.
2. T = processor clock period (nominally 1/60MHz)

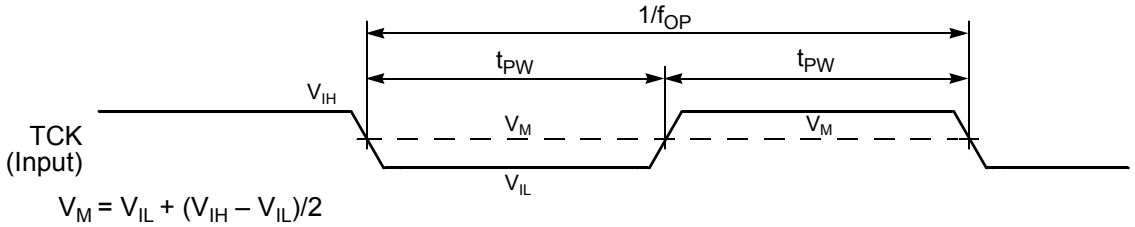


**Figure 10-19 Test Clock Input Timing Diagram**

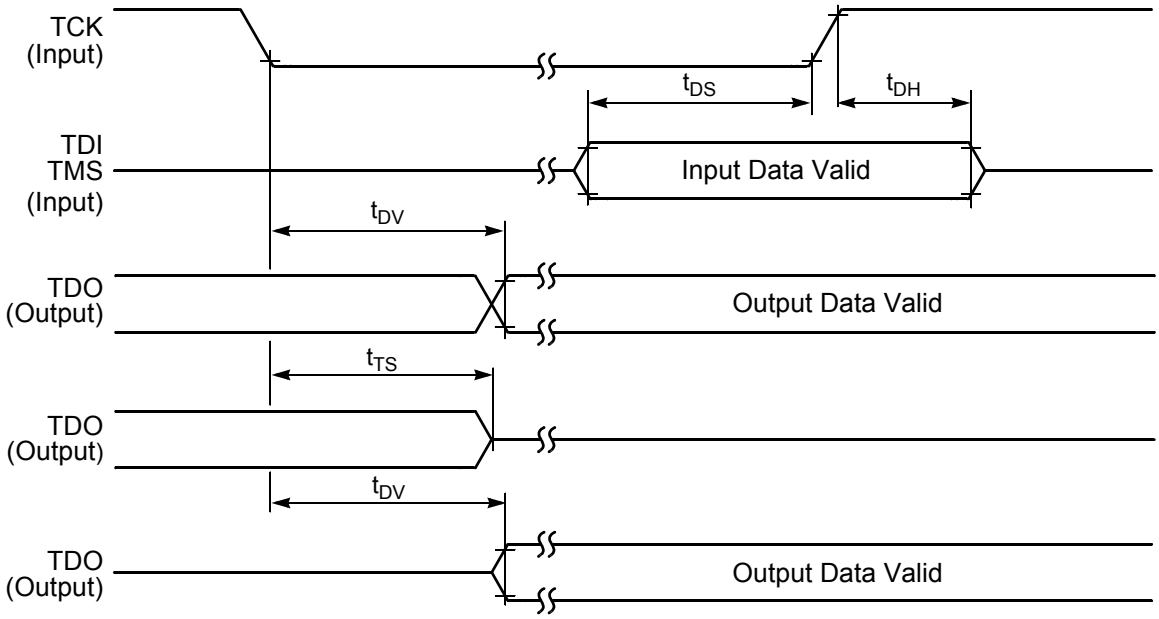


**Figure 10-20 Test Access Port Timing Diagram**

**Figure 10-21 TRST Timing Diagram**

## 10.15 Analog-to-Digital Converter (ADC) Parameters

**Table 10-23 ADC Parameters**

| Characteristic | Symbol | Min | Typ | Max | Unit |
|---|---|---|---|---|---|
| Input voltages | $V_{ADIN}$ | $V_{REFL}$ | — | $V_{REFH}$ | V |
| Resolution | $R_{ES}$ | 12 | — | 12 | Bits |
| Integral Non-Linearity[1] | INL | — | +/- 2.4 | +/- 3.2 | LSB[2] |
| Differential Non-Linearity | DNL | — | +/- 0.7 | < +1 | LSB[2] |
| Monotonicity | GUARANTEED | | | | |
| ADC internal clock | $f_{ADIC}$ | 0.5 | — | 5 | MHz |
| Conversion range | $R_{AD}$ | $V_{REFL}$ | — | $V_{REFH}$ | V |
| ADC channel power-up time | $t_{ADPU}$ | 5 | 6 | 16 | $t_{AIC}$ cycles[3] |
| ADC reference circuit power-up time[4] | $t_{VREF}$ | — | — | 25 | ms |
| Conversion time | $t_{ADC}$ | — | 6 | — | $t_{AIC}$ cycles[3] |
| Sample time | $t_{ADS}$ | — | 1 | — | $t_{AIC}$ cycles[3] |
| Input capacitance | $C_{ADI}$ | — | 5 | — | pF |
| Input injection current[5], per pin | $I_{ADI}$ | — | — | 3 | mA |
| Input injection current, total | $I_{ADIT}$ | — | — | 20 | mA |
| $V_{REFH}$ current | $I_{VREFH}$ | — | 1.2 | 3 | mA |
| ADC A current | $I_{ADCA}$ | — | 25 | — | mA |
| ADC B current | $I_{ADCB}$ | — | 25 | — | mA |
| Quiescent current | $I_{ADCQ}$ | — | 0 | 10 | μA |
| Uncalibrated Gain Error (ideal = 1) | $E_{GAIN}$ | — | +/- .004 | +/- .01 | — |

## Table 10-23 ADC Parameters (Continued)

| Characteristic | Symbol | Min | Typ | Max | Unit |
|---|---|---|---|---|---|
| Uncalibrated Offset Voltage | $V_{OFFSET}$ | — | +/- 27 | +/- 40 | mV |
| Calibrated Absolute Error[6] | $AE_{CAL}$ | — | See **Figure 10-22** | — | LSBs |
| Calibration Factor 1[7] | CF1 | — | — | 0.002289 | — |
| Calibration Factor 2[7] | CF2 | — | — | –25.6 | — |
| Crosstalk between channels | — | — | –60 | — | dB |
| Common Mode Voltage | $V_{common}$ | — | $(V_{REFH} - V_{REFLO}) / 2$ | — | V |
| Signal-to-noise ratio | SNR | — | 64.6 | — | db |
| Signal-to-noise plus distortion ratio | SINAD | — | 59.1 | — | db |
| Total Harmonic Distortion | THD | — | 60.6 | — | db |
| Spurious Free Dynamic Range | SFDR | — | 61.1 | — | db |
| Effective Number Of Bits[8] | ENOB | — | 9.6 | — | Bits |
| Non-averaged DC drift of error over temperature from 27° C[9] | — | — | — | 3 | LSB |

1. INL measured from $V_{in} = .1V_{REFH}$ to $V_{in} = .9V_{REFH}$ 10% to 90% Input Signal Range
2. LSB = Least Significant Bit
3. ADC clock cycles
4. Assumes each voltage reference pin is bypassed with 0.1μF ceramic capacitors to ground
5. The current that can be injected or sourced from an unselected ADC signal input without impacting the performance of the ADC. This allows the ADC to operate in noisy industrial environments where inductive flyback is possible.
6. Absolute error includes the effects of both gain error and offset error.
7. Please see the **56F8300Peripheral User's Manual** for additional information on ADC calibration.
8. ENOB = (SINAD - 1.76)/6.02
9. Temperature range –40° C to 150° C

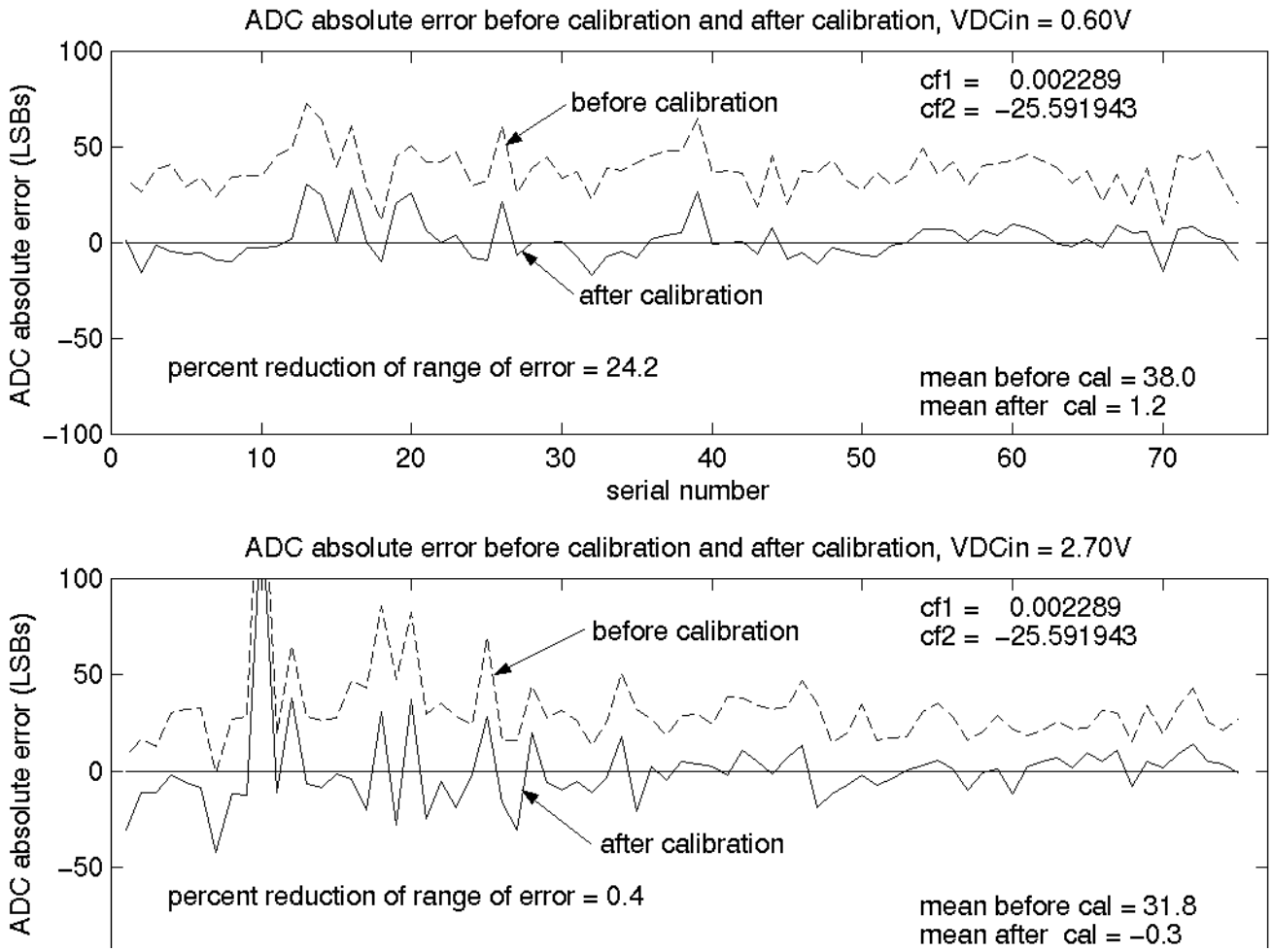


**Figure 10-22 ADC Absolute Error Over Processing and Temperature Extremes Before and After Calibration for $VDC_{in}$ = 0.60V and 2.70V**

**Note:** The absolute error data shown in the graphs above reflects the effects of both gain error and offset error. The data was taken on 25 parts: five each from four processing corner lots as well as five from one nominally processed lot, each at three temperatures: -40°C, 27°C, and 150°C (giving the 75 data points shown above), for two input DC voltages: 0.60V and 2.70V. The data indicates that for the given population of parts, calibration significantly reduced (by as much as 24%) the collective variation (spread) of the absolute error of the population. It also significantly reduced (by as much as 38%) the mean (average) of the absolute error and thereby brought it significantly closer to the ideal value of zero. Although not guaranteed, it is believed that calibration will produce results similar to those shown above for any population of parts including those which represent processing and temperature extremes.

## 10.16 Equivalent Circuit for ADC Inputs

**Figure 10-23** illustrates the ADC input circuit during sample and hold. S1 and S2 are always open/closed

at the same time that S3 is closed/open. When S1/S2 are closed & S3 is open, one input of the sample and hold circuit moves to $V_{REFH}$ - $V_{REFH}$ / 2, while the other charges to the analog input voltage. When the switches are flipped, the charge on C1 and C2 are averaged via S3, with the result that a single-ended analog input is switched to a differential voltage centered about $V_{REFH}$ - $V_{REFH}$ / 2. The switches switch on every cycle of the ADC clock (open one-half ADC clock, closed one-half ADC clock). Note that there are additional capacitances associated with the analog input pad, routing, etc., but these do not filter into the S/H output voltage, as S1 provides isolation during the charge-sharing phase.

One aspect of this circuit is that there is an on-going input current, which is a function of the analog input voltage, $V_{REF}$ and the ADC clock frequency.

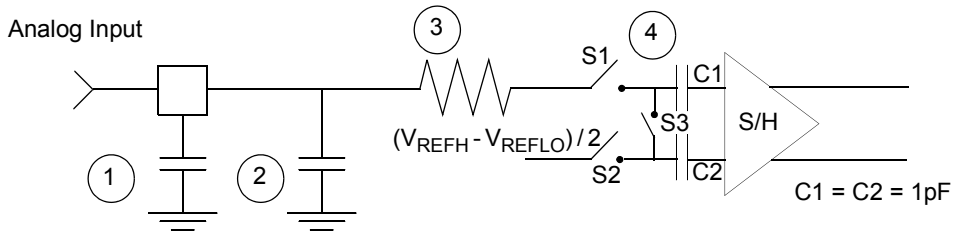


1. Parasitic capacitance due to package, pin-to-pin and pin-to-package base coupling; 1.8pf
2. Parasitic capacitance due to the chip bond pad, ESD protection devices and signal routing; 2.04pf
3. Equivalent resistance for the ESD isolation resistor and the channel select mux; 500 ohms
4. Sampling capacitor at the sample and hold circuit. Capacitor C1 is normally disconnected from the input and is only connected to it at sampling time; 1pf

**Figure 10-23 Equivalent Circuit for A/D Loading**

## 10.17 Power Consumption

This section provides additional detail which can be used to optimize power consumption for a given application.

Power consumption is given by the following equation:

Total power = A: internal [static component]
+B: internal [state-dependent component]
+C: internal [dynamic component]
+D: external [dynamic component]
+E: external [static]

A, the internal [static component], is comprised of the DC bias currents for the oscillator, leakage current, PLL, and voltage references. These sources operate independently of processor state or operating frequency.

B, the internal [state-dependent component], reflects the supply current required by certain on-chip resources only when those resources are in use. These include RAM, Flash memory and the ADCs.

C, the internal [dynamic component], is classic $C*V^2*F$ CMOS power dissipation corresponding to the 56800E core and standard cell logic.

D, the external [dynamic component], reflects power dissipated on-chip as a result of capacitive loading on the external pins of the chip. This is also commonly described as $C*V^2*F$, although simulations on two of the IO cell types used on the device reveal that the power-versus-load curve does have a non-zero Y-intercept.

**Table 10-24 IO Loading Coefficients at 10MHz**

| | Intercept | Slope |
|---|---|---|
| PDU08DGZ_ME | 1.3 | 0.11mW / pF |
| PDU04DGZ_ME | 1.15mW | 0.11mW / pF |

Power due to capacitive loading on output pins is (first order) a function of the capacitive load and frequency at which the outputs change. **Table 10-24** provides coefficients for calculating power dissipated in the IO cells as a function of capacitive load. In these cases:

*Total Power* = Σ((Intercept +Slope*Cload)*frequency/10MHz)

where:

- Summation is performed over all output pins with capacitive loads
- Total Power is expressed in mW
- Cload is expressed in pF

Because of the low duty cycle on most device pins, power dissipation due to capacitive loads was found to be fairly low when averaged over a period of time.

E, the external [static component], reflects the effects of placing resistive loads on the outputs of the device. Sum the total of all $V^2/R$ or IV to arrive at the resistive load contribution to power. Assume V = 0.5 for the purposes of these rough calculations. For instance, if there is a total of eight PWM outputs driving 10mA into LEDs, then P = 8*.5*.01 = 40mW.

In previous discussions, power consumption due to parasitics associated with pure input pins is ignored, as it is assumed to be negligible.

# Part 11 Packaging

## 11.1 56F8365 Package and Pin-Out Information

This section contains package and pin-out information for the 56F8365. This device comes in a 128-pin Low-profile Quad Flat Pack (LQFP). **Figure 11-1**. shows the package outline for the 128-pin LQFP; **Figure 11-3** shows the mechanical parameters for this package, and **Table 11-1**. lists the pin-out for the 128-pin LQFP.

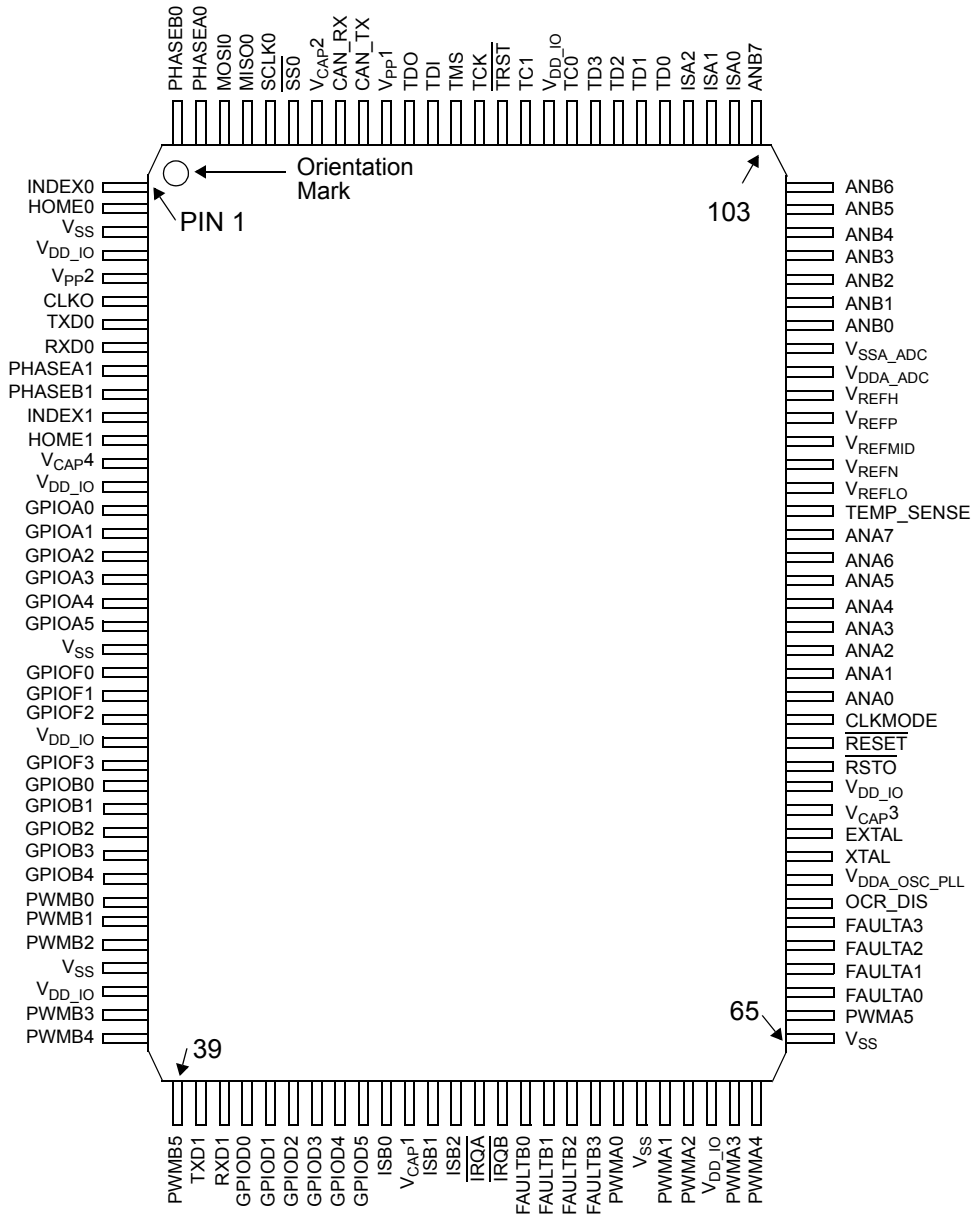


**Figure 11-1 Top View, 56F8365 128-pin LQFP Package**

**Table 11-1 56F8365 128-Pin LQFP Package Identification by Pin Number**

| Pin No. | Signal Name | Pin No. | Signal Name | Pin No. | Signal Name | Pin No. | Signal Name |
|---|---|---|---|---|---|---|---|
| 1 | INDEX0 | 33 | PWMB1 | 65 | $V_{SS}$ | 97 | ANB1 |
| 2 | HOME0 | 34 | PWMB2 | 66 | PWMA5 | 98 | ANB2 |

## Table 11-1 56F8365 128-Pin LQFP Package Identification by Pin Number (Continued)

| Pin No. | Signal Name | Pin No. | Signal Name | Pin No. | Signal Name | Pin No. | Signal Name |
|---|---|---|---|---|---|---|---|
| 3 | $V_{SS}$ | 35 | $V_{SS}$ | 67 | FAULTA0 | 99 | ANB3 |
| 4 | $V_{DD_IO}$ | 36 | $V_{DD_IO}$ | 68 | FAULTA1 | 100 | ANB4 |
| 5 | $V_{PP}2$ | 37 | PWMB3 | 69 | FAULTA2 | 101 | ANB5 |
| 6 | CLKO | 38 | PWMB4 | 70 | FAULTA3 | 102 | ANB6 |
| 7 | TXD0 | 39 | PWMB5 | 71 | OCR_DIS | 103 | ANB7 |
| 8 | RXD0 | 40 | TXD1 | 72 | $V_{DDA_OSC_PLL}$ | 104 | ISA0 |
| 9 | PHASEA1 | 41 | RXD1 | 73 | XTAL | 105 | ISA1 |
| 10 | PHASEB1 | 42 | GPIOD0 | 74 | EXTAL | 106 | ISA2 |
| 11 | INDEX1 | 43 | GPIOD1 | 75 | $V_{CAP}3$ | 107 | TD0 |
| 12 | HOME1 | 44 | GPIOD2 | 76 | $V_{DD_IO}$ | 108 | TD1 |
| 13 | $V_{CAP}4$ | 45 | GPIOD3 | 77 | $\overline{RSTO}$ | 109 | TD2 |
| 14 | $V_{DD_IO}$ | 46 | GPIOD4 | 78 | $\overline{RESET}$ | 110 | TD3 |
| 15 | GPIOA0[1] | 47 | GPIOD5 | 79 | CLKMODE | 111 | TC0 |
| 16 | GPIOA1[1] | 48 | ISB0 | 80 | ANA0 | 112 | $V_{DD_IO}$ |
| 17 | GPIOA2[1] | 49 | $V_{CAP}1$ | 81 | ANA1 | 113 | TC1 |
| 18 | GPIOA3[1] | 50 | ISB1 | 82 | ANA2 | 114 | $\overline{TRST}$ |
| 19 | GPIOA4[1] | 51 | ISB2 | 83 | ANA3 | 115 | TCK |
| 20 | GPIOA5[1] | 52 | $\overline{IRQA}$ | 84 | ANA4 | 116 | TMS |
| 21 | $V_{SS}$ | 53 | $\overline{IRQB}$ | 85 | AN5 | 117 | TDI |
| 20 | GPIOF0[1] | 54 | FAULTB0 | 86 | ANA6 | 118 | TDO |
| 23 | GPIOF1[1] | 55 | FAULTB1 | 87 | ANA7 | 119 | $V_{PP}1$ |
| 24 | GPIOF2[1] | 56 | FAULTB2 | 88 | TEMP_SENSE | 120 | CAN_TX |
| 25 | $V_{DD_IO}$ | 57 | FAULTB3 | 89 | $V_{REFLO}$ | 121 | CAN_RX |
| 1. Primary function is not available in this package configuration; GPIO function must be used instead | | | | | | | |
| 26 | GPIOF3[1] | 58 | PWMA0 | 90 | $V_{REFN}$ | 122 | $V_{CAP}2$ |
| 27 | GPIOB0 | 59 | $V_{SS}$ | 91 | $V_{REFMID}$ | 123 | $\overline{SS0}$ |
| 28 | GPIOB1 | 60 | PWMA1 | 92 | $V_{REFP}$ | 124 | SCLK0 |

**Table 11-1 56F8365 128-Pin LQFP Package Identification by Pin Number (Continued)**

| Pin No. | Signal Name | Pin No. | Signal Name | Pin No. | Signal Name | Pin No. | Signal Name |
|---|---|---|---|---|---|---|---|
| 29 | GPIOB2 | 61 | PWMA2 | 93 | $V_{REFH}$ | 125 | MISO0 |
| 30 | GPIOB3 | 62 | $V_{DD_IO}$ | 94 | $V_{DDA_ADC}$ | 126 | MOSI0 |
| 31 | GPIOB4 | 63 | PWMA3 | 95 | $V_{SSA_ADC}$ | 127 | PHASEA0 |
| 32 | PWMB0 | 64 | PWMA4 | 96 | ANB0 | 128 | PHASEB0 |

## 11.2 56F8165 Package and Pin-Out Information

This section contains package and pin-out information for the 56F8165. This device comes in a 128-pin Low-profile Quad Flat Pack (LQFP). **Figure 11-1**. shows the package outline for the 128-pin LQFP, **Figure 11-3** shows the mechanical parameters for this package, and **Table 11-1** lists the pin-out for the 128-pin LQFP.

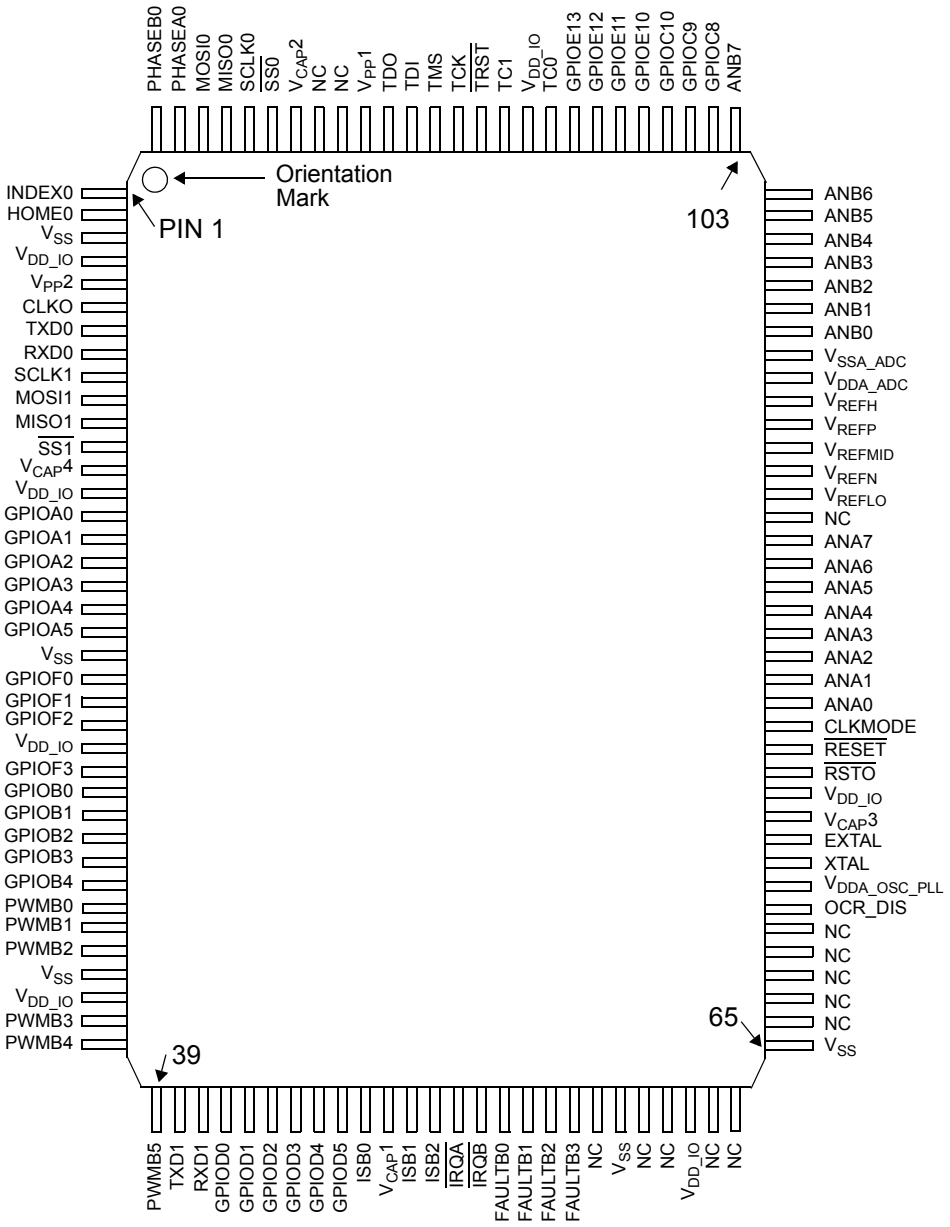


**Figure 11-2 Top View, 56F8165 128-pin LQFP Package**

**Table 11-2 56F8165 128-Pin LQFP Package Identification by Pin Number**

| Pin No. | Signal Name | Pin No. | Signal Name | Pin No. | Signal Name | Pin No. | Signal Name |
|---|---|---|---|---|---|---|---|
| 1 | INDEX0 | 33 | PWMB1 | 65 | $V_{SS}$ | 97 | ANB1 |

## Table 11-2 56F8165 128-Pin LQFP Package Identification by Pin Number (Continued)

| Pin No. | Signal Name | Pin No. | Signal Name | Pin No. | Signal Name | Pin No. | Signal Name |
|---|---|---|---|---|---|---|---|
| 2 | HOME0 | 34 | PWMB2 | 66 | NC | 98 | ANB2 |
| 3 | $V_{SS}$ | 35 | $V_{SS}$ | 67 | NC | 99 | ANB3 |
| 4 | $V_{DD_IO}$ | 36 | $V_{DD_IO}$ | 68 | NC | 100 | ANB4 |
| 5 | $V_{PP}2$ | 37 | PWMB3 | 69 | NC | 101 | ANB5 |
| 6 | CLKO | 38 | PWMB4 | 70 | NC | 102 | ANB6 |
| 7 | TXD0 | 39 | PWMB5 | 71 | OCR_DIS | 103 | ANB7 |
| 8 | RXD0 | 40 | TXD1 | 72 | $V_{DDA_OSC_PLL}$ | 104 | GPIOC8 |
| 9 | SCLK1 | 41 | RXD1 | 73 | XTAL | 105 | GPIOC9 |
| 10 | MOSI1 | 42 | GPIOD0 | 74 | EXTAL | 106 | GPIOC10 |
| 11 | MISO1 | 43 | GPIOD1 | 75 | $V_{CAP}3$ | 107 | GPIOE10 |
| 12 | $\overline{SS1}$ | 44 | GPIOD2 | 76 | $V_{DD_IO}$ | 108 | GPIOE11 |
| 13 | $V_{CAP}4$ | 45 | GPIOD3 | 77 | $\overline{RSTO}$ | 109 | GPIOE12 |
| 14 | $V_{DD_IO}$ | 46 | GPIOD4 | 78 | $\overline{RESET}$ | 110 | GPIOE13 |
| 15 | GPIOA0[1] | 47 | GPIOD5 | 79 | CLKMODE | 111 | TC0 |
| 16 | GPIOA1[1] | 48 | ISB0 | 80 | ANA0 | 112 | $V_{DD_IO}$ |
| 17 | GPIOA2[1] | 49 | $V_{CAP}1$ | 81 | ANA1 | 113 | TC1 |
| 18 | GPIOA3[1] | 50 | ISB1 | 82 | ANA2 | 114 | $\overline{TRST}$ |
| 19 | GPIOA4[1] | 51 | ISB2 | 83 | ANA3 | 115 | TCK |
| 20 | GPIOA5[1] | 52 | $\overline{IRQA}$ | 84 | ANA4 | 116 | TMS |
| 21 | $V_{SS}$ | 53 | $\overline{IRQB}$ | 85 | AN5 | 117 | TDI |
| 220 | GPIOF0[1] | 54 | FAULTB0 | 86 | ANA6 | 118 | TDO |
| 23 | GPIOF1[1] | 55 | FAULTB1 | 87 | ANA7 | 119 | $V_{PP}1$ |
| 24 | GPIOF2[1] | 56 | FAULTB2 | 88 | NC | 120 | NC |
| 25 | $V_{DD_IO}$ | 57 | FAULTB3 | 89 | $V_{REFLO}$ | 121 | NC |
| 1. Primary function is not available in this package configuration; GPIO function must be used instead | | | | | | | |
| 26 | GPIOF3[1] | 58 | NC | 90 | $V_{REFN}$ | 122 | $V_{CAP}2$ |
| 27 | GPIOB0 | 59 | $V_{SS}$ | 91 | $V_{REFMID}$ | 123 | $\overline{SS0}$ |
| 28 | GPIOB1 | 60 | NC | 92 | $V_{REFP}$ | 124 | SCLK0 |

## Table 11-2 56F8165 128-Pin LQFP Package Identification by Pin Number (Continued)

| Pin No. | Signal Name | Pin No. | Signal Name | Pin No. | Signal Name | Pin No. | Signal Name |
|---|---|---|---|---|---|---|---|
| 29 | GPIOB2 | 61 | NC | 93 | $V_{REFH}$ | 125 | MISO0 |
| 30 | GPIOB3 | 62 | $V_{DD_IO}$ | 94 | $V_{DDA_ADC}$ | 126 | MOSI0 |
| 31 | GPIOB4 | 63 | NC | 95 | $V_{SSA_ADC}$ | 127 | PHASEA0 |
| 32 | PWMB0 | 64 | NC | 96 | ANB0 | 128 | PHASEB0 |

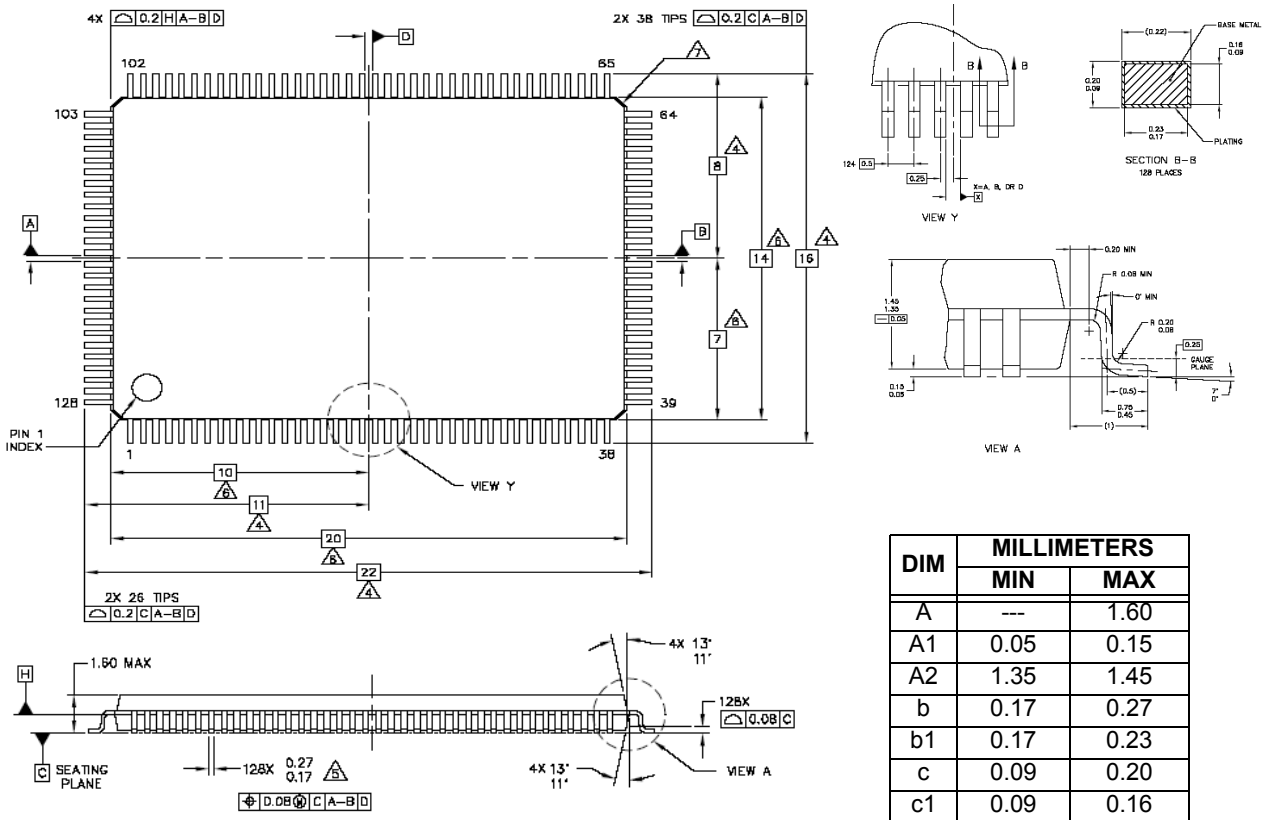


| DIM | MILLIMETERS | |
|---|---|---|
| | MIN | MAX |
| A | --- | 1.60 |
| A1 | 0.05 | 0.15 |
| A2 | 1.35 | 1.45 |
| b | 0.17 | 0.27 |
| b1 | 0.17 | 0.23 |
| c | 0.09 | 0.20 |
| c1 | 0.09 | 0.16 |
| D | 22.00 BSC | |
| D1 | 20.00BSC | |
| e | 0.50 BSC | |
| E | 16.00 BSC | |
| E1 | 14.00 BSC | |
| L | 0.45 | 0.75 |
| L1 | 1.00 REF | |
| L2 | 0.50 REF | |
| S | 0.20 | --- |
| R1 | 0.08 | --- |
| R2 | 0.08 | 0.20 |
| 0 | 0° | 7° |
| 01 | 0° | --- |
| 02 | 11° | 13° |

NOTES:
1. DIMENSIONING AND TOLERANCING PER ASME Y14.5M, 1994.
2. CONTROLLING DIMENSION: MILLIMETER.
3. DATUM PLANE H IS LOCATED AT BOTTOM OF LEAD AND IS COINCIDENT WITH THE LEAD WHERE THE LEAD EXITS THE PLASTIC BODY AT THE BOTTOM OF THE PARTING LINE.
4. DATUMS A, B, AND D TO BE DETERMINED AT DATUM PLANE H.
5. DIMENSIONS D AND E TO BE DETERMINED AT SEATING PLANE C.
6. DIMENSIONS D1 AND E1 DO NOT INCLUDE MOLD PROTRUSION. ALLOWABLE PROTRUSION IS 0.25 PER SIDE. DIMENSIONS D1 AND E1 DO INCLUDE MOLD MISMATCH AND ARE DETERMINED AT DATUM PLANE H.
7. DIMENSION b DOES NOT INCLUDE DAMBAR PROTRUSION. DAMBAR PROTRUSION SHALL NOT CAUSE THE b DIMENSION TO EXCEED 0.35.

**Figure 11-3 128-pin LQFP Mechanical Information**

Please see **www.freescale.com** for the most current case outline.

# Part 12 Design Considerations

## 12.1 Thermal Design Considerations

An estimation of the chip junction temperature, $T_J$, can be obtained from the equation:

$T_J = T_A + (R_{\theta JA} \times P_D)$
where:

$T_A$ = Ambient temperature for the package ($^oC$)
$R_{\theta JA}$ = Junction-to-ambient thermal resistance ($^oC/W$)
$P_D$ = Power dissipation in the package (W)

The junction-to-ambient thermal resistance is an industry-standard value that provides a quick and easy estimation of thermal performance. Unfortunately, there are two values in common usage: the value determined on a single-layer board and the value obtained on a board with two planes. For packages such as the PBGA, these values can be different by a factor of two. Which value is closer to the application depends on the power dissipated by other components on the board. The value obtained on a single-layer board is appropriate for the tightly packed printed circuit board. The value obtained on the board with the internal planes is usually appropriate if the board has low-power dissipation and the components are well separated.

When a heat sink is used, the thermal resistance is expressed as the sum of a junction-to-case thermal resistance and a case-to-ambient thermal resistance:

$R_{\theta JA} = R_{\theta JC} + R_{\theta CA}$
where:

$R_{\theta JA}$ = Package junction-to-ambient thermal resistance °C/W
$R_{\theta JC}$ = Package junction-to-case thermal resistance °C/W
$R_{\theta CA}$ = Package case-to-ambient thermal resistance °C/W

$R_{\theta JC}$ is device-related and cannot be influenced by the user. The user controls the thermal environment to change the case-to-ambient thermal resistance, $R_{\theta CA}$ . For instance, the user can change the size of the heat sink, the air flow around the device, the interface material, the mounting arrangement on printed circuit board, or change the thermal dissipation on the printed circuit board surrounding the device.

To determine the junction temperature of the device in the application when heat sinks are not used, the Thermal Characterization Parameter ($\Psi_{JT}$) can be used to determine the junction temperature with a measurement of the temperature at the top center of the package case using the following equation:

$T_J = T_T + (\Psi_{JT} \times P_D)$

where:

$T_T$ = Thermocouple temperature on top of package ($^oC$)
$\Psi_{JT}$ = Thermal characterization parameter ($^oC$)/W
$P_D$ = Power dissipation in package (W)

The thermal characterization parameter is measured per JESD51-2 specification using a 40-gauge type T thermocouple epoxied to the top center of the package case. The thermocouple should be positioned so that the thermocouple junction rests on the package. A small amount of epoxy is placed over the thermocouple junction and over about 1mm of wire extending from the junction. The thermocouple wire is placed flat against the package case to avoid measurement errors caused by cooling effects of the thermocouple wire.

When heat sink is used, the junction temperature is determined from a thermocouple inserted at the interface between the case of the package and the interface material. A clearance slot or hole is normally required in the heat sink. Minimizing the size of the clearance is important to minimize the change in thermal performance caused by removing part of the thermal interface to the heat sink. Because of the experimental difficulties with this technique, many engineers measure the heat sink temperature and then back-calculate the case temperature using a separate measurement of the thermal resistance of the interface. From this case temperature, the junction temperature is determined from the junction-to-case thermal resistance.

## 12.2 Electrical Design Considerations

**CAUTION**

**This device contains protective circuitry to guard against damage due to high static voltage or electrical fields. However, normal precautions are advised to avoid application of any voltages higher than maximum-rated voltages to this high-impedance circuit. Reliability of operation is enhanced if unused inputs are tied to an appropriate voltage level.**

Use the following list of considerations to assure correct operation of the 56F8365/56F8165:

- Provide a low-impedance path from the board power supply to each $V_{DD}$ pin on the device, and from the board ground to each $V_{SS}$ (GND) pin
- The minimum bypass requirement is to place six 0.01–0.1µF capacitors positioned as close as possible to the package supply pins. The recommended bypass configuration is to place one bypass capacitor on each of the $V_{DD}/V_{SS}$ pairs, including $V_{DDA}/V_{SSA.}$ Ceramic and tantalum capacitors tend to provide better performance tolerances.

- Ensure that capacitor leads and associated printed circuit traces that connect to the chip $V_{DD}$ and $V_{SS}$ (GND) pins are less than 0.5 inch per capacitor lead
- Use at least a four-layer Printed Circuit Board (PCB) with two inner layers for $V_{DD}$ and $V_{SS}$
- Bypass the $V_{DD}$ and $V_{SS}$ layers of the PCB with approximately 100µF, preferably with a high-grade capacitor such as a tantalum capacitor
- Because the device's output signals have fast rise and fall times, PCB trace lengths should be minimal
- Consider all device loads as well as parasitic capacitance due to PCB traces when calculating capacitance. This is especially critical in systems with higher capacitive loads that could create higher transient currents in the $V_{DD}$ and $V_{SS}$ circuits.
- Take special care to minimize noise levels on the $V_{REF}$, $V_{DDA}$ and $V_{SSA}$ pins
- Designs that utilize the $\overline{TRST}$ pin for JTAG port or OnCE module functionality (such as development or debugging systems) should allow a means to assert $\overline{TRST}$ whenever $\overline{RESET}$ is asserted, as well as a means to assert $\overline{TRST}$ independently of $\overline{RESET}$. Designs that do not require debugging functionality, such as consumer products, should tie these pins together.
- Because the Flash memory is programmed through the JTAG/OnCE port, the designer should provide an interface to this port to allow in-circuit Flash programming

## 12.3 Power Distribution and I/O Ring Implementation

**Figure 12-1** illustrates the general power control incorporated in the 56F8365/56F8165. This chip contains two internal power regulators. One of them is powered from the $V_{DDA_OSC_PLL}$ pin and cannot be turned off. This regulator controls power to the internal clock generation circuitry. The other regulator is powered from the $V_{DD_IO}$ pins and provides power to all of the internal digital logic of the core, all peripherals and the internal memories. This regulator can be turned off, if an external $V_{DD_CORE}$ voltage is externally applied to the $V_{CAP}$ pins.

In summary, the entire chip can be supplied from a single 3.3 volt supply if the large core regulator is enabled. If the regulator is not enabled, a dual supply 3.3V/2.5V configuration can also be used.

**Notes:**

- Flash, RAM and internal logic are powered from the core regulator output
- $V_{PP}1$ and $V_{PP}2$ are not connected in the customer system
- All circuitry, analog *and* digital, shares a common $V_{SS}$ bus

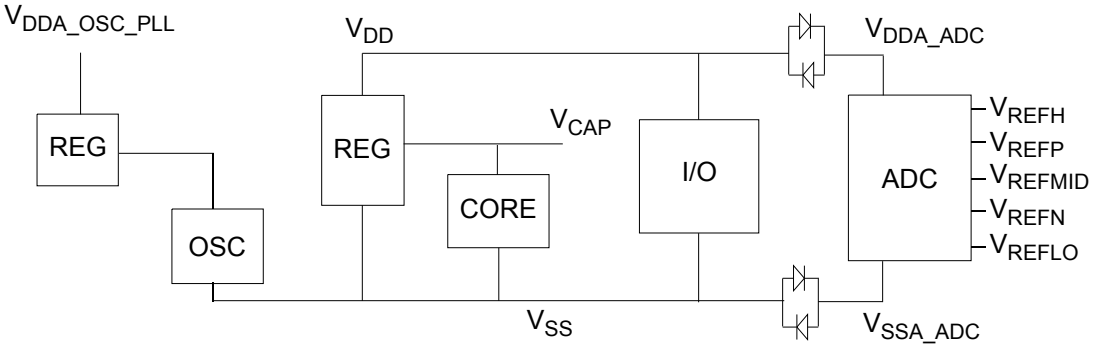


**Figure 12-1 Power Management**

# Part 13 Ordering Information

**Table 13-1** lists the pertinent information needed to place an order. Consult a Freescale Semiconductor sales office or authorized distributor to determine availability and to order parts.

**Table 13-1 Ordering Information**

| Part | Supply Voltage | Package Type | Pin Count | Frequency (MHz) | Ambient Temperature Range | Order Number |
|---|---|---|---|---|---|---|
| MC56F8365 | 3.0–3.6 V | Low-Profile Quad Flat Pack (LQFP) | 128 | 60 | -40° to + 105° C | MC56F8365VFG60 |
| MC56F8365 | 3.0–3.6 V | Low-Profile Quad Flat Pack (LQFP) | 128 | 60 | -40° to + 125° C | MC56F8365MFG60 |
| MC56F8165 | 3.0–3.6 V | Low-Profile Quad Flat Pack (LQFP) | 128 | 40 | -40° to + 105° C | MC56F8165VFG |
| | | | | | | |
| MC56F8365 | 3.0–3.6 V | Low-Profile Quad Flat Pack (LQFP) | 128 | 60 | -40° to + 105° C | MC56F8365VFGE* |
| MC56F8365 | 3.0–3.6 V | Low-Profile Quad Flat Pack (LQFP) | 128 | 60 | -40° to + 125° C | MC56F8365MFGE* |
| MC56F8165 | 3.0–3.6 V | Low-Profile Quad Flat Pack (LQFP) | 128 | 40 | -40° to + 105° C | MC56F8165VFGE* |

*This package is RoHS compliant.

**How to Reach Us:**

**Home Page:**
www.freescale.com

**Web Support:**
http://www.freescale.com/support

**USA/Europe or Locations Not Listed:**
Freescale Semiconductor, Inc.
Technical Information Center, EL516
2100 East Elliot Road
Tempe, Arizona 85284
+1-800-521-6274 or +1-480-768-2130
www.freescale.com/support

**Europe, Middle East, and Africa:**
Freescale Halbleiter Deutschland GmbH
Technical Information Center
Schatzbogen 7
81829 Muenchen, Germany
+44 1296 380 456 (English)
+46 8 52200080 (English)
+49 89 92103 559 (German)
+33 1 69 35 48 48 (French)
www.freescale.com/support

**Japan:**
Freescale Semiconductor Japan Ltd.
Headquarters
ARCO Tower 15F
1-8-1, Shimo-Meguro, Meguro-ku,
Tokyo 153-0064
Japan
0120 191014 or +81 3 5437 9125
support.japan@freescale.com

**Asia/Pacific:**
Freescale Semiconductor China Ltd.
Exchange Building 23F
No. 118 Jianguo Road
Chaoyang District
Beijing 100022
China
+86 10 5879 8000
support.asia@freescale.com

For Literature Requests Only:
Freescale Semiconductor Literature Distribution Center
1-800-441-2447 or 303-675-2140
Fax: 303-675-2150
LDCForFreescaleSemiconductor@hibbertgroup.com

RoHS-compliant and/or Pb-free versions of Freescale products have the functionality and electrical characteristics of their non-RoHS-compliant and/or non-Pb-free counterparts. For further information, see http://www.freescale.com or contact your Freescale sales representative.

For information on Freescale's Environmental Products program, go to http://www.freescale.com/epp.

Information in this document is provided solely to enable system and software implementers to use Freescale Semiconductor products. There are no express or implied copyright licenses granted hereunder to design or fabricate any integrated circuits or integrated circuits based on the information in this document.

Freescale Semiconductor reserves the right to make changes without further notice to any products herein. Freescale Semiconductor makes no warranty, representation or guarantee regarding the suitability of its products for any particular purpose, nor does Freescale Semiconductor assume any liability arising out of the application or use of any product or circuit, and specifically disclaims any and all liability, including without limitation consequential or incidental damages. "Typical" parameters that may be provided in Freescale Semiconductor data sheets and/or specifications can and do vary in different applications and actual performance may vary over time. All operating parameters, including "Typicals", must be validated for each customer application by customer's technical experts. Freescale Semiconductor does not convey any license under its patent rights nor the rights of others. Freescale Semiconductor products are not designed, intended, or authorized for use as components in systems intended for surgical implant into the body, or other applications intended to support or sustain life, or for any other application in which the failure of the Freescale Semiconductor product could create a situation where personal injury or death may occur. Should Buyer purchase or use Freescale Semiconductor products for any such unintended or unauthorized application, Buyer shall indemnify and hold Freescale Semiconductor and its officers, employees, subsidiaries, affiliates, and distributors harmless against all claims, costs, damages, and expenses, and reasonable attorney fees arising out of, directly or indirectly, any claim of personal injury or death associated with such unintended or unauthorized use, even if such claim alleges that Freescale Semiconductor was negligent regarding the design or manufacture of the part.

Freescale™ and the Freescale logo are trademarks of Freescale Semiconductor, Inc. All other product or service names are the property of their respective owners. This product incorporates SuperFlash® technology licensed from SST.

© Freescale Semiconductor, Inc. 2005–2012. All rights reserved.

MC56F8365
Rev. 9
02/2012