CYPRESS

EZ-PD™ CCG3PA-NFET: USB TYPE-C® PORT CONTROLLER WITH POWER DELIVERY

EZ-PD™ CCG3PA-NFET is Cypress' highly-integrated USB Type-C port controller with V_{BUS} NFET-Gate driver that complies with the latest USB Type-C and PD standards and is designed for power adaptors. CCG3PA-NFET offers significant BOM advantages by integrating all Type-C port termination resistors, 24V-tolerant regulator, a high voltage VBUS NFET gate driver, VBUS to CC short protection, and an integrated feedback circuitry for voltage (VBUS) regulation. CCG3PA-NFET is also offered in a pre-programmed version for customers looking for little to no customization.

FEATURES:

- USB PD 3.0 with PPS
- QC4.0
- Legacy charging (BC1.2, Samsung AFC, Apple charging)
- Integrates V_{BUS} NFET gate driver
- Integrates 24-V regulator
- Independent CC-CV loop
- Configurable OVP, OCP, and OTP
- 64KB Flash Memory
- Available in both pre-programmed and programmable versions

PACKAGES:

- 24-pin QFN

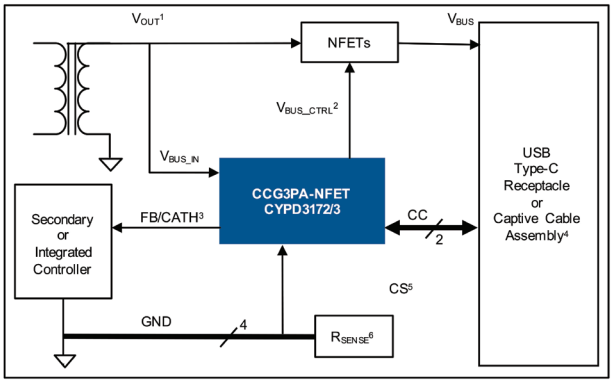

New Smartphone Charger with USB-C Receptacle

CCG3PA-NFET SOLUTION EXAMPLE: TYPE-C POWER ADAPTOR/MOBILE CHARGER

CCG3PA VALUE

CCG3PA-NFET Solution

- Provides Type-C solution with Power Delivery 3.0 (PD 3.0) with programmable power supply support and Quick Charge 4.0 (QC 4.0)
- Includes an Arm® Cortex® -M0 and certified USB-PD stack
- Integrates voltage regulation, 24-V-tolerant regulator, V_{BUS}-to-CC short protection, high-voltage NFET gate driver, and ESD protection
- Supports field upgrades with free, fully-compliant firmware

[1] Output voltage of the AC-to-DC adaptor
[2] Signal to control V_{BUS} load switch
[3] Output voltage selection using feedback control
[4] A cable permanently attached to the AC adaptor
[5] Current-sensing input
[6] Resistor used to sense overcurrent

www.cypress.com/CCG3PA

infineon + CYPRESS EMBEDDED IN TOMORROW™

SIMPLIFIED SYSTEM DESIGN WITH BOM INTEGRATION

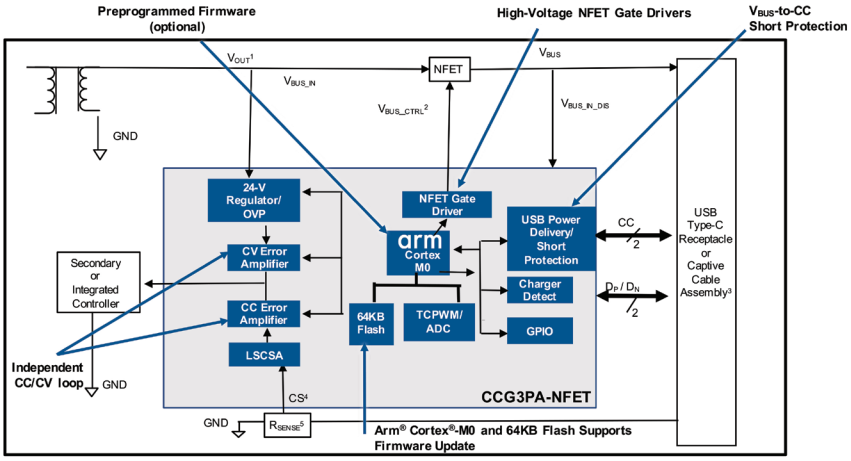

[1] Output voltage of the AC-to-DC adaptor

[2] Signal to control VBUS load switch

[3] A cable permanently attached to the AC adaptor

[4] Current-sensing input

[5] Resistor used to sense overcurrent

APPLICATIONS

Mobile Chargers | Power Adaptor

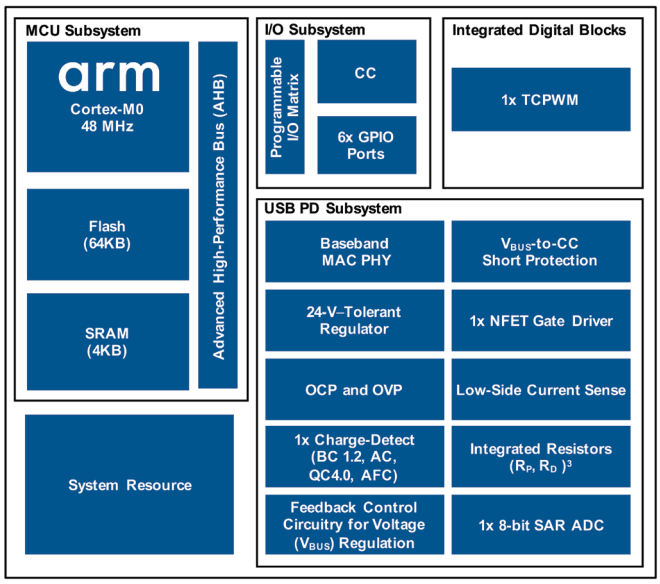

[1] Circuit to measure the current flowing on the VBUS

[2] Adaptive Fast Charging

[3] Termination resistors: RP read as a DFP, RD as a UFP

EZ-PD CCG3PA-NFET PORTFOLIO

Part Number	Application	Package
CYPD3172-24LQXQ	Power Adaptor based on Opto Coupler Feedback	24-Pin QFN
CYPD3172P-24LQXQ	Power Adaptor based on Opto Coupler Feedback (Programmable)	24-Pin QFN
CYPD3173-24LQXQ	Power Adaptor based on Direct Feedback	24-Pin QFN
CYPD3173P-24LQXQ	Power Adaptor based on Direct Feedback (Programmable)	24-Pin QFN

CONTACT

For more information, visit www.cypress.com/ccg3pa

Cypress Semiconductor Corporation

198 Champion Court, San Jose CA 95134
phone +1 408.943.2600 fax +1 408.943.6848
toll free +1 800.858.1810 (U.S. only) Press “1” to reach your local sales representative

© 2020 Cypress Semiconductor Corporation. An Infineon Technologies Company. All rights reserved.
All trademarks or registered trademarks referenced herein are the property of their respective owners.

002-30450**