MS82C55A, MQ82C55A, MP82C55A

CMOS Programmable Peripheral Interface

FN6140
Rev 2.00
June 15, 2006

The Intersil 82C55A is a high performance CMOS version of the industry standard 8255A and is manufactured using a self-aligned silicon gate CMOS process (Scaled SAJI IV). The MX82C55A has identical features as the X82C55 with the exception of no bus hold devices on the port pins. It is a general purpose programmable I/O device which may be used with many different microprocessors. There are 24 I/O pins which may be individually programmed in two groups of 12 and used in three major modes of operation. The high performance and industry standard configuration of the 82C55A make it compatible with the 80C86, 80C88 and other microprocessors.

Static CMOS circuit design insures low operating power. The Intersil advanced SAJI process results in performance equal to or greater than existing functionally equivalent products at a fraction of the power.

Ordering Information

PART NUMBERS* (Note)	PART MARKING	TEMP. RANGE (°C)	PACKAGE (Pb-free)	PKG. DWG. #
CMP82C55AZ	CMP82C55AZ	0 to 70	40 Ld PDIP**	E40.6
CMS82C55AZ	CMS82C55AZ	0 to 70	44 Ld PLCC	N44.65
IMS82C55AZ	IMS82C55AZ	-40 to 85		
CMQ82C55AZ	CMQ82C55AZ	0 to 70	44 Ld MQFP	Q44.10x10
IMQ82C55AZ	IMQ82C55AZ	-40 to 85		

*Add “96” suffix to part number for tape and reel packaging.

**Pb-free PDIPs can be used for through hole wave solder processing only. They are not intended for use in Reflow solder processing applications.

NOTE: Intersil Pb-free plus anneal products employ special Pb-free material sets; molding compounds/die attach materials and 100% matte tin plate termination finish, which are RoHS compliant and compatible with both SnPb and Pb-free soldering operations. Intersil Pb-free products are MSL classified at Pb-free peak reflow temperatures that meet or exceed the Pb-free requirements of IPC/JEDEC J STD-020.

Features

- Pb-Free Plus Anneal Available (RoHS Compliant) (See Ordering Info)
- Pin Compatible with OKI MSM82C55A
  - No Bus Hold Devices on any Port Pins
- 24 Programmable I/O Pins
- Fully TTL Compatible
- High Speed, No “Wait State” Operation with 8MHz 80C86 and 80C88
- Direct Bit Set/Reset Capability
- Enhanced Control Word Read Capability
- L7 Process
- 2.5mA Drive Capability on All I/O Ports
- Low Standby Power (ICCSB) 10µA

Pinouts

MS82C55A (PLCC)
TOP VIEW

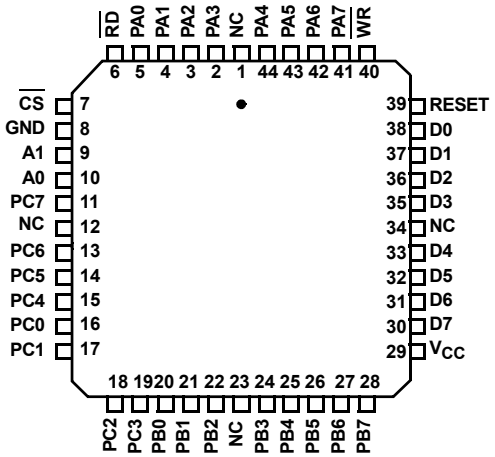

MQ82C55A (MQFP)
TOP VIEW

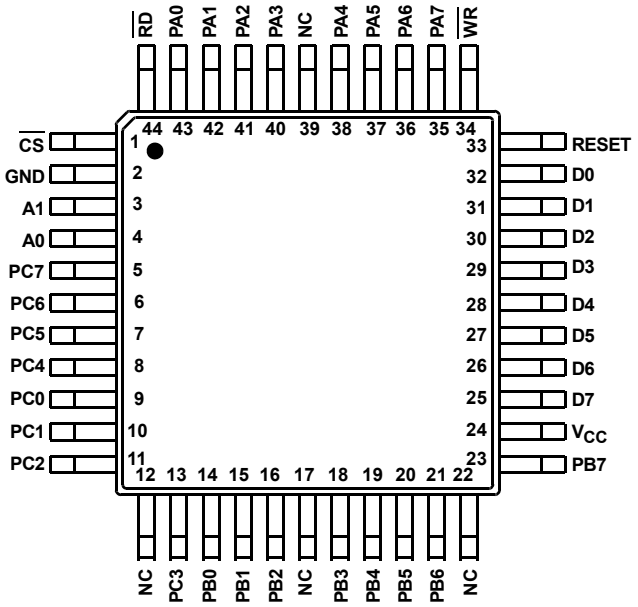

CMP82C55A (PDIP)
TOP VIEW

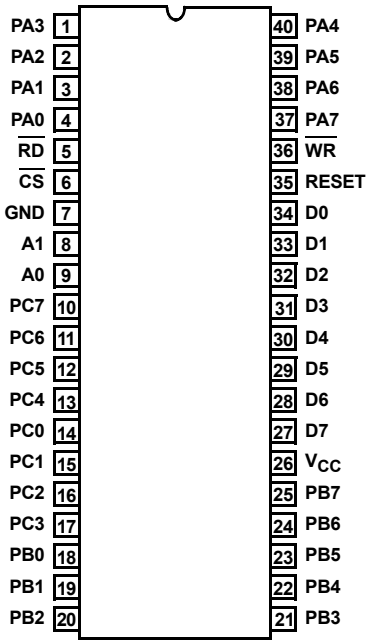

Pin Description

SYMBOL	TYPE	DESCRIPTION
V_{CC}		V_{CC}: The +5V power supply pin. A 0.1µF capacitor between V_{CC} and GND is recommended for decoupling.
GND		GROUND
D0-D7	I/O	DATA BUS: The Data Bus lines are bidirectional three-state pins connected to the system data bus.
RESET	I	RESET: A high on this input clears the control register and all ports (A, B, C) are set to the input mode.
$\overline{CS}$	I	CHIP SELECT: Chip select is an active low input used to enable the 82C55A onto the Data Bus for CPU communications.
$\overline{RD}$	I	READ: Read is an active low input control signal used by the CPU to read status information or data via the data bus.
$\overline{WR}$	I	WRITE: Write is an active low input control signal used by the CPU to load control words and data into the 82C55A.
A0-A1	I	ADDRESS: These input signals, in conjunction with the $\overline{RD}$ and $\overline{WR}$ inputs, control the selection of one of the three ports or the control word register. A0 and A1 are normally connected to the least significant bits of the Address Bus A0, A1.
PA0-PA7	I/O	PORT A: 8-bit input and output port.
PB0-PB7	I/O	PORT B: 8-bit input and output port.
PC0-PC7	I/O	PORT C: 8-bit input and output port.

Functional Diagram

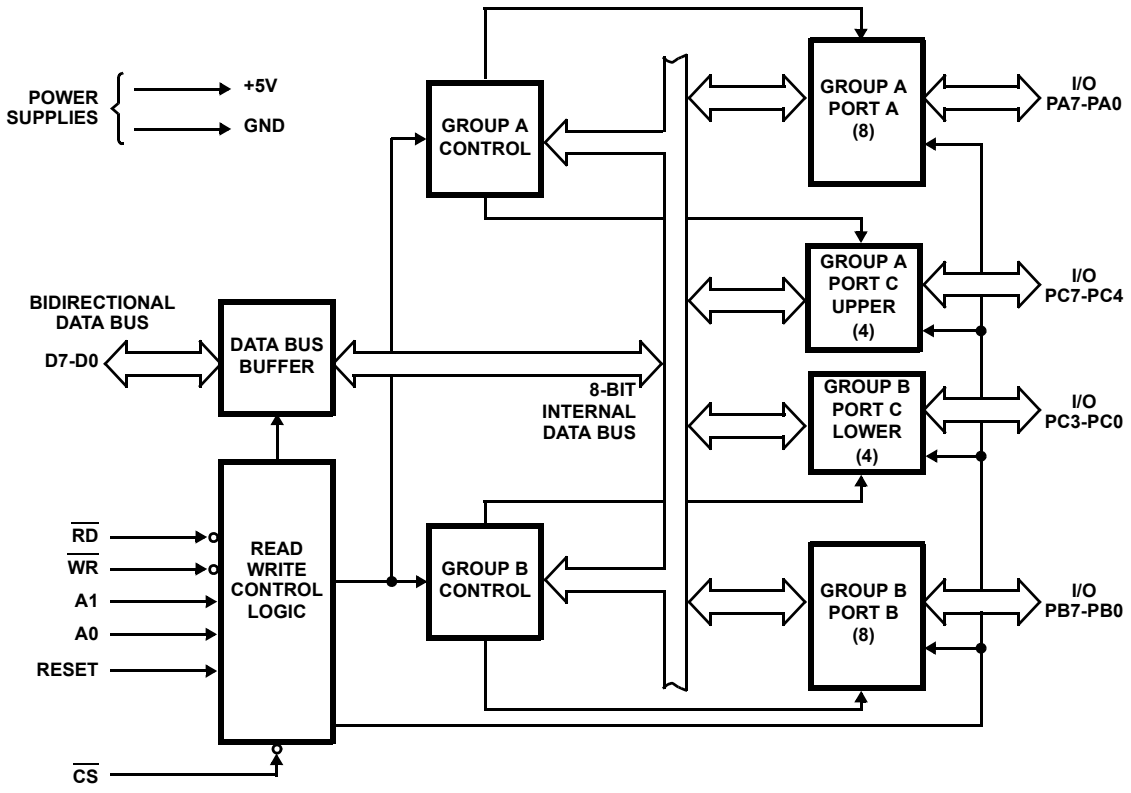

FIGURE 1. FUNCTIONAL DIAGRAM

Functional Description

Data Bus Buffer

This three-state bidirectional 8-bit buffer is used to interface the 82C55A to the system data bus. Data is transmitted or received by the buffer upon execution of input or output instructions by the CPU. Control words and status information are also transferred through the data bus buffer.

Read/Write and Control Logic

The function of this block is to manage all of the internal and external transfers of both Data and Control or Status words. It accepts inputs from the CPU Address and Control busses and in turn, issues commands to both of the Control Groups.

($\overline{CS}$) Chip Select. A “low” on this input pin enables the communication between the 82C55A and the CPU.

($\overline{RD}$) Read. A “low” on this input pin enables 82C55A to send the data or status information to the CPU on the data bus. In essence, it allows the CPU to “read from” the 82C55A.

($\overline{WR}$) Write. A “low” on this input pin enables the CPU to write data or control words into the 82C55A.

(A0 and A1) Port Select 0 and Port Select 1. These input signals, in conjunction with the RD and WR inputs, control the selection of one of the three ports or the control word register. They are normally connected to the least significant bits of the address bus (A0 and A1).

82C55A BASIC OPERATION

A1	A0	$\overline{RD}$	$\overline{WR}$	$\overline{CS}$	INPUT OPERATION (READ)
0	0	0	1	0	Port A → Data Bus
0	1	0	1	0	Port B → Data Bus
1	0	0	1	0	Port C → Data Bus
1	1	0	1	0	Control Word → Data Bus
					OUTPUT OPERATION (WRITE)
0	0	1	0	0	Data Bus → Port A
0	1	1	0	0	Data Bus → Port B
1	0	1	0	0	Data Bus → Port C
1	1	1	0	0	Data Bus → Control
					DISABLE FUNCTION
X	X	X	X	1	Data Bus → Three-State
X	X	1	1	0	Data Bus → Three-State

(RESET) Reset. A “high” on this input initializes the control register to 9Bh and all ports (A, B, C) are set to the input mode.

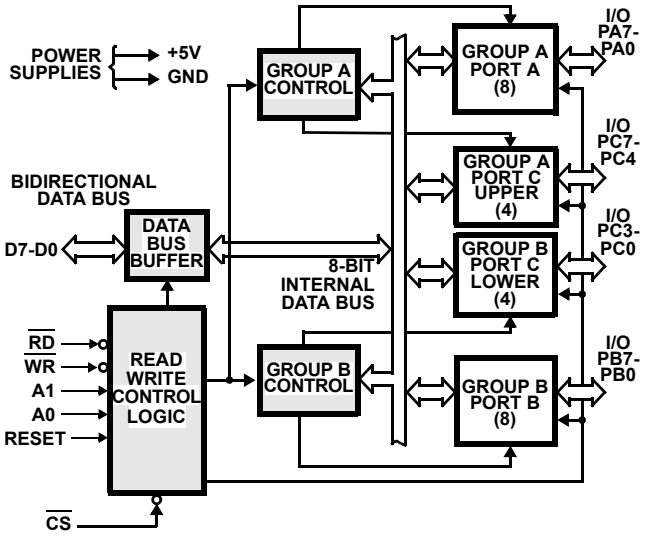

FIGURE 2. 82C55A BLOCK DIAGRAM. DATA BUS BUFFER, READ/WRITE, GROUP A & B CONTROL LOGIC FUNCTIONS

Group A and Group B Controls

The functional configuration of each port is programmed by the systems software. In essence, the CPU “outputs” a control word to the 82C55A. The control word contains information such as “mode”, “bit set”, “bit reset”, etc., that initializes the functional configuration of the 82C55A.

Each of the Control blocks (Group A and Group B) accepts “commands” from the Read/Write Control logic, receives “control words” from the internal data bus and issues the proper commands to its associated ports.

Control Group A - Port A and Port C upper (C7 - C4)

Control Group B - Port B and Port C lower (C3 - C0)

The control word register can be both written and read as shown in the “Basic Operation” table. Figure 4 shows the control word format for both Read and Write operations. When the control word is read, bit D7 will always be a logic “1”, as this implies control word mode information.

Ports A, B, and C

The 82C55A contains three 8-bit ports (A, B, and C). All can be configured to a wide variety of functional characteristics by the system software but each has its own special features or “personality” to further enhance the power and flexibility of the 82C55A.

Port A One 8-bit data output latch/buffer and one 8-bit data input latch.

Port B One 8-bit data input/output latch/buffer and one 8-bit data input buffer.

Port C One 8-bit data output latch/buffer and one 8-bit data input buffer (no latch for input). This port can be divided into two 4-bit ports under the mode control. Each 4-bit port contains a 4-bit latch and it can be used for the control signal output and status signal inputs in conjunction with ports A and B.

Operational Description

Mode Selection

There are three basic modes of operation than can be selected by the system software:

Mode 0 - Basic Input/Output
Mode 1 - Strobed Input/Output
Mode 2 - Bidirectional Bus

When the reset input goes “high”, all ports will be set to the input mode. After the reset is removed, the 82C55A can remain in the input mode with no additional initialization required. The control word register will contain 9Bh. During the execution of the system program, any of the other modes may be selected using a single output instruction. This allows a single 82C55A to service a variety of peripheral devices with a simple software maintenance routine. Any port programmed as an output port is initialized to all zeros when the control word is written.

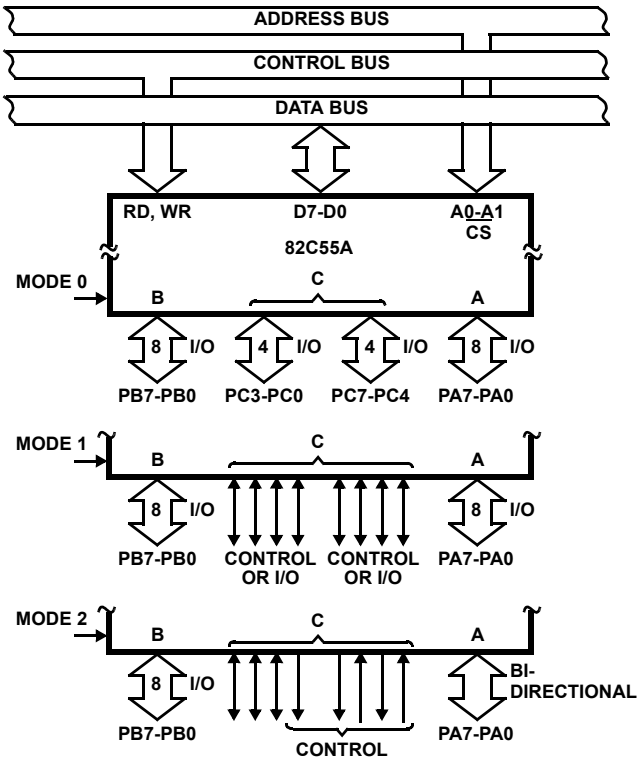

FIGURE 3. BASIC MODE DEFINITIONS AND BUS INTERFACE

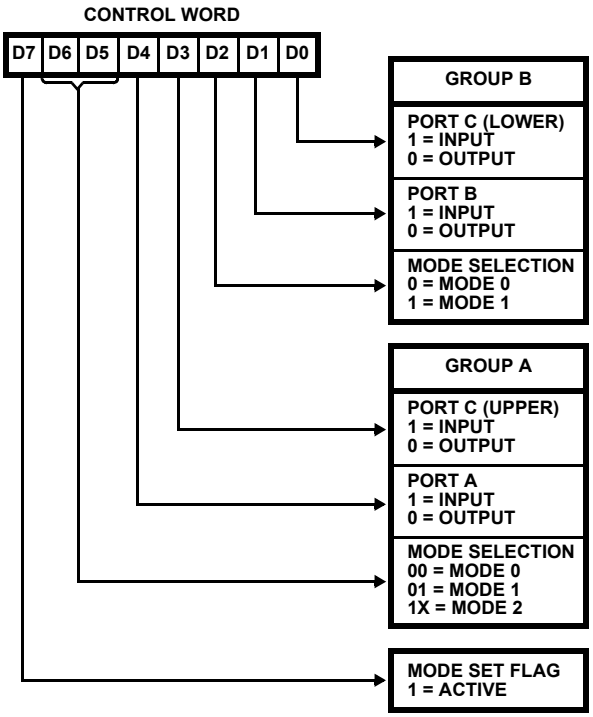

FIGURE 4. MODE DEFINITION FORMAT

The modes for Port A and Port B can be separately defined, while Port C is divided into two portions as required by the Port A and Port B definitions. All of the output registers, including the status flip-flops, will be reset whenever the mode is changed. Modes may be combined so that their functional definition can be “tailored” to almost any I/O structure. For instance: Group B can be programmed in Mode 0 to monitor simple switch closings or display computational results, Group A could be programmed in Mode 1 to monitor a keyboard or tape reader on an interrupt-driven basis.

The mode definitions and possible mode combinations may seem confusing at first, but after a cursory review of the complete device operation a simple, logical I/O approach will surface. The design of the 82C55A has taken into account things such as efficient PC board layout, control signal definition vs. PC layout and complete functional flexibility to support almost any peripheral device with no external logic. Such design represents the maximum use of the available pins.

Single Bit Set/Reset Feature (Figure 5)

Any of the eight bits of Port C can be Set or Reset using a single Output instruction. This feature reduces software requirements in control-based applications.

When Port C is being used as status/control for Port A or B, these bits can be set or reset by using the Bit Set/Reset operation just as if they were output ports.

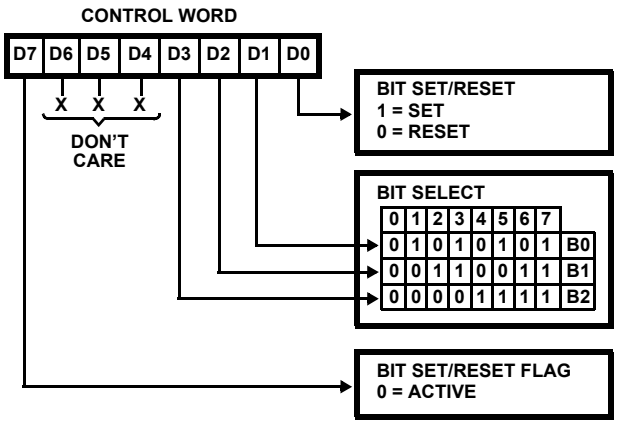

FIGURE 5. BIT SET/RESET FORMAT

Interrupt Control Functions

When the 82C55A is programmed to operate in mode 1 or mode 2, control signals are provided that can be used as interrupt request inputs to the CPU. The interrupt request signals, generated from port C, can be inhibited or enabled by setting or resetting the associated INTE flip-flop, using the bit set/reset function of port C.

This function allows the programmer to enable or disable a CPU interrupt by a specific I/O device without affecting any other device in the interrupt structure.

INTE Flip-Flop Definition

(BIT-SET)-INTE is SET - Interrupt Enable

(BIT-RESET)-INTE is Reset - Interrupt Disable

NOTE: All Mask flip-flops are automatically reset during mode selection and device Reset.

Operating Modes

Mode 0 (Basic Input/Output). This functional configuration provides simple input and output operations for each of the three ports. No handshaking is required, data is simply written to or read from a specific port.

Mode 0 Basic Functional Definitions:

- Two 8-bit ports and two 4-bit ports
- Any Port can be input or output
- Outputs are latched
- Inputs are not latched
- 16 different Input/Output configurations possible

MODE 0 PORT DEFINITION

A		B		GROUP A			GROUP B	
D4	D3	D1	D0	PORT A	PORTC (Upper)	#	PORT B	PORTC (Lower)
0	0	0	0	Output	Output	0	Output	Output
0	0	0	1	Output	Output	1	Output	Input
0	0	1	0	Output	Output	2	Input	Output
0	0	1	1	Output	Output	3	Input	Input
0	1	0	0	Output	Input	4	Output	Output
0	1	0	1	Output	Input	5	Output	Input
0	1	1	0	Output	Input	6	Input	Output
0	1	1	1	Output	Input	7	Input	Input
1	0	0	0	Input	Output	8	Output	Output
1	0	0	1	Input	Output	9	Output	Input
1	0	1	0	Input	Output	10	Input	Output
1	0	1	1	Input	Output	11	Input	Input
1	1	0	0	Input	Input	12	Output	Output
1	1	0	1	Input	Input	13	Output	Input
1	1	1	0	Input	Input	14	Input	Output
1	1	1	1	Input	Input	15	Input	Input

Mode 0 (Basic Input)

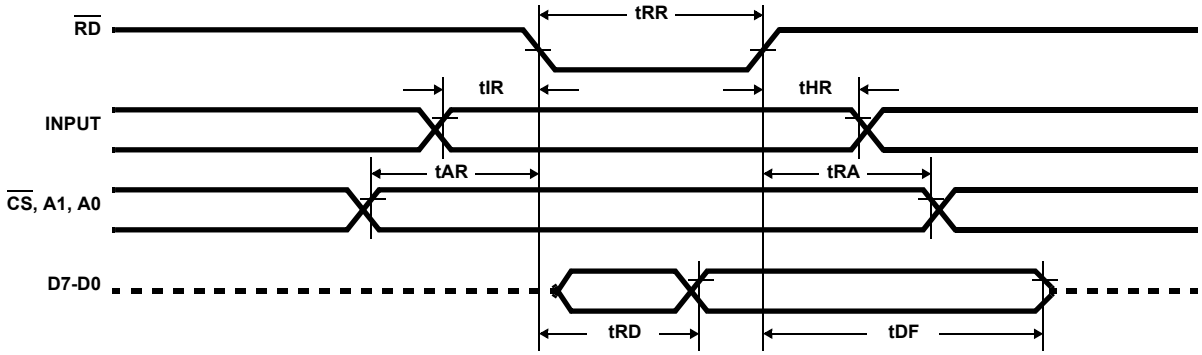

Mode 0 (Basic Output)

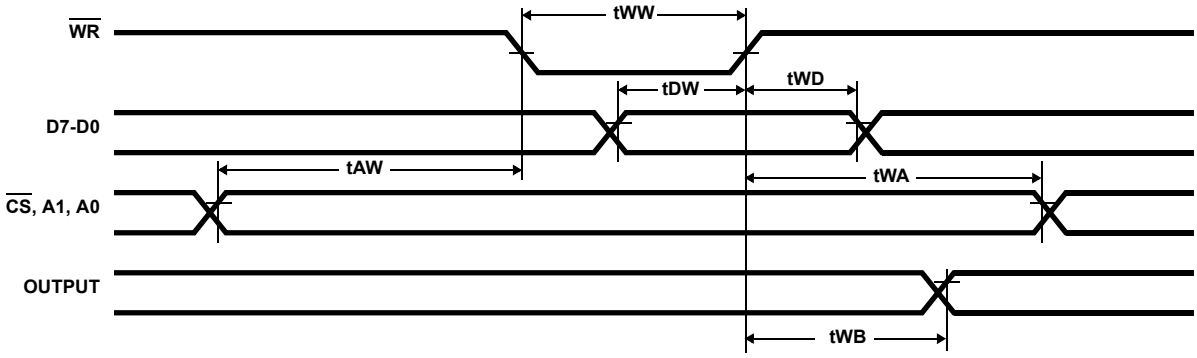

Mode 0 Configurations

CONTROL WORD #0

D7	D6	D5	D4	D3	D2	D1	D0
1	0	0	0	0	0	0	0

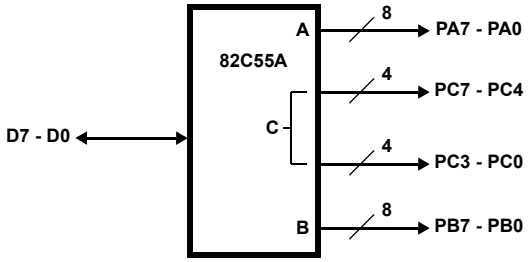

CONTROL WORD #2

D7	D6	D5	D4	D3	D2	D1	D0
1	0	0	0	0	0	1	0

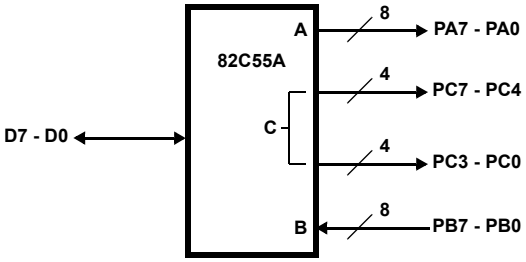

CONTROL WORD #1

D7	D6	D5	D4	D3	D2	D1	D0
1	0	0	0	0	0	0	1

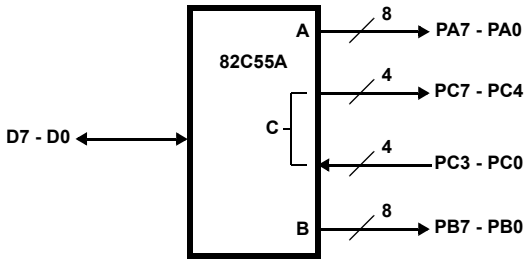

CONTROL WORD #3

D7	D6	D5	D4	D3	D2	D1	D0
1	0	0	0	0	0	1	1

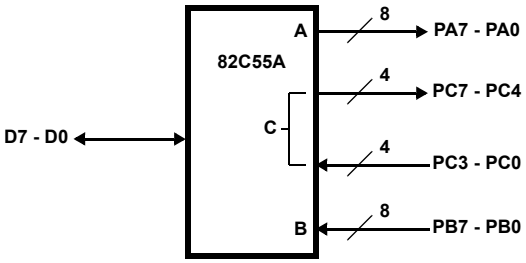

CONTROL WORD #4

D7	D6	D5	D4	D3	D2	D1	D0
1	0	0	0	1	0	0	0

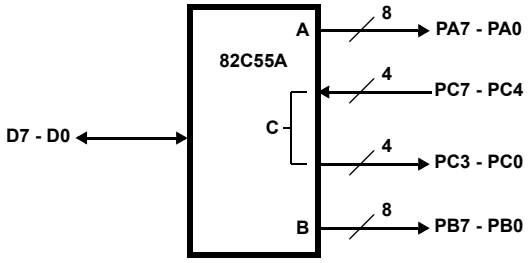

CONTROL WORD #8

D7	D6	D5	D4	D3	D2	D1	D0
1	0	0	1	0	0	0	0

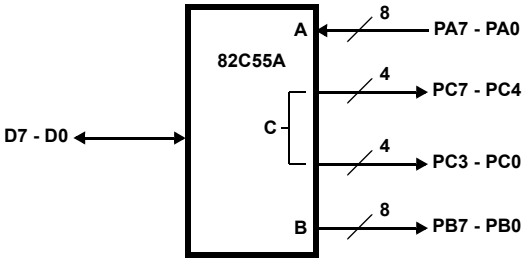

Mode 0 Configurations (Continued)

CONTROL WORD #5

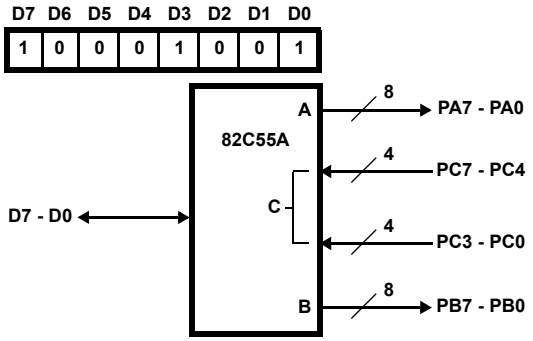

CONTROL WORD #9

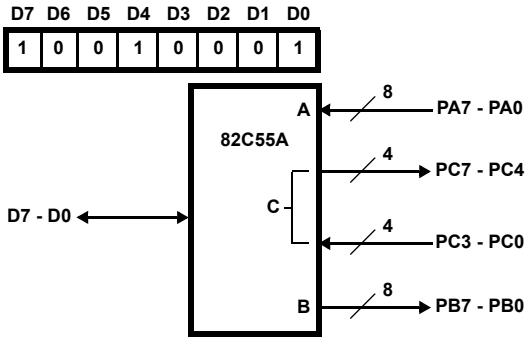

CONTROL WORD #6

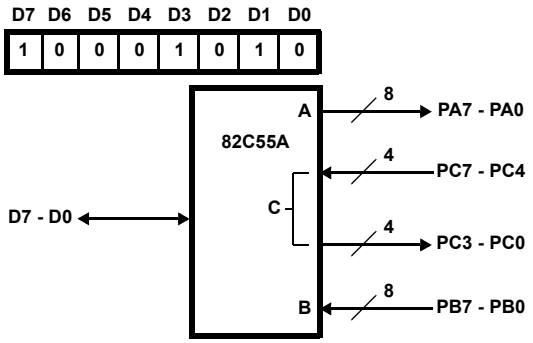

CONTROL WORD #10

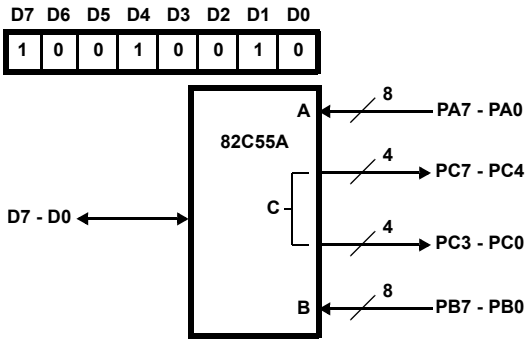

CONTROL WORD #7

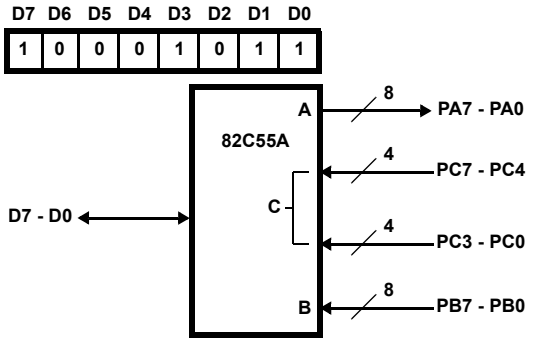

CONTROL WORD #11

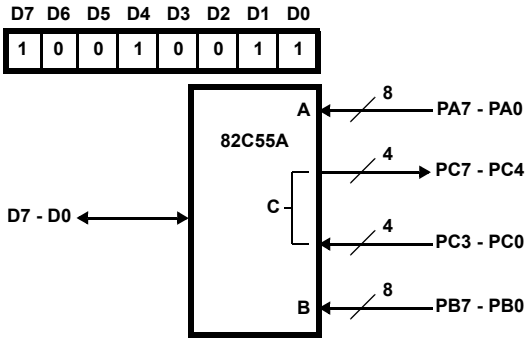

CONTROL WORD #12

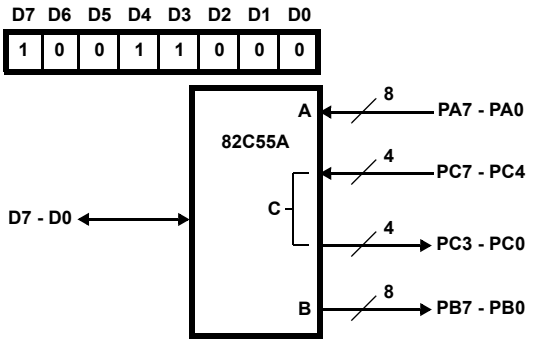

CONTROL WORD #14

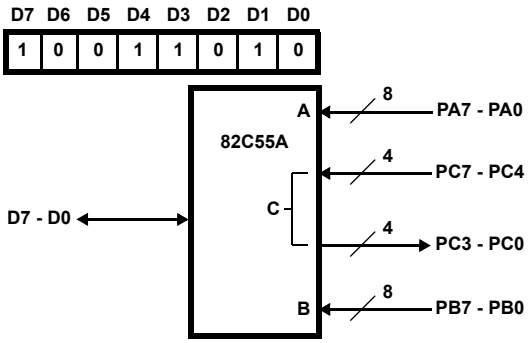

Mode 0 Configurations (Continued)

CONTROL WORD #13

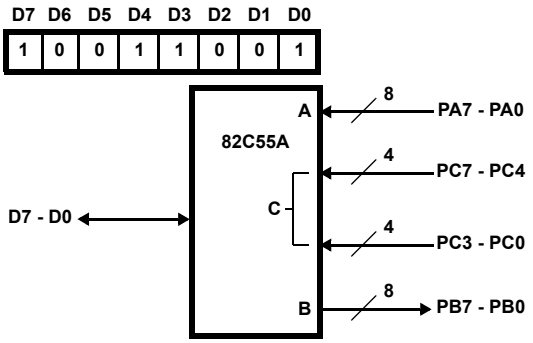

CONTROL WORD #15

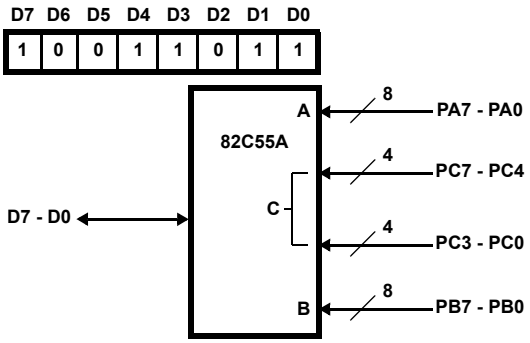

Operating Modes

Mode 1 - (Strobed Input/Output). This functional configuration provides a means for transferring I/O data to or from a specified port in conjunction with strobes or “hand shaking” signals. In mode 1, port A and port B use the lines on port C to generate or accept these “hand shaking” signals.

Mode 1 Basic Function Definitions:

- Two Groups (Group A and Group B)
- Each group contains one 8-bit port and one 4-bit control/data port
- The 8-bit data port can be either input or output. Both inputs and outputs are latched.
- The 4-bit port is used for control and status of the 8-bit port.

Input Control Signal Definition

(Figures 6 and 7)

$\overline{\text{STB}}$ (Strobe Input)

A “low” on this input loads data into the input latch.

IBF (Input Buffer Full F/F)

A “high” on this output indicates that the data has been loaded into the input latch: in essence, an acknowledgment. IBF is set by $\overline{\text{STB}}$ input being low and is reset by the rising edge of the $\overline{\text{RD}}$ input.

INTR (Interrupt Request)

A “high” on this output can be used to interrupt the CPU when an input device is requesting service. INTR is set by the condition: $\overline{\text{STB}}$ is a “one”, IBF is a “one” and INTE is a “one”. It is reset by the falling edge of $\overline{\text{RD}}$. This procedure allows an input device to request service from the CPU by simply strobing its data into the port.

INTE A

Controlled by bit set/reset of PC4.

INTE B

Controlled by bit set/reset of PC2.

Output Control Signal Definition

(Figure 8 and 9)

$\overline{\text{OBF}}$ - (Output Buffer Full F/F). The $\overline{\text{OBF}}$ output will go “low” to indicate that the CPU has written data out to the specified port. This does not mean valid data is sent out of the port at this time since $\overline{\text{OBF}}$ can go true before data is available. Data is guaranteed valid at the rising edge of $\overline{\text{OBF}}$, (See Note 1). The $\overline{\text{OBF}}$ F/F will be set by the rising edge of the $\overline{\text{WR}}$ input and reset by $\overline{\text{ACK}}$ input being low.

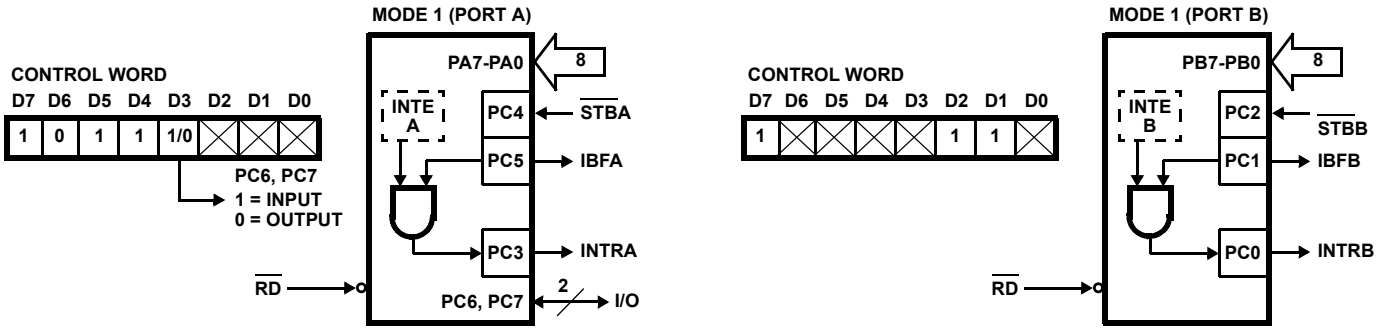

FIGURE 6. MODE 1 INPUT

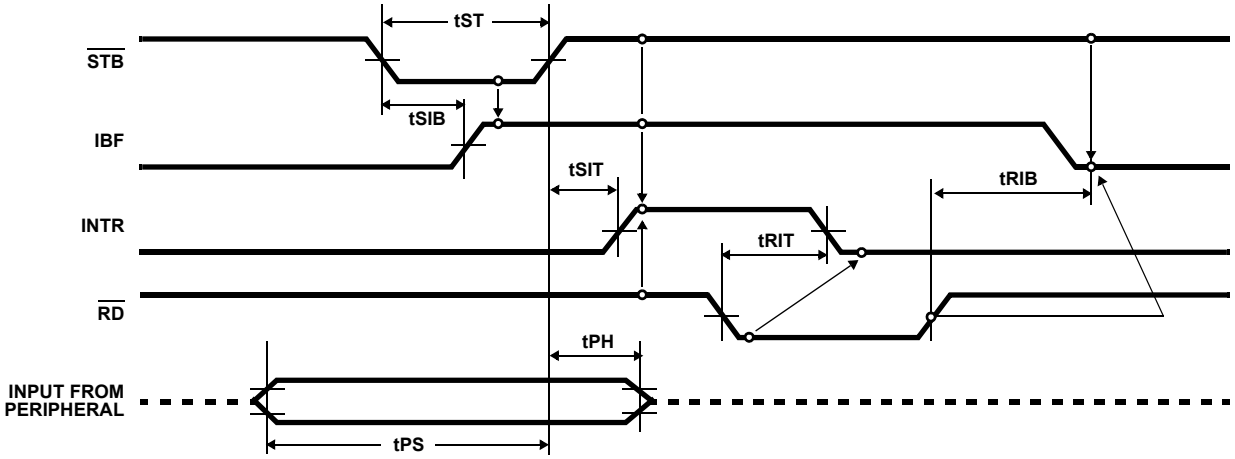

FIGURE 7. MODE 1 (STROBED INPUT)

$\overline{\text{ACK}}$ - (Acknowledge Input). A “low” on this input informs the 82C55A that the data from Port A or Port B is ready to be accepted. In essence, a response from the peripheral device indicating that it is ready to accept data, (See Note 1).

INTR - (Interrupt Request). A “high” on this output can be used to interrupt the CPU when an output device has accepted data transmitted by the CPU. INTR is set when $\overline{\text{ACK}}$ is a “one”, $\overline{\text{OBF}}$ is a “one” and INTE is a “one”. It is reset by the falling edge of $\overline{\text{WR}}$.

INTE A

Controlled by Bit Set/Reset of PC6.

INTE B

Controlled by Bit Set/Reset of PC2.

NOTE:

1. To strobe data into the peripheral device, the user must operate the strobe line in a hand shaking mode. The user needs to send $\overline{\text{OBF}}$ to the peripheral device, generates an $\overline{\text{ACK}}$ from the peripheral device and then latch data into the peripheral device on the rising edge of $\overline{\text{OBF}}$.

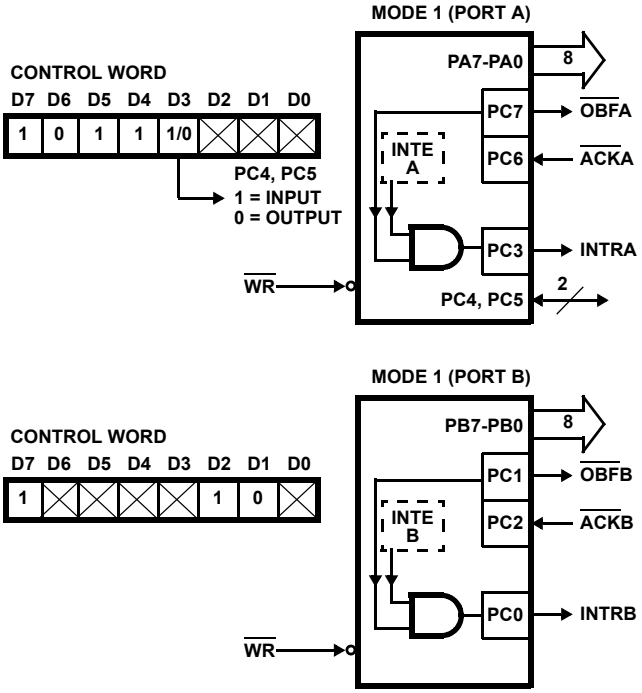

FIGURE 8. MODE 1 OUTPUT

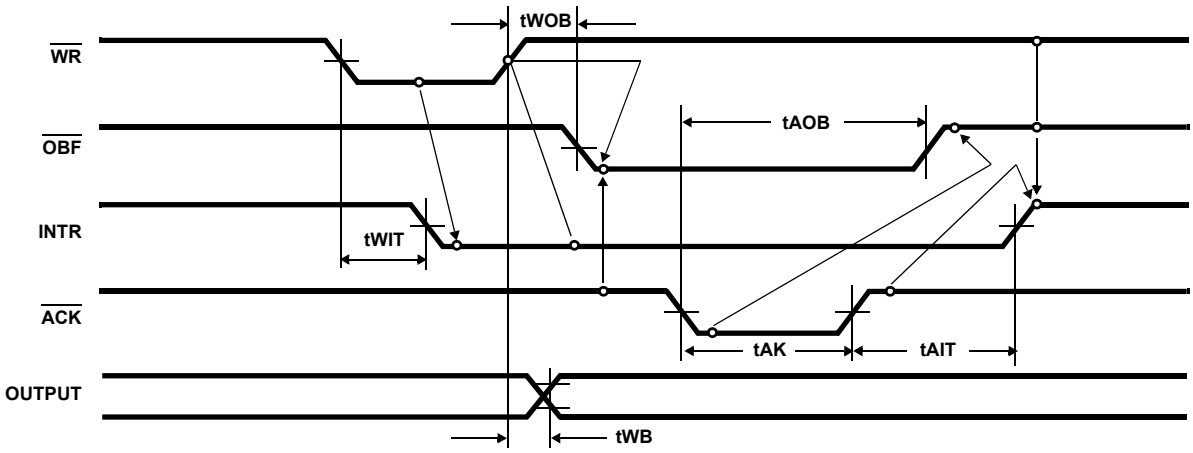

FIGURE 9. MODE 1 (STROBED OUTPUT)

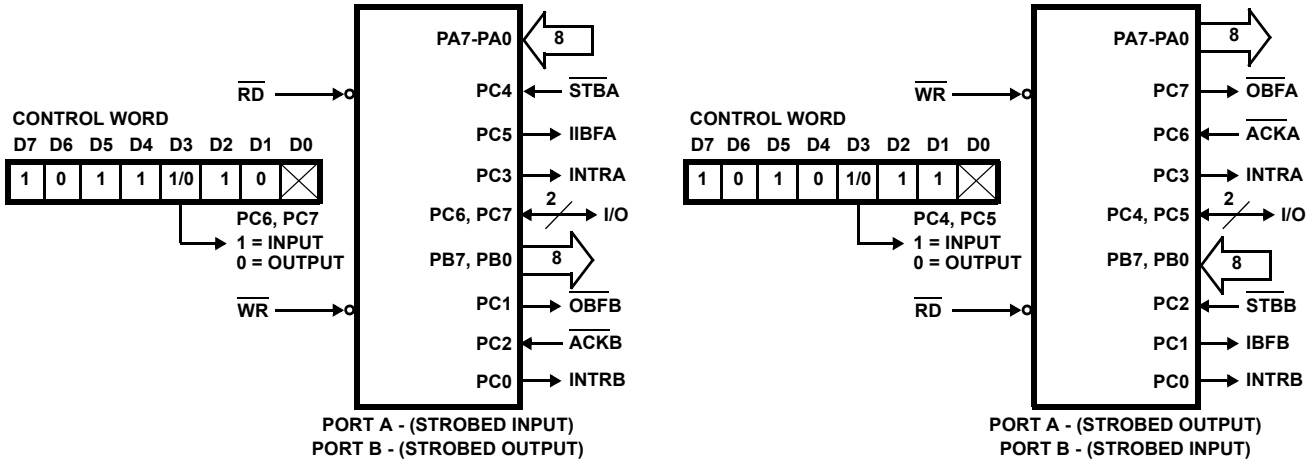

Combinations of Mode 1: Port A and Port B can be individually defined as input or output in Mode 1 to support a wide variety of strobed I/O applications.

FIGURE 10. COMBINATIONS OF MODE 1

Operating Modes

Mode 2 (Strobed Bidirectional Bus I/O)

This functional configuration provides a means for communicating with a peripheral device or structure on a single 8-bit bus for both transmitting and receiving data (bidirectional bus I/O). “Hand shaking” signals are provided to maintain proper bus flow discipline similar to Mode 1. Interrupt generation and enable/disable functions are also available.

Mode 2 Basic Functional Definitions:

- Used in Group A only
- One 8-bit, bidirectional bus Port (Port A) and a 5-bit control Port (Port C)
- Both inputs and outputs are latched
- The 5-bit control port (Port C) is used for control and status for the 8-bit, bidirectional bus port (Port A)

Bidirectional Bus I/O Control Signal Definition

(Figures 11, 12, 13, 14)

INTR - (Interrupt Request). A high on this output can be used to interrupt the CPU for both input or output operations.

Output Operations

$\overline{\text{OBF}}$ - (Output Buffer Full). The $\overline{\text{OBF}}$ output will go “low” to indicate that the CPU has written data out to port A.

$\overline{\text{ACK}}$ - (Acknowledge). A “low” on this input enables the three-state output buffer of port A to send out the data. Otherwise, the output buffer will be in the high impedance state.

INTE 1 - (The INTE flip-flop associated with $\overline{\text{OBF}}$). Controlled by bit set/reset of PC4.

Input Operations

$\overline{\text{STB}}$ - (Strobe Input). A “low” on this input loads data into the input latch.

IBF - (Input Buffer Full F/F). A “high” on this output indicates that data has been loaded into the input latch.

INTE 2 - (The INTE flip-flop associated with IBF). Controlled by bit set/reset of PC4.

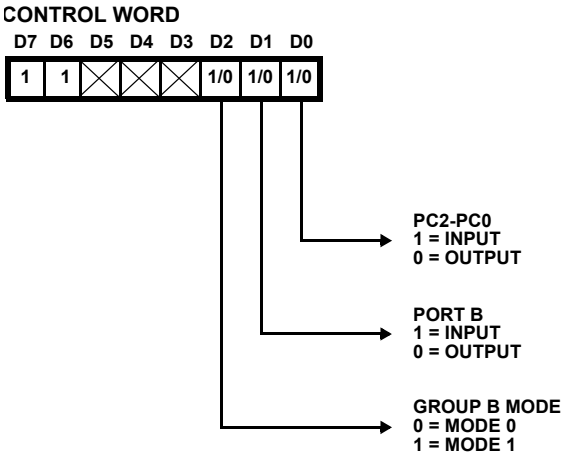

FIGURE 11. MODE CONTROL WORD

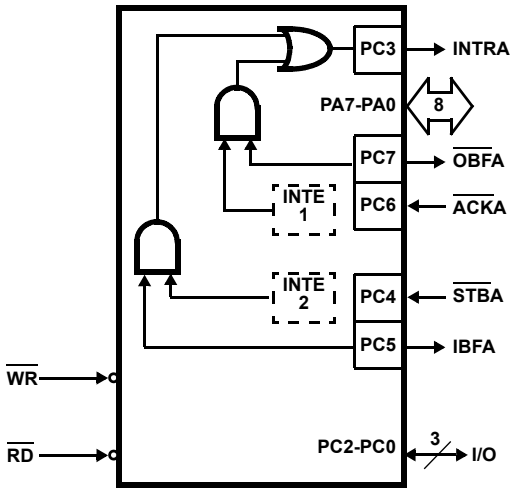

FIGURE 12. MODE 2

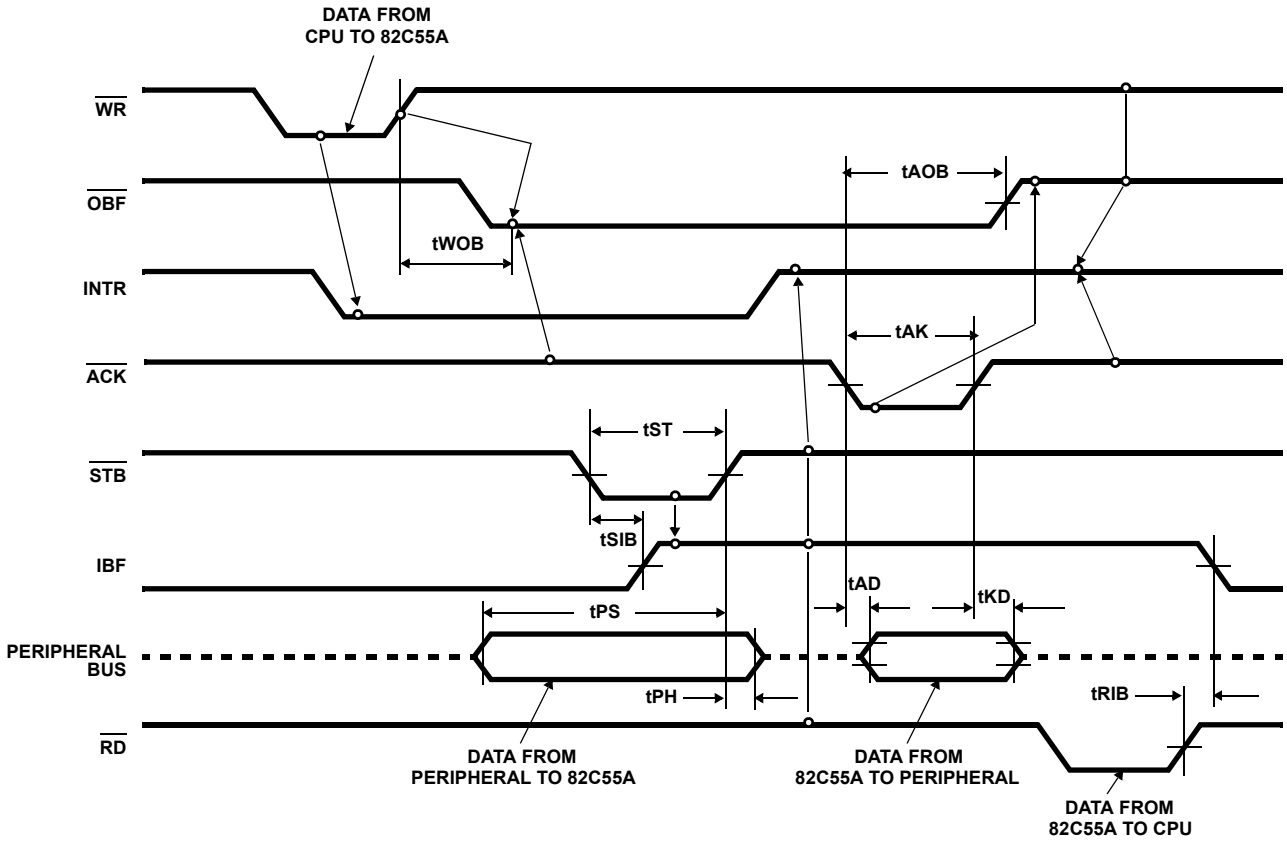

NOTE: Any sequence where $\overline{WR}$ occurs before $\overline{ACK}$ and $\overline{STB}$ occurs before RD is permissible. (INTR = IBF • MASK • $\overline{STB}$ • $\overline{RD}$ + $\overline{OBF}$ • MASK • $\overline{ACK}$ • $\overline{WR}$)

FIGURE 13. MODE 2 (BIDIRECTIONAL)

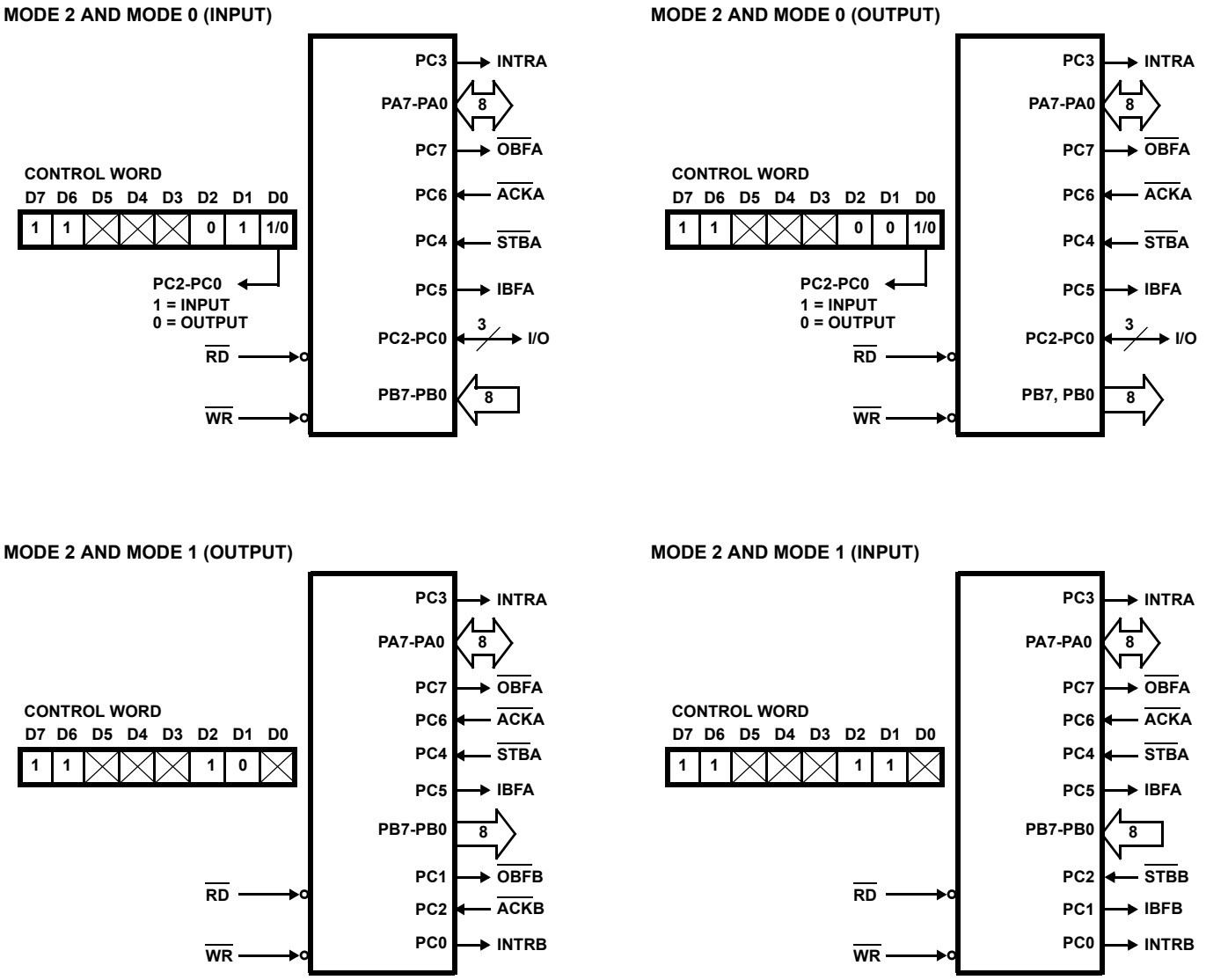

FIGURE 14. MODE 2 COMBINATIONS

MODE DEFINITION SUMMARY

	MODE 0		MODE 1		MODE 2	
	IN	OUT	IN	OUT	GROUP A ONLY	
PA0	In	Out	In	Out	↔	
PA1	In	Out	In	Out	↔	
PA2	In	Out	In	Out	↔	
PA3	In	Out	In	Out	↔	
PA4	In	Out	In	Out	↔	
PA5	In	Out	In	Out	↔	
PA6	In	Out	In	Out	↔	
PA7	In	Out	In	Out	↔	
PB0	In	Out	In	Out		Mode 0 or Mode 1 Only
PB1	In	Out	In	Out		
PB2	In	Out	In	Out		
PB3	In	Out	In	Out		
PB4	In	Out	In	Out		
PB5	In	Out	In	Out		
PB6	In	Out	In	Out		
PB7	In	Out	In	Out		
PC0	In	Out	INTRB	INTRB	I/O	
PC1	In	Out	IBFB	OBFB	I/O	
PC2	In	Out	STBB	ACKB	I/O	
PC3	In	Out	INTRA	INTRA	INTRA	
PC4	In	Out	STBA	I/O	STBA	
PC5	In	Out	IBFA	I/O	IBFA	
PC6	In	Out	I/O	ACKA	ACKA	
PC7	In	Out	I/O	OBFA	OBFA	

Special Mode Combination Considerations

There are several combinations of modes possible. For any combination, some or all of Port C lines are used for control or status. The remaining bits are either inputs or outputs as defined by a “Set Mode” command.

During a read of Port C, the state of all the Port C lines, except the ACK and STB lines, will be placed on the data bus. In place of the ACK and STB line states, flag status will appear on the data bus in the PC2, PC4, and PC6 bit positions as illustrated by Figure 17.

Through a “Write Port C” command, only the Port C pins programmed as outputs in a Mode 0 group can be written. No other pins can be affected by a “Write Port C” command, nor can the interrupt enable flags be accessed. To write to any Port C output programmed as an output in Mode 1 group or to change an interrupt enable flag, the “Set/Reset Port C Bit” command must be used.

With a “Set/Reset Port C Bit” command, any Port C line programmed as an output (including IBF and OBF) can be written, or an interrupt enable flag can be either set or reset. Port C lines programmed as inputs, including ACK and STB lines, associated with Port C are not affected by a “Set/Reset Port C Bit” command. Writing to the corresponding Port C bit positions of the ACK and STB lines with the “Set Reset Port C Bit” command will affect the Group A and Group B interrupt enable flags, as illustrated in Figure 17.

INPUT CONFIGURATION

D7	D6	D5	D4	D3	D2	D1	D0
I/O	I/O	IBFA	INTEA	INTRA	INTEB	IBFB	INTRB
GROUP A					GROUP B		

OUTPUT CONFIGURATION

D7	D6	D5	D4	D3	D2	D1	D0
OBFA	INTEA	I/O	I/O	INTRA	INTEB	OBFB	INTRB
GROUP A					GROUP B		

FIGURE 15. MODE 1 STATUS WORD FORMAT

D7	D6	D5	D4	D3	D2	D1	D0
OBFA	INTE1	IBFA	INTE2	INTRA	X	X	X
GROUP A					GROUP B		

(Defined by Mode 0 or Mode 1 Selection)

FIGURE 16. MODE 2 STATUS WORD FORMAT

Current Drive Capability

Any output on Port A, B or C can sink or source 2.5mA. This feature allows the 82C55A to directly drive Darlington type drivers and high-voltage displays that require such sink or source current.

Reading Port C Status (Figures 15 and 16)

In Mode 0, Port C transfers data to or from the peripheral device. When the 82C55A is programmed to function in Modes 1 or 2, Port C generates or accepts “hand shaking” signals with the peripheral device. Reading the contents of Port C allows the programmer to test or verify the “status” of each peripheral device and change the program flow accordingly.

There is not a special instruction to read the status information from Port C. A normal read operation of Port C is executed to perform this function.

INTERRUPT ENABLE FLAG	POSITION	ALTERNATE PORT C PIN SIGNAL (MODE)
INTE B	PC2	$\overline{ACKB}$ (Output Mode 1) or $\overline{STBB}$ (Input Mode 1)
INTE A2	PC4	$\overline{STBA}$ (Input Mode 1 or Mode 2)
INTE A1	PC6	$\overline{ACKA}$ (Output Mode 1 or Mode 2)

FIGURE 17. INTERRUPT ENABLE FLAGS IN MODES 1 AND 2

Applications of the 82C55A

The 82C55A is a very powerful tool for interfacing peripheral equipment to the microcomputer system. It represents the optimum use of available pins and is flexible enough to interface almost any I/O device without the need for additional external logic.

Each peripheral device in a microcomputer system usually has a “service routine” associated with it. The routine manages the software interface between the device and the CPU. The functional definition of the 82C55A is programmed by the I/O service routine and becomes an extension of the system software. By examining the I/O devices interface characteristics for both data transfer and timing, and matching this information to the examples and tables in the detailed operational description, a control word can easily be developed to initialize the 82C55A to exactly “fit” the application. Figures 18 through 24 present a few examples of typical applications of the 82C55A.

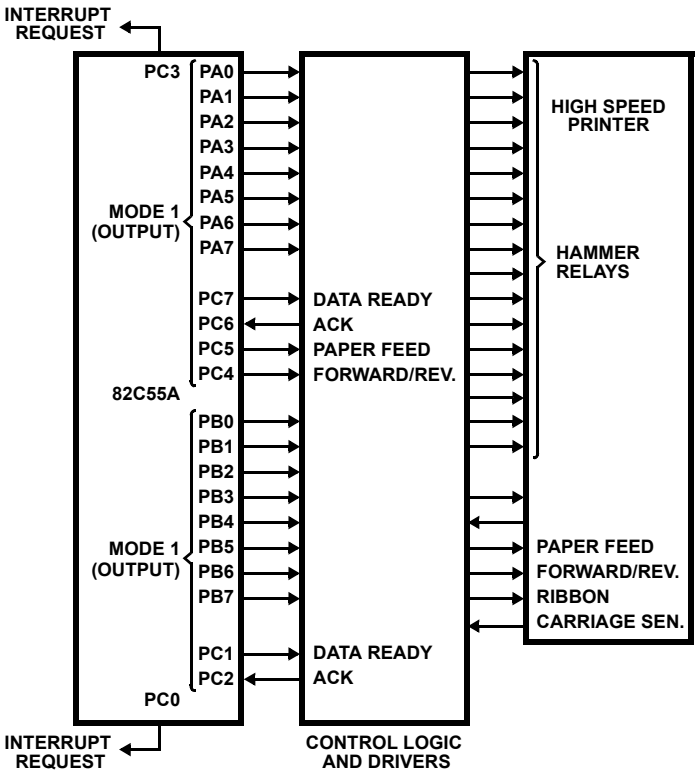

FIGURE 18. PRINTER INTERFACE

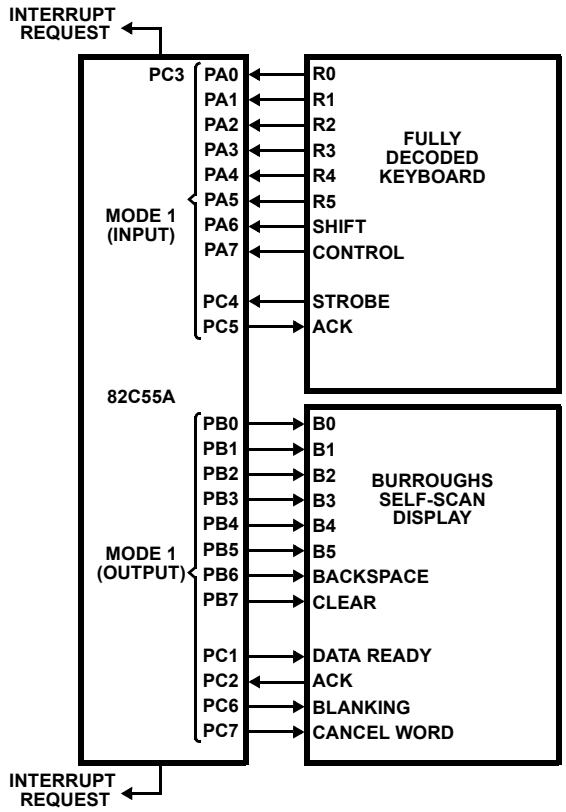

FIGURE 19. KEYBOARD AND DISPLAY INTERFACE

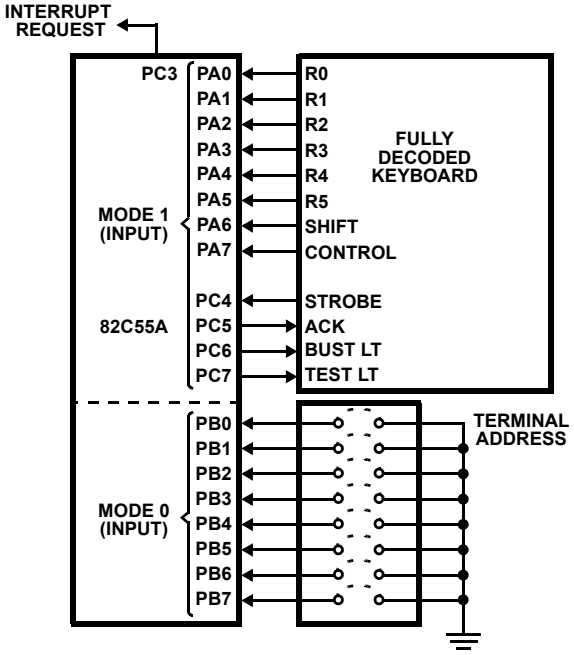

FIGURE 20. KEYBOARD AND TERMINAL ADDRESS INTERFACE

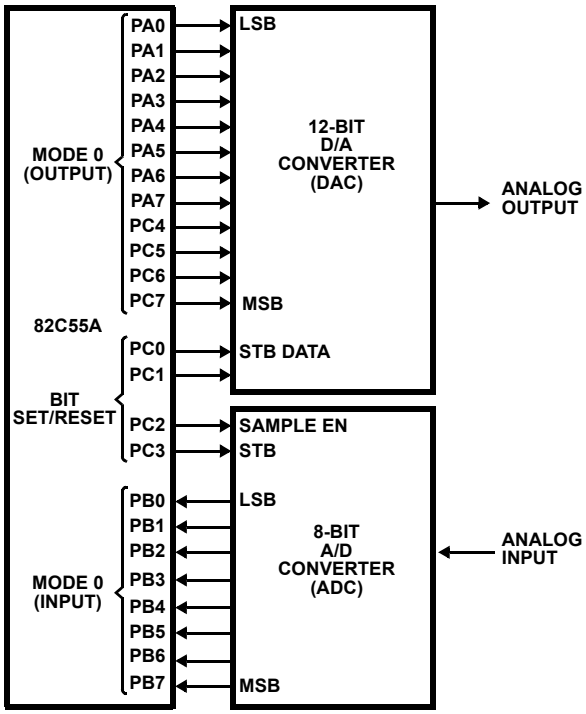

FIGURE 21. DIGITAL TO ANALOG, ANALOG TO DIGITAL

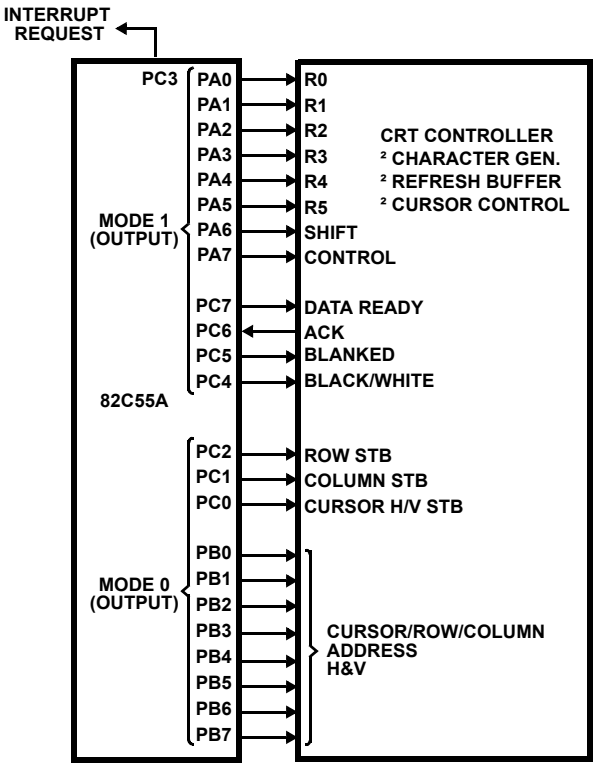

FIGURE 22. BASIC CRT CONTROLLER INTERFACE

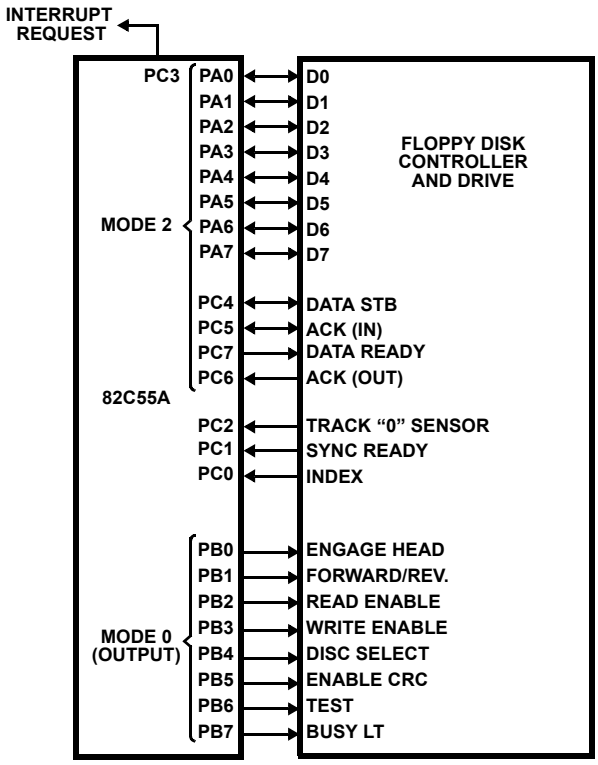

FIGURE 23. BASIC FLOPPY DISC INTERFACE

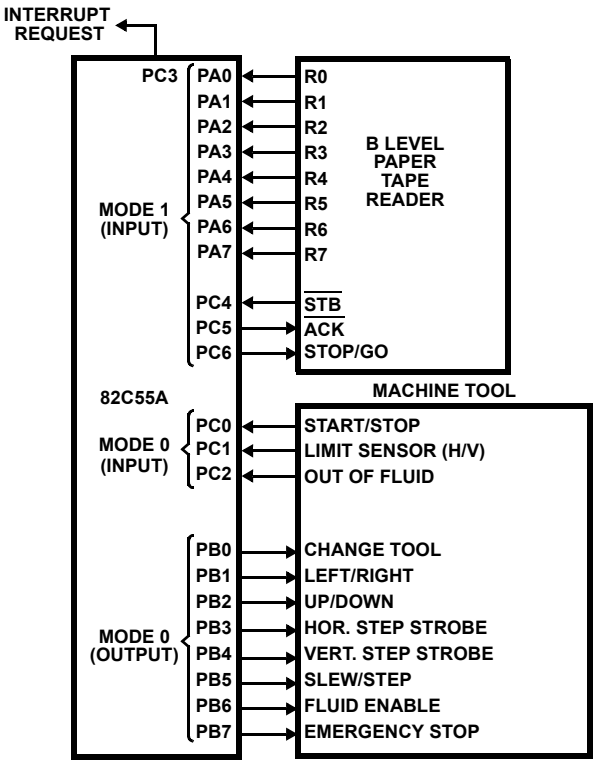

FIGURE 24. MACHINE TOOL CONTROLLER INTERFACE

Absolute Maximum Ratings T_A = 25°C

Supply Voltage . . . . . +8.0V
Input, Output or I/O Voltage . . . . . GND-0.5V to V_{CC}+0.5V
ESD Classification . . . . . Class 1

Operating Conditions

Voltage Range . . . . . +4.5V to 5.5V
Operating Temperature Range
CMX82C55A . . . . . 0°C to 70°C
IMX82C55A . . . . . -40°C to 85°C

Thermal Information

Thermal Resistance (Typical, Note 1)	θ_{JA} (°C/W)
PLCC Package	55
MQFP Package	62
PDIP Package*	50

Maximum Storage Temperature Range . . . . . -65°C to 150°C
Maximum Junction Temperature
Plastic Packages . . . . . 150°C
Maximum Lead Temperature (Soldering 10s) . . . . . 300°C
(Lead Tips Only)

*Pb-free PDIPs can be used for through hole wave solder processing only. They are not intended for use in Reflow solder processing applications.

Die Characteristics

Gate Count . . . . . 1000 Gates

CAUTION: Stresses above those listed in "Absolute Maximum Ratings" may cause permanent damage to the device. This is a stress only rating and operation of the device at these or any other conditions above those indicated in the operational sections of this specification is not implied.

NOTE:

2. θ_{JA} is measured with the component mounted on a high effective thermal conductivity test board in free air. See Tech Brief TB379 for details.

Electrical Specifications V_{CC} = 5.0V± 10%; T_A = Operating Temperature Range

SYMBOL	PARAMETER	TEST CONDITIONS	MIN	TYP	MAX	UNITS
V_{IH}	Logical One Input Voltage		2.0 2.2	-	-	V
V_{IL}	Logical Zero Input Voltage		-	-	0.8	V
V_{OH}	Logical One Output Voltage	I_{OH} = -2.5mA, I_{OH} = -100µA	3.0 V_{CC} -0.4	-	-	V
V_{OL}	Logical Zero Output Voltage	I_{OL} +2.5mA	-	-	0.4	V
I_I	Input Leakage Current	V_{IN} = V_{CC} or GND, $\overline{RD}$, $\overline{CS}$, A1, A0, RESET, WR	-1.0	-	+1.0	µA
IO	I/O Pin Leakage Current	VO = V_{CC} or GND, D0 - D7	-10	-	+10	µA
IDAR	Darlington Drive Current	Ports A, B, C. Test Condition 3	-2.5	-	Notes 2, 4	mA
ICCSB	Standby Power Supply Current	V_{CC} = 5.5V, V_{IN} = V_{CC} or GND. Output Open	-	-	10	µA
ICCOP	Operating Power Supply Current	T_A = +25°C, V_{CC} = 5.0V, Typical (See Note 3)	-	1	-	mA/MHz

NOTES:

3. No internal current limiting exists on Port Outputs. A resistor must be added externally to limit the current.
4. ICCOP = 1mA/MHz of Peripheral Read/Write cycle time. (Example: 1.0µs I/O Read/Write cycle time = 1mA).
5. Tested as V_{OH} at -2.5mA.

Capacitance T_A = 25°C

SYMBOL	PARAMETER	TYPICAL	UNITS	TEST CONDITIONS
CIN	Input Capacitance	10	pF	FREQ = 1MHz, All Measurements are referenced to device GND
CI/O	I/O Capacitance	20	pF	

AC Electrical Specifications

V_{CC} = +5V± 10%, GND = 0V; T_A = Operating Temperature Range

SYMBOL	PARAMETER	TEST CONDITIONS	82C55A		UNITS
			MIN	MAX	
READ TIMING					
(1) tAR	Address Stable Before $\overline{RD}$		0	-	ns
(2) tRA	Address Stable After $\overline{RD}$		0	-	ns
(3) tRR	$\overline{RD}$ Pulse Width		150	-	ns
(4) tRD	Data Valid From $\overline{RD}$	1	-	120	ns
(5) tDF	Data Float After $\overline{RD}$	2	10	75	ns
(6) tRV	Time Between $\overline{RD}$s and/or $\overline{WR}$s		300	-	ns
WRITE TIMING					
(7) tAW	Address Stable Before $\overline{WR}$		0	-	ns
(8) tWA	Address Stable After $\overline{WR}$		20	-	ns
(9) tWW	$\overline{WR}$ Pulse Width		100	-	ns
(10) tDW	Data Valid to $\overline{WR}$ High		100	-	ns
(11) tWD	Data Valid After $\overline{WR}$ High		30	-	ns
OTHER TIMING					
(12) tWB	$\overline{WR}$ = 1 to Output	1	-	350	ns
(13) tIR	Peripheral Data Before $\overline{RD}$		0	-	ns
(14) tHR	Peripheral Data After $\overline{RD}$		0	-	ns
(15) tAK	ACK Pulse Width		200	-	ns
(16) tST	STB Pulse Width		100	-	ns
(17) tPS	Peripheral Data Before STB High		20	-	ns
(18) tPH	Peripheral Data After STB High		50	-	ns
(19) tAD	ACK = 0 to Output	1	-	175	ns
(20) tKD	ACK = 1 to Output Float	2	20	250	ns
(21) tWOB	$\overline{WR}$ = 1 to OBF = 0	1	-	150	ns
(22) tAOB	ACK = 0 to OBF = 1	1	-	150	ns
(23) tSIB	STB = 0 to IBF = 1	1	-	150	ns
(24) tRIB	$\overline{RD}$ = 1 to IBF = 0	1	-	150	ns
(25) tRIT	$\overline{RD}$ = 0 to INTR = 0	1	-	200	ns
(26) tSIT	STB = 1 to INTR = 1	1	-	150	ns
(27) tAIT	ACK = 1 to INTR = 1	1	-	150	ns
(28) tWIT	$\overline{WR}$ = 0 to INTR = 0	1	-	200	ns
(29) tRES	Reset Pulse Width	1, (Note)	500	-	ns

NOTE: Period of initial Reset pulse after power-on must be at least 50µsec. Subsequent Reset pulses may be 500ns minimum.

Timing Waveforms

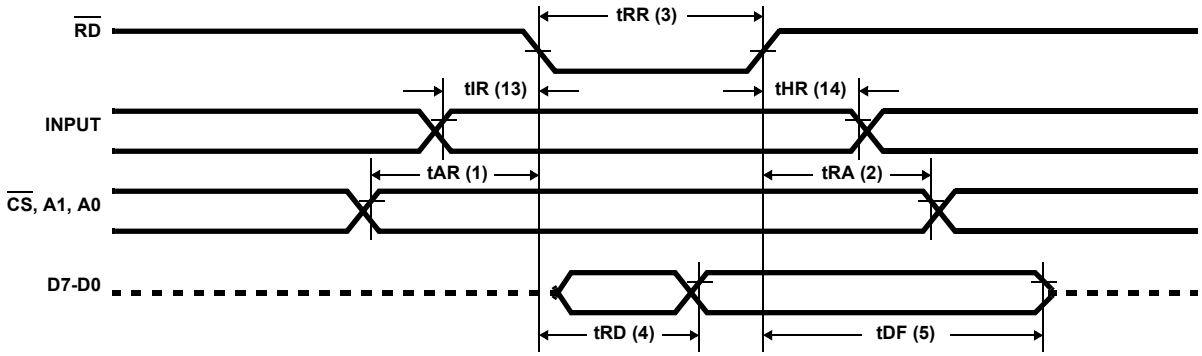

FIGURE 25. MODE 0 (BASIC INPUT)

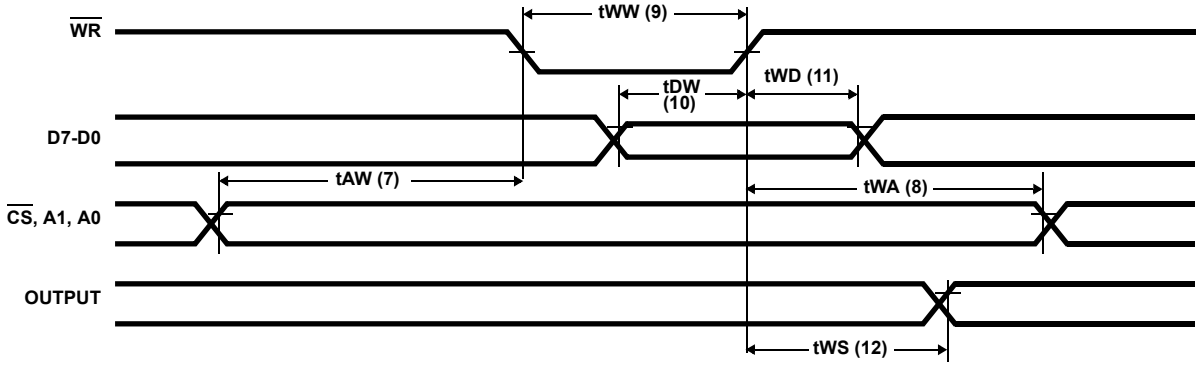

FIGURE 26. MODE 0 (BASIC OUTPUT)

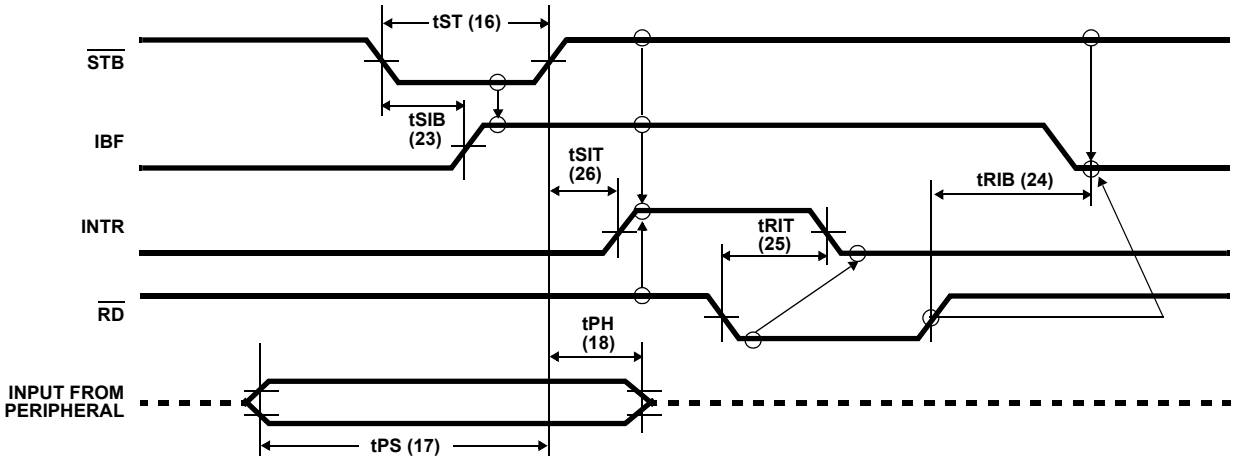

FIGURE 27. MODE 1 (STROBED INPUT)

Timing Waveforms (Continued)

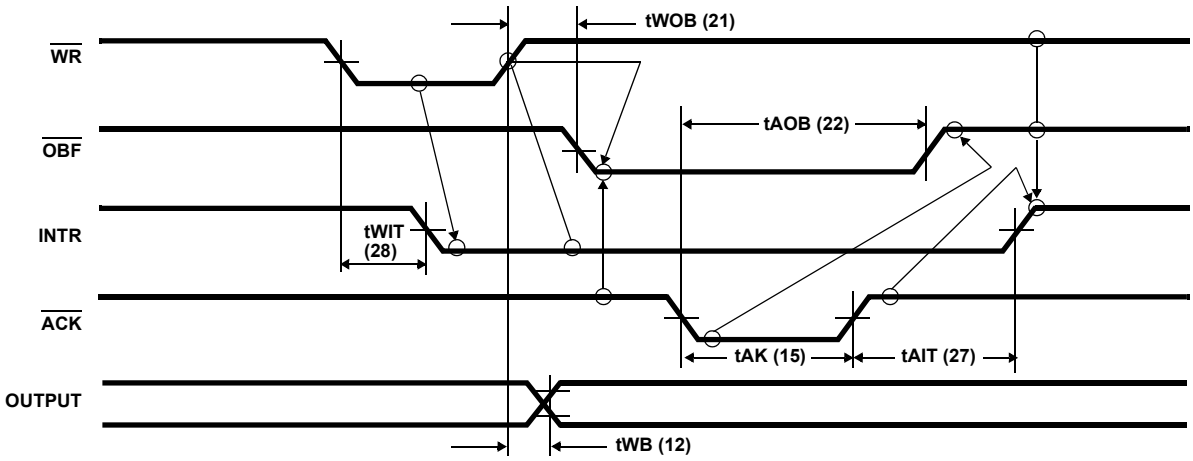

FIGURE 28. MODE 1 (STROBED OUTPUT)

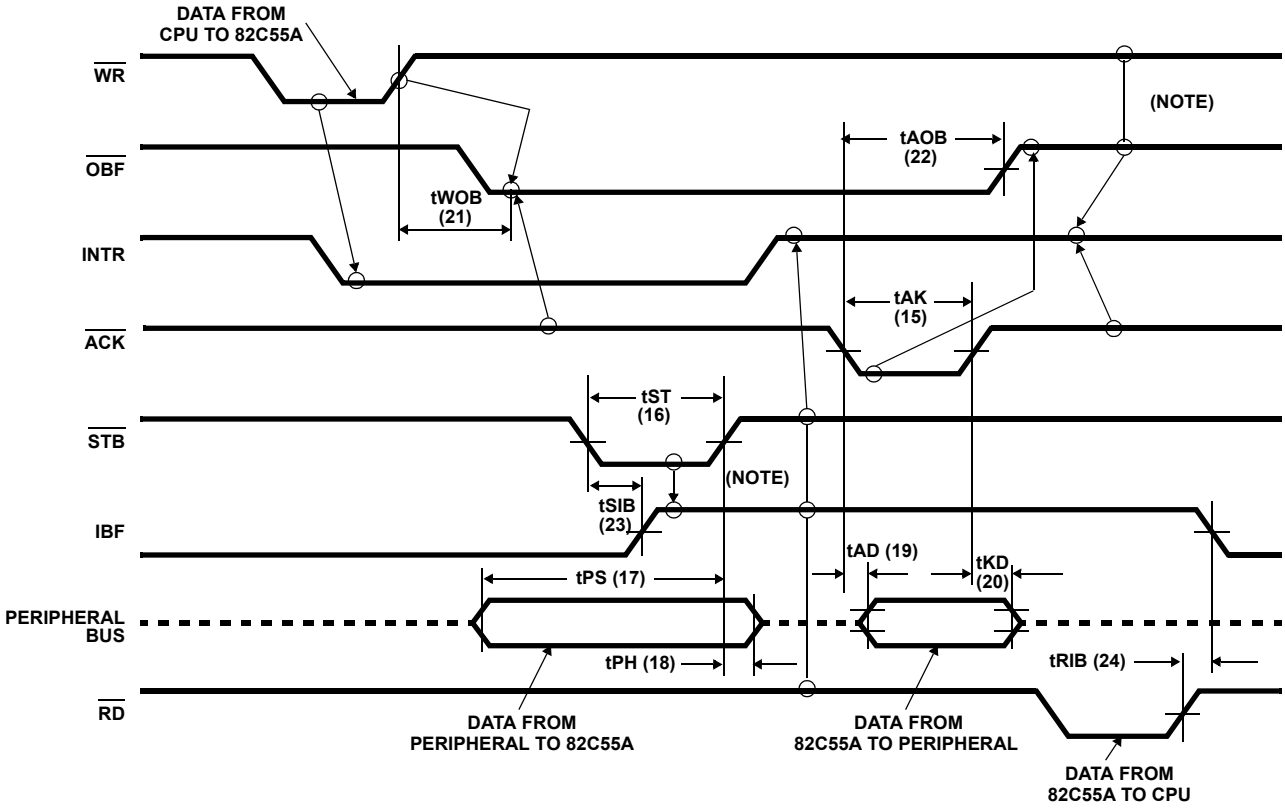

FIGURE 29. MODE 2 (BIDIRECTIONAL)

NOTE: Any sequence where $\overline{WR}$ occurs before $\overline{ACK}$ and $\overline{STB}$ occurs before $\overline{RD}$ is permissible. (INTR = IBF • $\overline{MASK}$ • $\overline{STB}$ • $\overline{RD}$ + $\overline{OBF}$ • $\overline{MASK}$ • $\overline{ACK}$ • $\overline{WR}$)

Timing Waveforms (Continued)

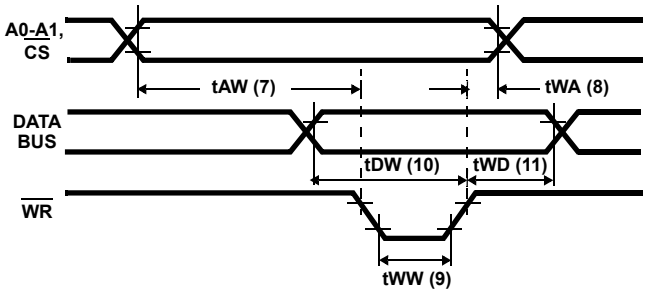

FIGURE 30. WRITE TIMING

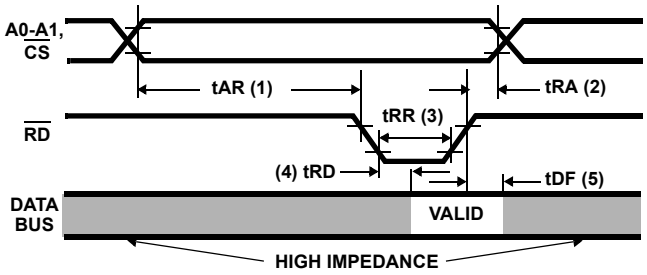

FIGURE 31. READ TIMING

AC Test Circuit

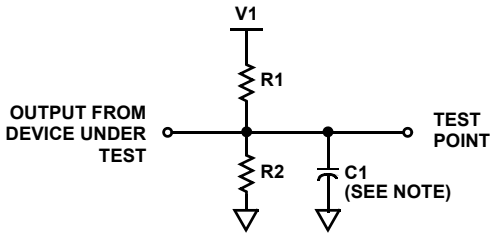

NOTE: Includes STRAY and JIG Capacitance

AC Testing Input, Output Waveforms

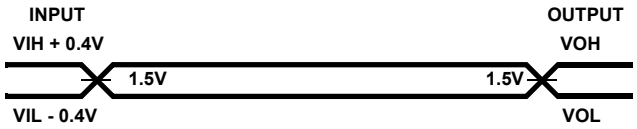

AC Testing: All AC Parameters tested as per test circuits. Input RISE and FALL times are driven at 1ns/V.

TEST CONDITION DEFINITION TABLE

TEST CONDITION	V1	R1	R2	C1
1	1.7V	523Ω	Open	150pF
2	V_{CC}	2kΩ	1.7kΩ	50pF
3	1.5V	750Ω	Open	50pF

Die Characteristics

METALLIZATION:

Type: Silicon - Aluminum
Thickness: 11kÅ ±1kÅ

GLASSIVATION:

Type: SiO_2
Thickness: 8kÅ ±1kÅ

Metallization Mask Layout

82C55A

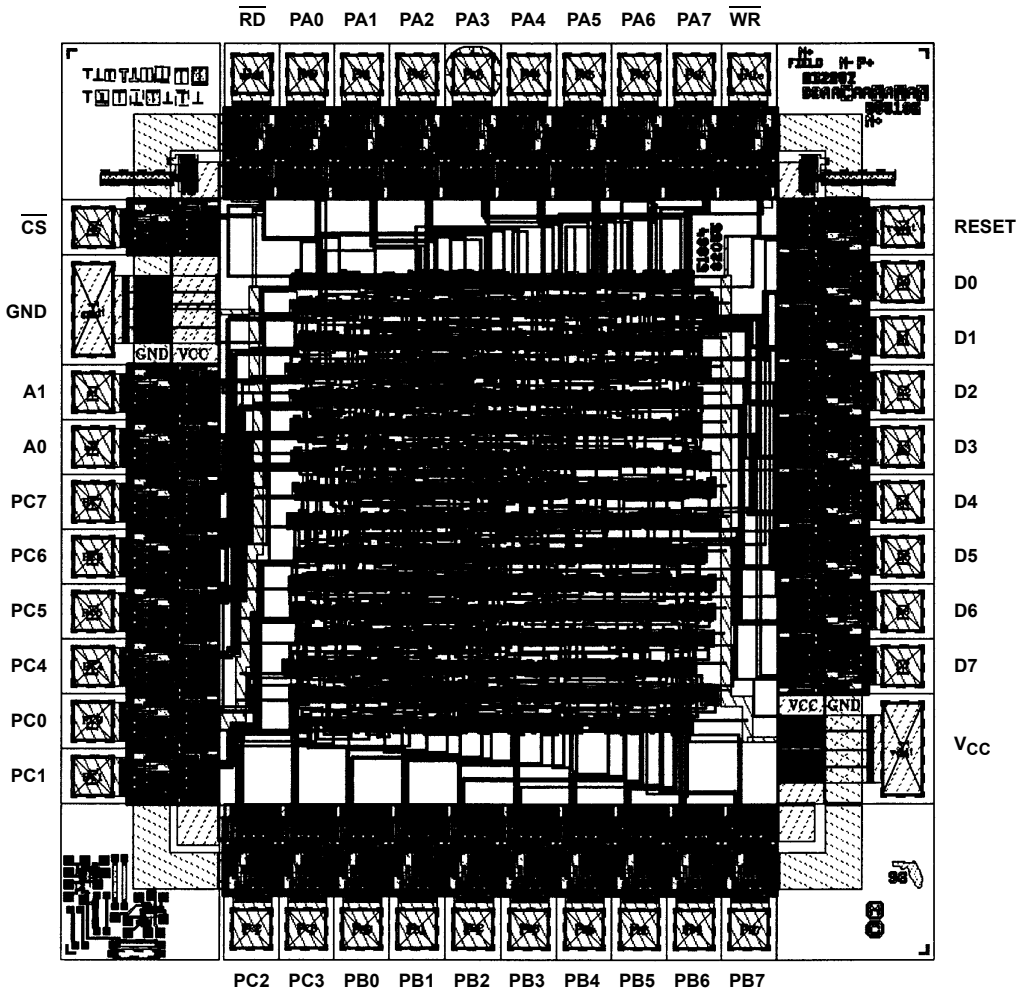

Dual-In-Line Plastic Packages (PDIP)

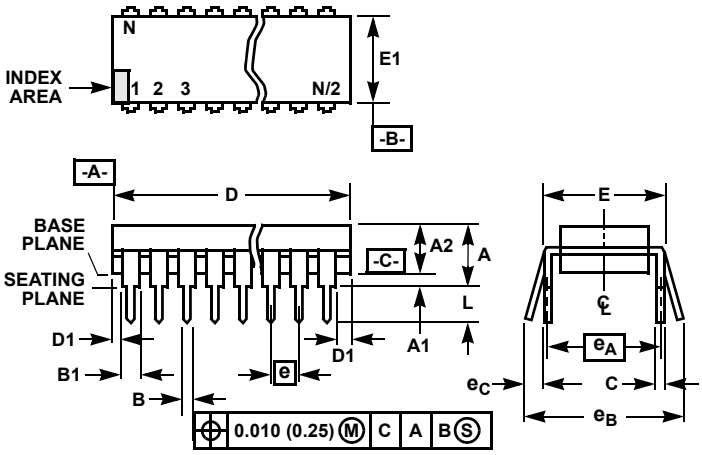

NOTES:

1. Controlling Dimensions: INCH. In case of conflict between English and Metric dimensions, the inch dimensions control.
2. Dimensioning and tolerancing per ANSI Y14.5M-1982.
3. Symbols are defined in the “MO Series Symbol List” in Section 2.2 of Publication No. 95.
4. Dimensions A, A1 and L are measured with the package seated in JEDEC seating plane gauge GS-3.
5. D, D1, and E1 dimensions do not include mold flash or protrusions. Mold flash or protrusions shall not exceed 0.010 inch (0.25mm).
6. E and e_A are measured with the leads constrained to be perpendicular to datum -C-.
7. e_B and e_C are measured at the lead tips with the leads unconstrained. e_C must be zero or greater.
8. B1 maximum dimensions do not include dambar protrusions. Dambar protrusions shall not exceed 0.010 inch (0.25mm).
9. N is the maximum number of terminal positions.
10. Corner leads (1, N, N/2 and N/2 + 1) for E8.3, E16.3, E18.3, E28.3, E42.6 will have a B1 dimension of 0.030 - 0.045 inch (0.76 - 1.14mm).

E40.6 **(JEDEC MS-011-AC ISSUE B)**
40 LEAD DUAL-IN-LINE PLASTIC PACKAGE

SYMBOL	INCHES		MILLIMETERS		NOTES
	MIN	MAX	MIN	MAX	
A	-	0.250	-	6.35	4
A1	0.015	-	0.39	-	4
A2	0.125	0.195	3.18	4.95	-
B	0.014	0.022	0.356	0.558	-
B1	0.030	0.070	0.77	1.77	8
C	0.008	0.015	0.204	0.381	-
D	1.980	2.095	50.3	53.2	5
D1	0.005	-	0.13	-	5
E	0.600	0.625	15.24	15.87	6
E1	0.485	0.580	12.32	14.73	5
e	0.100 BSC		2.54 BSC		-
e_A	0.600 BSC		15.24 BSC		6
e_B	-	0.700	-	17.78	7
L	0.115	0.200	2.93	5.08	4
N	40		40		9

Rev. 0 12/93

Plastic Leaded Chip Carrier Packages (PLCC)

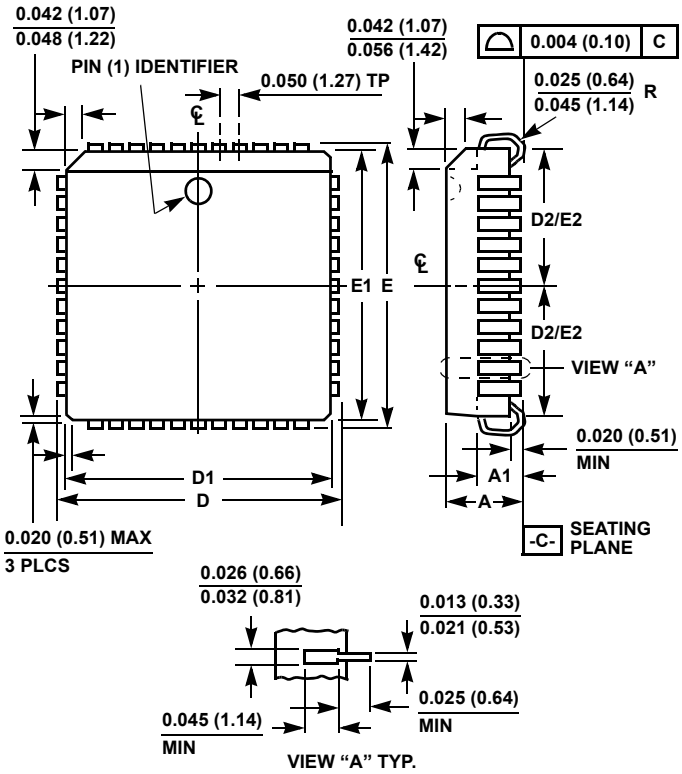

N44.65 **(JEDEC MS-018AC ISSUE A)**
44 LEAD PLASTIC LEADED CHIP CARRIER PACKAGE

SYMBOL	INCHES		MILLIMETERS		NOTES
	MIN	MAX	MIN	MAX	
A	0.165	0.180	4.20	4.57	-
A1	0.090	0.120	2.29	3.04	-
D	0.685	0.695	17.40	17.65	-
D1	0.650	0.656	16.51	16.66	3
D2	0.291	0.319	7.40	8.10	4, 5
E	0.685	0.695	17.40	17.65	-
E1	0.650	0.656	16.51	16.66	3
E2	0.291	0.319	7.40	8.10	4, 5
N	44		44		6

Rev. 2 11/97

NOTES:

1. Controlling dimension: INCH. Converted millimeter dimensions are not necessarily exact.
2. Dimensions and tolerancing per ANSI Y14.5M-1982.
3. Dimensions D1 and E1 do not include mold protrusions. Allowable mold protrusion is 0.010 inch (0.25mm) per side. Dimensions D1 and E1 include mold mismatch and are measured at the extreme material condition at the body parting line.
4. To be measured at seating plane -C- contact point.
5. Centerline to be determined where center leads exit plastic body.
6. "N" is the number of terminal positions.

Metric Plastic Quad Flatpack Packages (MQFP)

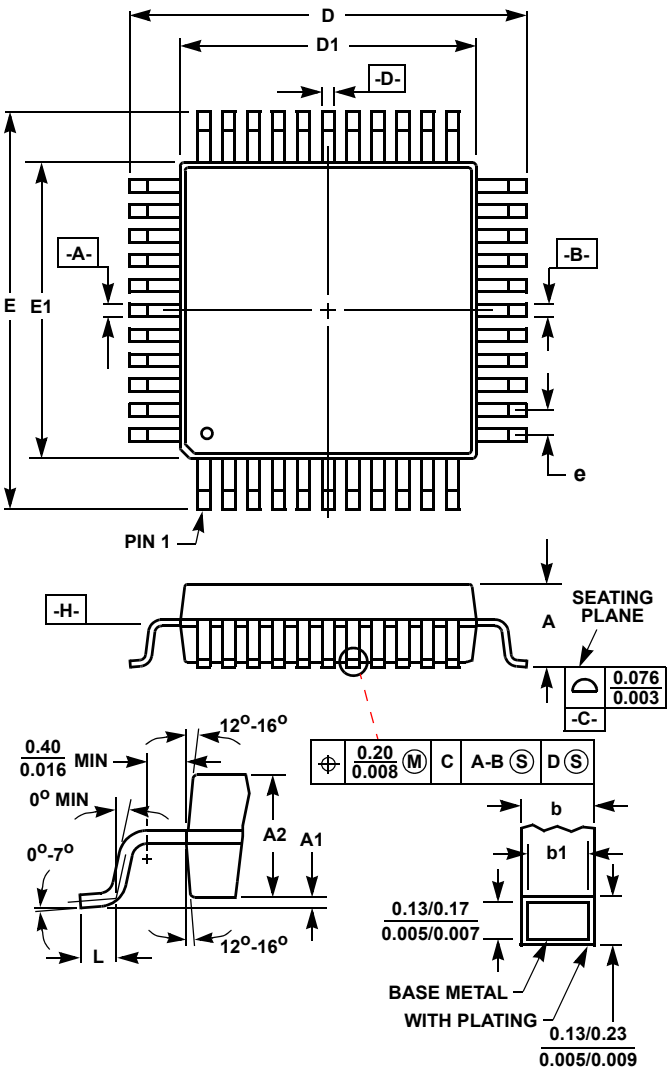

Q44.10x10 (JEDEC MS-022AB ISSUE B)
44 LEAD METRIC PLASTIC QUAD FLATPACK PACKAGE

SYMBOL	INCHES		MILLIMETERS		NOTES
	MIN	MAX	MIN	MAX	
A	-	0.096	-	2.45	-
A1	0.004	0.010	0.10	0.25	-
A2	0.077	0.083	1.95	2.10	-
b	0.012	0.018	0.30	0.45	6
b1	0.012	0.016	0.30	0.40	-
D	0.515	0.524	13.08	13.32	3
D1	0.389	0.399	9.88	10.12	4, 5
E	0.516	0.523	13.10	13.30	3
E1	0.390	0.398	9.90	10.10	4, 5
L	0.029	0.040	0.73	1.03	-
N	44		44		7
e	0.032 BSC		0.80 BSC		-

Rev. 2 4/99

NOTES:

1. Controlling dimension: MILLIMETER. Converted inch dimensions are not necessarily exact.
2. All dimensions and tolerances per ANSI Y14.5M-1982.
3. Dimensions D and E to be determined at seating plane -C-.
4. Dimensions D1 and E1 to be determined at datum plane -H-.
5. Dimensions D1 and E1 do not include mold protrusion. Allowable protrusion is 0.25mm (0.010 inch) per side.
6. Dimension b does not include dambar protrusion. Allowable dambar protrusion shall be 0.08mm (0.003 inch) total.
7. “N” is the number of terminal positions.

© Copyright Intersil Americas LLC 2005-2006. All Rights Reserved.
All trademarks and registered trademarks are the property of their respective owners.

For additional products, see www.intersil.com/en/products.html

Intersil products are manufactured, assembled and tested utilizing ISO9001 quality systems as noted in the quality certifications found at www.intersil.com/en/support/qualandreliability.html

Intersil products are sold by description only. Intersil may modify the circuit design and/or specifications of products at any time without notice, provided that such modification does not, in Intersil's sole judgment, affect the form, fit or function of the product. Accordingly, the reader is cautioned to verify that datasheets are current before placing orders. Information furnished by Intersil is believed to be accurate and reliable. However, no responsibility is assumed by Intersil or its subsidiaries for its use; nor for any infringements of patents or other rights of third parties which may result from its use. No license is granted by implication or otherwise under any patent or patent rights of Intersil or its subsidiaries.

For information regarding Intersil Corporation and its products, see www.intersil.com