MAX1460 Low-Power, 16-Bit Smart ADC

General Description

The MAX1460 implements a revolutionary concept in signal conditioning, where the output of its 16-bit analog- to-digital converter (ADC) is digitally corrected over the specified temperature range. This feature can be readily exploited by industrial and medical market segments, in applications such as sensors and smart batteries. Digital correction is provided by an internal digital signal processor (DSP) and on-chip 128-bit EEPROM containing user-programmed calibration coefficients. The conditioned output is available as a 12-bit digital word and as a ratiometric (proportional to the supply voltage) analog voltage using an on-board 12-bit digital-to-analog converter (DAC). The uncommitted op amp can be used to filter the analog output, or implement a 2-wire, 4–20mA transmitter.

The analog front end includes a 2-bit programmablegain amplifier (PGA) and a 3-bit coarse-offset (CO) DAC, which condition the sensor's output. This coarsely corrected signal is digitized by a 16-bit ADC. The DSP uses the digitized sensor signal, the temperature sensor, and correction coefficients stored in the internal EEPROM to produce the conditioned output.

Multiple or batch manufacturing of sensors is supported with a completely digital test interface. Built-in testability features on the MAX1460 result in the integration of three traditional sensor-manufacturing operations into one automated process:

- Pretest: Data acquisition of sensor performance under the control of a host test computer.
- Calibration and Compensation: Computation and storage of calibration and compensation coefficients determined from transducer pretest data.
- Final Test Operation: Verification of transducer calibration and compensation, without removal from the pretest socket.

The MAX1460 evaluation kit (EV kit) allows fast evaluation and prototyping, using a piezoresistive transducer (PRT) and a Windows®-based PC. The user-friendly EV kit simplifies small-volume prototyping; it is not necessary to fully understand the test-system interface, the calibration algorithm, or many other details to evaluate the MAX1460 with a particular sensor. Simply plug the PRT into the EV kit, plug the EV kit into a PC parallel port, connect the sensor to an excitation source (such as a pressure controller), and run the MAX1460 EV kit software. An oven is required for thermal compensation

Functional Diagram appears at end of data sheet.

Pin Configuration appears at end of data sheet.

Windows is a registered trademark of Microsoft Corp.

Features

- Low-Noise, 400µA Single-Chip Sensor Signal Conditioning
- High-Precision Front End Resolves Less than 1µV of Differential Input Signal
- On-Chip DSP and EEPROM Provide Digital Correction of Sensor Errors
- 16-Bit Signal Path Compensates Sensor Offset and Sensitivity and Associated Temperature Coefficients
- 12-Bit Parallel Digital Output
- Analog Output
- Compensates a Wide Range of Sensor Sensitivity and Offset
- Single-Shot Automated Compensation Algorithm—No Iteration Required
- Built-In Temperature Sensor
- Three-State, 5-Wire Serial Interface Supports High-Volume Manufacturing

Applications

- Hand-Held Instruments
- Piezoresistive Pressure and Acceleration Transducers and Transmitters
- Industrial Pressure Sensors and 4–20mA Transmitters
- Smart Battery Charge Systems
- Weigh Scales and Strain-Gauge Measurement
- Flow Meters
- Dive Computers and Liquid-Level Sensing
- Hydraulic Systems

Ordering Information

PART	TEMP RANGE	PIN-PACKAGE
MAX1460CCM	0°C to +70°C	48 TQFP

Customization

Maxim can customize the MAX1460 for unique requirements. With a dedicated cell library of more than 90 sensor- specific functional blocks, Maxim can quickly provide customized MAX1460 solutions, including customized microcode for unusual sensor characteristics. Contact Maxim for further information.

19-4784; Rev 1; 5/14

maxim integrated™

Absolute Maximum Ratings

Supply Voltage, V_{DD} to V_{SS} ..... -0.3V to +6V
All Other Pins ..... (V_{SS} - 0.3V) to (V_{DD} + 0.3V)
Short-Circuit Duration, All Outputs ..... Continuous
Continuous Power Dissipation (T_A = +70°C)
48-Pin TQFP (derate 12.5mW/°C above +70°C) 1000mW

Operating Temperature Range ..... 0°C to +70°C
Storage Temperature Range ..... -65°C to +160°C
Lead Temperature (soldering, 10sec) ..... +300°C

Stresses beyond those listed under "Absolute Maximum Ratings" may cause permanent damage to the device. These are stress ratings only, and functional operation of the device at these or any other conditions beyond those indicated in the operational sections of the specifications is not implied. Exposure to absolute maximum rating conditions for extended periods may affect device reliability.

Electrical Characteristics

(V_{DD} = +5V, V_{SS} = 0, f_{XIN} = 2MHz, T_A = T_{MIN} to T_{MAX}, unless otherwise noted.)

PARAMETER	SYMBOL	CONDITIONS	MIN	TYP	MAX	UNITS
GENERAL CHARACTERISTICS						
Supply Voltage (Note 1)	V_{DD}	During operation	4.75	5.0	5.25	V
Supply Current (Note 2)	I_{DD}	Continuous conversion		400	700	µA
Throughput Rate				15		Hz
ANALOG INPUT						
Input Impedance	R_{IN}			1.0		MΩ
Gain Temperature Coefficient (TC)				±40		ppm/°C
Input-Referred Offset TC				±1200		nV/°C
Common-Mode Rejection Ratio	CMRR	From V_{SS} to V_{DD}		90		dB
PGA AND COARSE-OFFSET DAC (Notes 3, 4)						
PGA Gain		PGA gain code = 00	43	46	49	V/V
		PGA gain code = 01	59	61	64	
		PGA gain code = 10	74	77	80	
		PGA gain code = 11	90	93	96	
Coarse Offset		CO-DAC code = 111	-164	-149	-134	% V_{DD}
		CO-DAC code = 110	-111	-96	-81	
		CO-DAC code = 101	-62	-47	-32	
		CO-DAC code = 100	-10	5	20	
		CO-DAC code = 000	-20	-5	10	
		CO-DAC code = 001	32	47	62	
		CO-DAC code = 010	81	96	111	
		CO-DAC code = 011	134	149	164	
ADC (Notes 3, 4)						
Resolution				16		Bits
Integral Nonlinearity (Note 5)	INL	PGA gain code = 00, CO-DAC code = 000		0.006		%
Input-Referred Noise				1700		nV_{RMS}
Output-Referred Noise		5kΩ input impedance		2		LSB_{RMS}
TEMPERATURE SENSOR (Note 6)						
Resolution				260		LSB/°C
Linearity		T_A = 0°C to +70°C		1.3		°C

Electrical Characteristics (continued)

(V_{DD} = +5V, V_{SS} = 0, f_{XIN} = 2MHz, T_A = T_{MIN} to T_{MAX}, unless otherwise noted.)

PARAMETER	SYMBOL	CONDITIONS	MIN	TYP	MAX	UNITS
OUTPUT DAC (Note 7)						
DAC Resolution				12		bits
Integral Nonlinearity	INL			1		LSB
Differential Nonlinearity	DNL			0.5		LSB
UNCOMMITTED OP AMP						
Op Amp Supply Current				100		µA
Input Common-Mode Range	CMR		V_{SS} + 1.3		V_{DD} - 1.0	V
Open-Loop Gain	A_V			60		dB
Offset Voltage (as unity-gain follower)	V_{OS}	V_{IN} = 2.5V (no load)	-30		+30	mV
Output Voltage Swing		No load	V_{SS} + 0.05		V_{DD} - 0.05	V
Output Current Range		V_{OUT} = (V_{SS} + 0.2V) to (V_{DD} - 0.2V)		±500		µA
DIGITAL INPUTS: START, CS1, CS2, SDIO (Note 8)**, RESET, XIN** (Note 9)**, TEST**						
Input High Voltage	V_{IH}		4.0			V
Input Low Voltage	V_{IL}				1.0	V
Input Hysteresis	V_{HYST}			1.0		V
Input Leakage	I_{IN}	V_{IN} = 0 or V_{DD}			±10	µA
Input Capacitance	C_{IN}	(Note 10)			50.0	pF
DIGITAL OUTPUTS: D[11...0]						
Output Voltage Low	V_{OL}	I_{SINK} = 500µA			0.5	V
Output Voltage High	V_{OH}	I_{SOURCE} = 500µA	4.5			V
Three-State Leakage Current	I_L	CS = 0			±10	µA
Three-State Output Capacitance	C_{OUT}	CS = 0 (Note 10)			50.0	pF
DIGITAL OUTPUTS: SDIO (Note 8)**, SDO, EOC, OUT**						
Output Voltage Low	V_{OL}	I_{SINK} = 500µA		0.3		V
Output Voltage High	V_{OH}	I_{SOURCE} = 500µA		4.7		V
Three-State Leakage Current	I_L	CS = 0		±10		µA
Three-State Output Capacitance	C_{OUT}	CS = 0 (Note 10)			50.0	pF

Note 1: EEPROM programming requires a minimum V_{DD} = 4.75V. I_{DD} may exceed its limits during this time.

Note 2: This value does not include the sensor or load current. This value does include the uncommitted op amp current. Note that the MAX1460 will convert continuously if REPEAT MODE is set in the EEPROM.

Note 3: See the *Analog Front-End, including PGA, Coarse Offset DAC, ADC, and Temperature Sensor* sections.

Note 4: The signal input to the ADC is the output of the PGA plus the output of the CO-DAC. The reference to the ADC is V_{DD}. The plus full-scale input to the ADC is +V_{DD} and the minus full-scale input to the ADC is -V_{DD}. This specification shows the contribution of the CO-DAC to the ADC input.

Note 5: See Figure 2 for ADC outputs between +0.8500 to -0.8500.

Note 6: The sensor and the MAX1460 must always be at the same temperature during calibration and use.

Note 7: The Output DAC is specified using the external lowpass filter (Figure 8).

Note 8: SDIO is an input/output digital pin. It is only enabled as a digital output pin when the MAX1460 receives from the test system the commands 8 hex or A hex (Table 4).

Note 9: XIN is a digital input pin only when the TEST pin is high.

Note 10: Guaranteed by design. Not subject to production testing.

Pin Description

PIN	NAME	FUNCTION
1, 2, 12, 13, 18, 19, 31, 32, 36, 41–45	N.C.	No Connection. Not internally connected.
3	AGND	Analog Ground. Connect to VDD and VSS using 10kΩ resistors (see *Functional Diagram*).
4	START	Optional conversion start input signal, used for extending sensor warm-up time. Internally pulled to V_{DD} with a 1MΩ (typical) resistor.
5	I.C.	Internally Connected. Leave unconnected.
6	D6	Parallel Digital Output - bit 6
7	D7	Parallel Digital Output - bit 7
8	D8	Parallel Digital Output - bit 8
9	D9	Parallel Digital Output - bit 9
10	D10	Parallel Digital Output - bit 10
11	D11	Parallel Digital Output - bit 11 (MSB)
14, 37, 38	V_{DD}	Positive Supply Voltage Input. Connect a 0.1µF bypass capacitor from V_{DD} to V_{SS}. Pins 14, 37, and 38 must all be connected to the positive power supply on the PCB.
15	V_{SS}	Negative Supply Input
16,17	CS1, CS2	Chip-Select Input. The MAX1460 is selected when CS1 and CS2 are both high. When either CS1 or CS2 is low, all digital outputs are high impedance and all digital inputs are ignored. CS1 and CS2 are internally pulled high to V_{DD} with a 1MΩ (typical) resistor.
20	SDIO	Serial Data Input/Output. Used only during programming/testing, when the TEST pin is high. The test system sends commands to the MAX1460 through SDIO. The MAX1460 returns the current instruction ROM address and data being executed by the DSP to the test system. SDIO is internally pulled to VSS with a 1MΩ (typical) resistor. SDIO goes high impedance when either CS1 or CS2 is low and remains in this state until the test system initiates conversion.
21	SDO	Serial Data Output. Used only during programming/testing. SDO allows the test system to monitor the DSP registers. The MAX1460 returns to the test system results of the DSP current instruction. SDO is high impedance when TEST is low.
22	$\overline{\text{RESET}}$	Reset Input. When TEST is high, a low-to-high transition on $\overline{\text{RESET}}$ enables the MAX1460 to accept commands from the test system. This input is ignored when TEST is low. Internally pulled high to V_{DD} with a 1MΩ (typical) resistor.
23	EOC	End of Conversion Output. A high-to-low transition of the EOC pulse can be used to latch the Parallel Digital Output (pins D[11...0]).
24	D0	Parallel Digital Output - bit 0 (LSB)
25	D1	Parallel Digital Output - bit 1
26	D2	Parallel Digital Output - bit 2

Pin Description (continued)

PIN	NAME	FUNCTION
27	D3	Parallel Digital Output - bit 3
28	D4	Parallel Digital Output - bit 4
28	D5	Parallel Digital Output - bit 5
30	OUT	Output DAC. The bitstream on OUT, when externally filtered, creates a ratiometric analog output voltage. OUT is proportional to the 12-bit parallel digital output.
33	AMPOUT	General-Purpose Operational Amplifier Output
34	AMP+	Noninverting Input of General-Purpose Operational Amplifier
35	AMP-	Inverting Input of General-Purpose Operational Amplifier
39	XOUT	Internal Oscillator Output. Connect a 2MHz ceramic resonator (Murata CST200) or crystal from XOUT to XIN.
40	XIN	Internal Oscillator Input. When TEST is high, this pin must be driven by the test system with a 2MHz, 50% duty cycle clock signal. The resonator does not need to be disconnected in test mode.
46	INP	Positive Sensor Input. Input impedance is typically > 1MΩ. Rail-to-Rail® input range.
47	TEST	Test/Program Mode Enable Input. When high, enables the MAX1460 programming/testing operations. Internally pulled to V_{SS} with a 1MΩ (typical) resistor.
48	INM	Negative Sensor Input. Input impedance is typically > 1MΩ. Rail-to-rail input range.

Rail-to-Rail is a registered trademark of Nippon Motorola, Ltd.

Detailed Description

The main functions of the MAX1460 include:

- Analog Front End: Includes PGA, coarse-offset DAC, ADC, and temperature sensor
- Test System Interface: Writes calibration coefficients to the DSP registers and EEPROM
- Test System Interface: observes the DSP operation.

The sensor signal enters the MAX1460 and is adjusted for coarse gain and offset by the analog front end. Five bits in the configuration register set the coarse-offset DAC and the coarse gain of the PGA (Tables 1 and 2). These bits must be properly configured for the optimum dynamic range of the ADC. The digitized sensor signal is stored in a read-only DSP register.

The on-chip temperature sensor also has a 3-bit coarse-offset DAC that places the temperature signal in the ADC operating range. Digitized temperature is also stored in a read-only DSP register. The DSP uses the digitized sensor, the temperature signals, and the correction coefficients to calculate the compensated and corrected output.

The MAX1460 supports an automated production environment, where a test system communicates with a batch of MAX1460s and controls temperature and sensor excitation. The three-state digital outputs on the MAX1460 allow parallel connection of transducers, so that all five serial interface lines (XIN, TEST, $\overline{\text{RESET}}$, SDIO, and SDO) can be shared. The test system selects an individual transducer using CS1 and CS2. The test system must vary the sensor's input and temperature, calculate the correction coefficients for each unit, load the coefficients into the MAX1460 nonvolatile EEPROM, and test the resulting compensation.

The MAX1460 DSP implements the following characteristic equation:

$$D = \text{Gain}\left(1 + G_1T + G_2T_2\right)$$
$$\left(\text{Signal} + Of_0 + Of_1T + Of_2T^2\right) + D_{OFF}$$

where Gain corrects the sensor's sensitivity, G1 and G2 correct for Gain-TC, T and Signal are the digitized outputs of the analog front end, Of_0 corrects the sensor's offset, Of_1 and Of_2 correct the Offset-TC, and D_{OFF} is the output offset pedestal.

The test system can write the calibration coefficients into the MAX1460 EEPROM or write to the DSP registers directly. The MAX1460 can begin a conversion using either the EEPROM contents or the register contents. When the test system issues commands, the MAX1460 is a serially controlled slave device.

The test system observes the MAX1460 DSP operation in order to acquire the temperature and signal ADC results, to verify the calibration coefficients, and to get the output D. The MAX1460 places the contents of several important DSP registers on the serial interface after the tester issues a Start Conversion command.

After calibration, compensation, and final test, the MAX1460 is adapted to its sensor and the pair can be removed from the test system. Use the resulting trans-

Table 1. Nominal PGA Gain Settings

PGA SETTING	PGA-1	PGA-0	NOMINAL GAIN (V/V)
0	0	0	46
1	0	1	61
2	1	0	77
3	0	1	93

Table 2. Typical Coarse Offset DAC Settings

CO SETTING	CO-S	CO-1	CO-0	% V_{DD} (at ADC input)	PGA SETTING 0 (mV RTI) (V_{DD} = 5V)	PGA SETTING 1 (mV RTI) (V_{DD} = 5V)	PGA SETTING 2 (mV RTI) (V_{DD} = 5V)	PGA SETTING 3 (mV RTI) (V_{DD} = 5V)
-3	1	1	1	-149	-162	-122	-97	-80
-2	1	1	0	-96	-104	-79	-62	-52
-1	1	0	1	-47	-51	-39	-31	-25
-0	1	0	0	5	5	4	3	3
+0	0	0	0	-5	-5	-4	-3	-3
+1	0	0	1	47	51	39	31	25
+2	0	1	0	96	104	79	62	52
+3	0	1	1	149	162	122	97	80

ducer by applying power and the START signal. Latch the 12-bit parallel digital output using the EOC pulse. The maximum conversion rate of the MAX1460 is 15Hz, using a 2MHz resonator. If an analog output is desired, build a simple lowpass filter using the OUT pin, the uncommitted op amp, and a few discrete components (Figure 8).

Analog Front End, Including PGA, Coarse Offset DAC, ADC, and Temperature Sensor

Before the sensor signal is digitized, it must be gained and coarse-offset corrected to maximize the ADC dynamic range. There are 2 bits (four possible settings) in the configuration register for the PGA gain, and 3 bits (eight possible settings) for the CO DAC. The flowchart (Figure 1) shows a procedure for finding the optimum analog

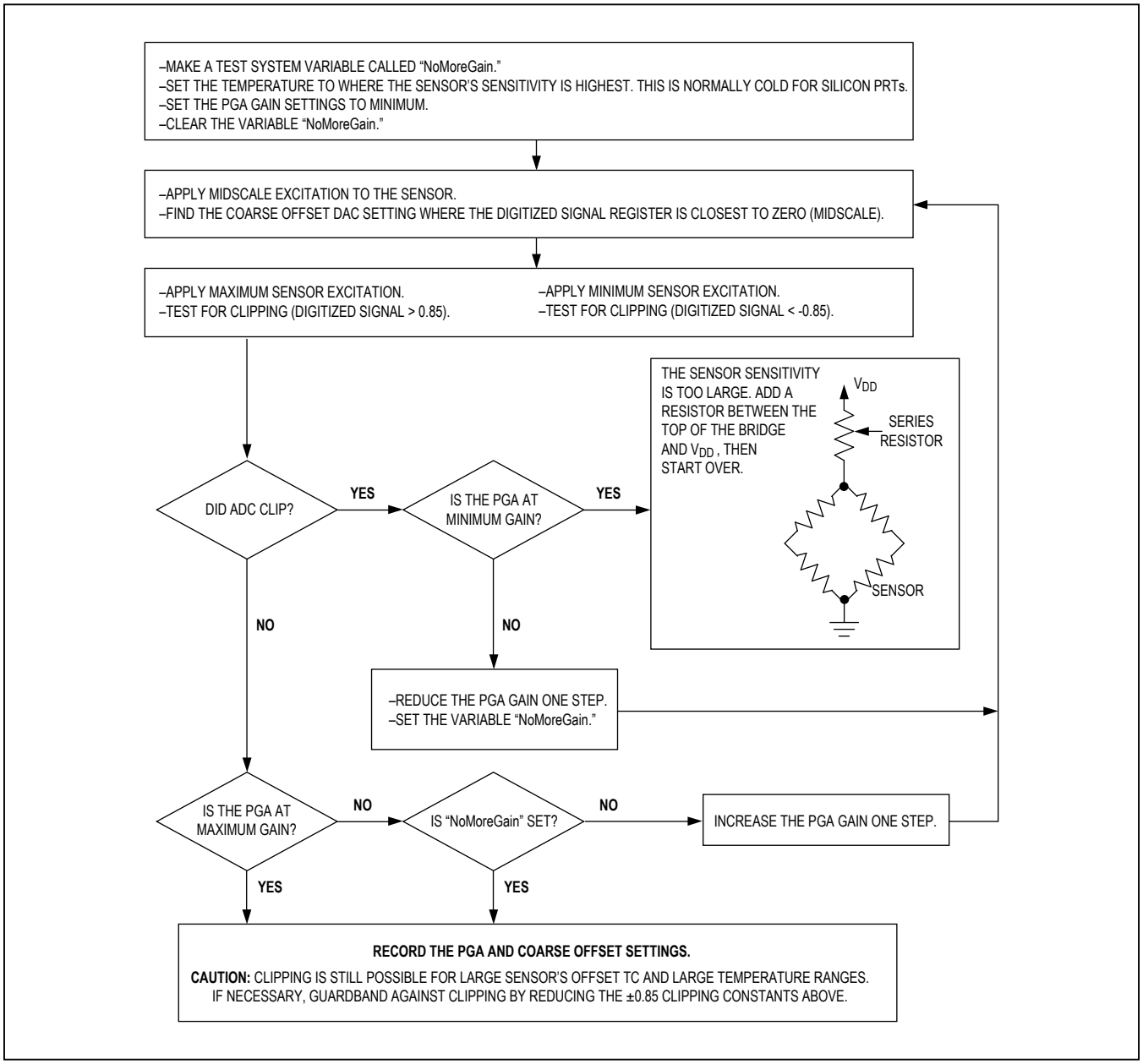

Figure 1. Flowchart for Determining PGA and CO Settings

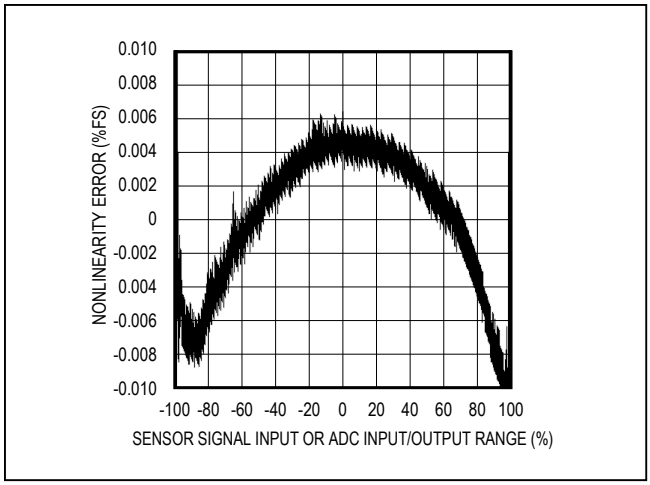

Figure 2a. Analog Front-End INL (typical)

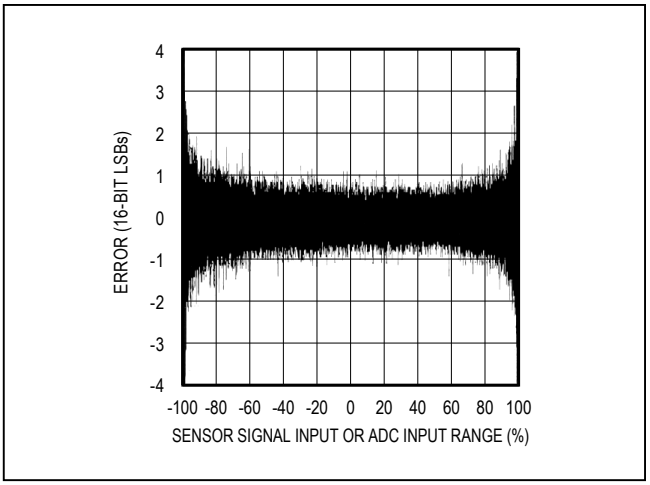

Figure 2b. Analog Front-End Differential Nonlinearity (DNL) (typical)

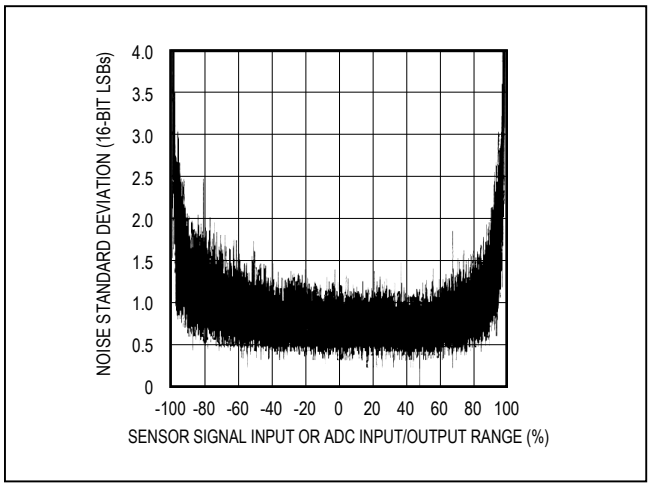

Figure 2c. Analog Front-End Noise Standard Deviation of the Samples (typical)

front-end settings when the sensor's characteristics are unknown. Use the tabulated values (Tables 1 and 2) if the peak sensor excursions are known. See the *Test System Interface* section for details on writing these analog front-end bits.

The PGA gain and the CO are very stable, but are not accurate. Manufacturing variances on the gain and offset of the MAX1460 analog front-end superposition the residual sensor errors, and are later removed during final calibration.

For example, suppose the sensor's sensitivity is +10mV/V with an offset of -12mV/V. Let the supply voltage be +5V. The full scale (-FS) output of the sensor is then +5V(-12mV/V) = -60mV; +FS is then +5V (-12mV/V + 10mV/V) = -10mV. Following through the flowchart, the PGA gain setting is +3 (gain = 93V/V) and the CO correction setting is +1 (+25mV RTI) - (Referred-to Input). The coarsely corrected -FS input to the ADC is (-60mV + 25mV)93 = -3.255V. The +FS input to the ADC is (-10mV + 25mV)93 = +1.395V. The input range of the ADC is $\pm V_{DD}$. Thus the maximum and minimum digitized sensor signals become -3.255 / 5 = -0.651 and +1.395 / 5 = +0.279.

Notice that the bridge multiplies the signal by V_{DD} and the ADC divides the signal by V_{DD}. Thus, the system is ratiometric and not dependent on the DC value of V_{DD}. The ADC output clips to ±1.0 when input values exceed $\pm V_{DD}$. The best signal-to-noise ratio (SNR) is achieved when the ADC input is within ±85% of V_{DD} (Figure 2).

The MAX1460 includes an internal temperature-sensing bridge allowing the MAX1460 temperature to be used as a proxy for the sensor temperature. For this reason the MAX1460 must be mounted in thermal proximity to the sensor. The output of the temperature-sensing bridge is also corrected by a 3-bit coarse-offset DAC and processed by the ADC. The selection of the Temperature Sensor Offset (TSO) bits in the configuration register should be made so that the digitized temperature signal is as close to 0.0 as possible at midscale temperature. This is done to maximize the dynamic range of the thermal-calibration coefficients (Table 3).

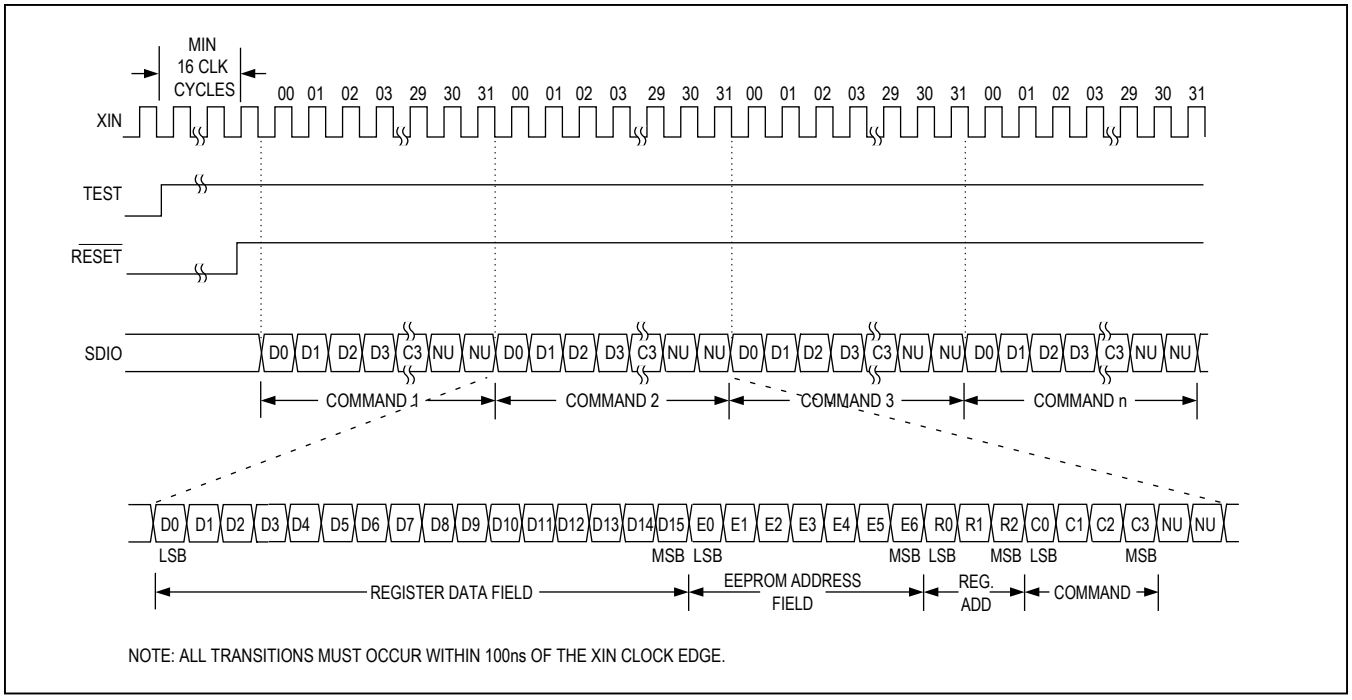

Figure 3. Test-System Command Timing Diagram

Table 3. Temperature Sensor Offset (TSO) Settings

TSO SETTING	TSO-2	TSO-1	TSO-0	TEMPERATUR BRIDGE OFFSET
0	0	0	0	Maximum
1	0	0	0	–
2	0	1	0	–
3	0	1	0	–
4	1	0	0	–
5	1	0	1	–
6	1	1	0	–
7	1	1	1	Minimum

Test-System Interface: Writing Calibration Coefficients to the DSP Registers and EEPROM

To make the MAX1460 respond to commands from the test system, raise the TEST pin and drive XIN with a 2MHz clock signal. It is not necessary to remove the resonator. $\overline{\text{RESET}}$ must be low for at least 16 clock cycles to initialize the MAX1460. Then, a rising transition on $\overline{\text{RESET}}$ begins a 32-bit serial transfer of the testsystem command word through SDIO. The test system transitions SDIO on falling edges of the XIN clock; the MAX1460 latches data is on the rising edge (Figure 3).

The 32-bit command word generated by the test-system is divided into four fields (Figure 3). The 4-bit command field is interpreted in Table 4. The other fields are usually ignored, except that command 1 hex uses the two register fields, and command 2 hex requires an EEPROM address. The command word fields are:

- Register Data Field: Holds the calibration coefficients to be written into the MAX1460 16-bit registers
- EEPROM Address Field: Holds the hexadecimal address of the EEPROM bit to be set (from 00 hex to 7F hex)
- Register Address Field: Contains the address of the register (0 to 7) where the calibration coefficient is to be written
- Command Field: Instructs the MAX1460 to take a particular action (Table 4)

Table 4. Test System Commands

COMMAND	HEX CODE	C3	C2	C1	C0
Write a calibration coefficient into a DSP register.	1 hex	0	0	0	1
Block-Erase the entire EEPROM (writes “0” to all 128 bits).	4 hex	0	1	0	0
Write “1” to a single EEPROM bit.	2 hex	0	0	1	0
NOOP (NO-OPeration)	0 hex	0	0	0	0
Start Conversion command. The registers are not updated with EEPROM values. SDIO and SDO are enabled as DSP outputs.	8 hex	1	0	0	0
Start Conversion command. The registers are updated with EEPROM values. SDIO and SDO are enabled as DSP outputs.	A hex	1	0	1	0
Start Conversion command. The registers are not updated with EEPROM values. SDIO and SDO are disabled.	C hex	1	1	0	0
Start Conversion command. The registers are updated with EEPROM values. SDIO and SDO are disabled.	E hex	1	1	1	0
Reserved	3, 5, 6, 7, 9, B, D, F hex	-	-	-	-

Table 5. DSP Calibration Coefficient Registers

COEFFICIENT	REGISTER ADDRESS	FUNCTION	RANGE	FORMAT
Gain	1	Gain correction	-32768 to +32767	Integer
G_1	2	Linear TC gain	-1.0 to +0.99997	Fraction
G_2	3	Quadratic TC gain	-1.0 to +0.99997	Fraction
Of_0	4	Offset correction	-1.0 to +0.99997	Fraction
Of_1	5	Linear TC offset	-1.0 to +0.99997	Fraction
Of_2	6	Quadratic TC offset	-1.0 to +0.99997	Fraction
D_{OFF}	7	Output midscale pedestal	-32768 to +32767	Integer

Writing to the DSP Registers

Command 1 hex writes calibration coefficients from the test system directly into the DSP registers. Tester commands 8 hex and C hex cause the MAX1460 to start a conversion using the calibration coefficients in the registers. This direct use of the registers speeds calibration and compensation because it does not require EEPROM write-access time. Bringing $\overline{RESET}$ low clears the DSP registers, so the test system should always write to the registers and start a conversion in a single command timing sequence.

As shown in Table 5, seven registers hold the calibration coefficients of the characteristic equation [DOUT = Gain $(1+G_1T + G_2T^2)$ (Signal + $Of_0 + Of_1T + Of_2T^2$) + D_{OFF}] implemented by the MAX1460 DSP. All of th registers are 16-bit, two’s complement coding format. When a register is interpreted as an integer, the decimal range is from -32768 (8000 hex) to +32767 (7FFF hex). Fractional coefficient values range from -1.0 (8000 hex) to +0.99997 (7FFF hex).

The register at address 0 is called the Configuration Register. It holds the coarse offset, PGA gain, $\overline{Op}$ $\overline{Amp}$ $\overline{Power\text{-}Down}$, temperature-sensor offset, repeat mode, and reserved bits, as shown in Table 6. The functionality of the coarse offset, PGA gain, and temperature-sensor bits are described in the Analog Front End section.

The $\overline{Op}$ $\overline{Amp}$ $\overline{Power\text{-}Down}$ bit enables the uncommitted op amp when set. The repeat-mode bit is tested by the last instruction of the DSP microcode, and, if set, immediately initiates another conversion cycle. The Maxim reserved bits should not be altered.

Table 6. Configuration Register Bitmap

EEPROM ADDRESS (HEX)	BIT POSITION	DESCRIPTION
01	0 (LSB)	CO-0 (LSB)
02	1	CO-1 (MSB)
03	2	CO-S (Sign)
04	3	PGA-1 (MSB)
05	4	PGA-0 (LSB)
06	5	Maxim Reserved
07	6	Maxim Reserved
08	7	$\overline{\text{Op Amp Power-Down}}$
09	8	Maxim Reserved
0A	9	TSO-0 (LSB)
0B	10	TSO-1
0C	11	TSO-2 (MSB)
0D	12	Maxim Reserved
0E	13	Maxim Reserved
0F	14	Maxim Reserved
10	15 (MSB)	Repeat Mode

Writing to the Internal EEPROM

The test system writes to the EEPROM with commands 4 hex (Block-Erase the entire EEPROM), 2 hex (Write "1" to a single EEPROM bit) and 0 hex (NOOP). During normal operation (when the TEST pin is low) or when the test system issues instructions A hex or E hex (Start conversion from EEPROM values), the DSP reads the Calibration Coefficients from the EEPROM.

In the normal production flow, determine the calibration coefficients using direct register access. Then load the calibration coefficients into the EEPROM with tester instruction 2 hex. Instruction 4 hex block-erases the EEPROM and is necessary only for a rework or reclaim operation. For each part, the Maxim reserved bits in the Configuration Register should be read before instruction 4 hex is issued, and restored afterwards. The MAX1460 is shipped with its internal EEPROM uninitialized, except for the reserved bits.

The internal 128-bit EEPROM is arranged as eight 16- bit words. These eight words are the configuration register and the seven calibration-coefficient values (Table 7).

The MAX1460 EEPROM is bit addressable. The final calibration coefficients must be mapped into the EEPROM locations that are to be set. There is no bitclear instruction. Any EEPROM write operation is necessarily long because the internal charge pump must create and maintain voltages above 20V long enough to cause a reliably permanent change in the memory.

Writing an EEPROM bit requires 6ms, so writing the EEPROM typically requires less than 400ms. Do not decrease the EEPROM write times.

To write an EEPROM bit, the test system must be compliant with the *Command Timing Diagram* shown in Figure 3, performing the following operations:

1) Issue command 0 hex, including the EEPROM address field of the bit to be written.
2) Issue command 2 hex, with the address field used in step 1. Continuously repeat this command 375 times (6ms).
3) Issue command 0 hex, including the EEPROM address field used in steps 1 and 2.

The procedure for using command 4 hex (Block-Erase the EEPROM) is similar. Record the Maxim Reserved bits in the configuration register prior to using this command, and restore them afterwards. The number of Block-Erase operations should not exceed 100.

1) Issue command 0 hex.
2) Issue command 4 hex. Continuously repeat this command 375 times (6ms).
3) Issue command 0 hex.

Test System Interface: Observing the DSP Operation

Test system commands 8 hex and A hex initiate a conversion while allowing the test system to observe the operation of the DSP. To calibrate a unit, the test system must know the digitized temperature and sensor signals, stored in DSP registers 8 and 9, and the calibrated and compensated output stored in DSP register 10. The test system should also verify the EEPROM contents, registers 0–7. All these signals pass through DSP register S during the execution of the instruction ROM microcode. The SDO pin outputs the S register values, and the SDIO pin tells the tester which signal is currently on S.

Table 7. EEPROM Memory Map

EE Address (hex)	10	0F	0E	0D	0C	0B	0A	09	08	07	06	05	04	03	02	01
Contents	MSB	Configuration														LSB
EE Address (hex)	20	1F	1E	1D	1C	1B	1A	19	18	17	16	15	14	13	12	11
Contents	MSB	Gain														LSB
EE Address (hex)	30	2F	2E	2D	2C	2B	2A	29	28	27	26	25	24	23	22	21
Contents	MSB	G_1														LSB
EE Address (hex)	40	3F	3E	3D	3C	3B	3A	39	38	37	36	35	34	33	32	31
Contents	MSB	G_2														LSB
EE Address (hex)	50	4F	4E	4D	4C	4B	4A	49	48	47	46	45	44	43	42	41
Contents	MSB	Of_0														LSB
EE Address (hex)	60	5F	5E	5D	5C	5B	5A	59	58	57	56	55	54	53	52	51
Contents	MSB	Of_1														LSB
EE Address (hex)	70	6F	6E	6D	6C	6B	6A	69	68	67	66	65	64	63	62	61
Contents	MSB	Of_2														LSB
EE Address (hex)	00	7F	7E	7D	7C	7B	7A	79	78	77	76	75	74	73	72	71
Contents	MSB	D_{OFF}														LSB

Table 8. Subset of DSP Instruction

INSTRUCTION CODE (PS) (HEX)	PROGRAM COUNTER (P) (HEX)	S REGISTER VALUE
D0	66 or 6C	CO-0 (LSB)
D1	47	Register 1—Gain
D2	11	Register 2—G_1
D3	2E	Register 3—G_2
D4	38	Register 4—Of_0
D5	03	Register 5—Of_1
D6	22	Register 6—Of_2
D7	56	Register 7—D_{OFF}
D8	01	Register 8—Temperature Signal
D9	3B	Register 9—Sensor Signal
EA	65 or 6B	Register 10—Compensated Output D

There are three internal DSP registers that are directly observable on the SDIO and SDO pins:

- S: 16-bit DSP Scratch or Accumulator register, containing the result of the execution of the current microcode instruction.
- P: 8-bit DSP Program Pointer register, which holds the address of the instruction ROM microcode.
- PS: 8-bit DSP Program Store register. PS is the instruction that the DSP is currently executing. PS is the instruction ROM data at address P.

The DSP instructions relevant to the test system are listed in Table 8.

After the test system sends the Start Conversion commands 8 hex or A hex, SDIO and SDO are both enabled as MAX1460 serial outputs. The test system should disable (high impedance) its SDIO driver to avoid a bus conflict at this time so that the MAX1460 can drive the pin. After the DSP executes each one of the microcode instructions, the contents of the registers S, P, and PS are output in a serial format (Figure 4). A new DSP instruction and a new state of the S, P, and PS registers are delivered every 16n + 9 clock cycles, where n = 0, 1, 2... after the Start Conversion command completes. The tester should latch the SDIO and SDO bits on the falling edge of the

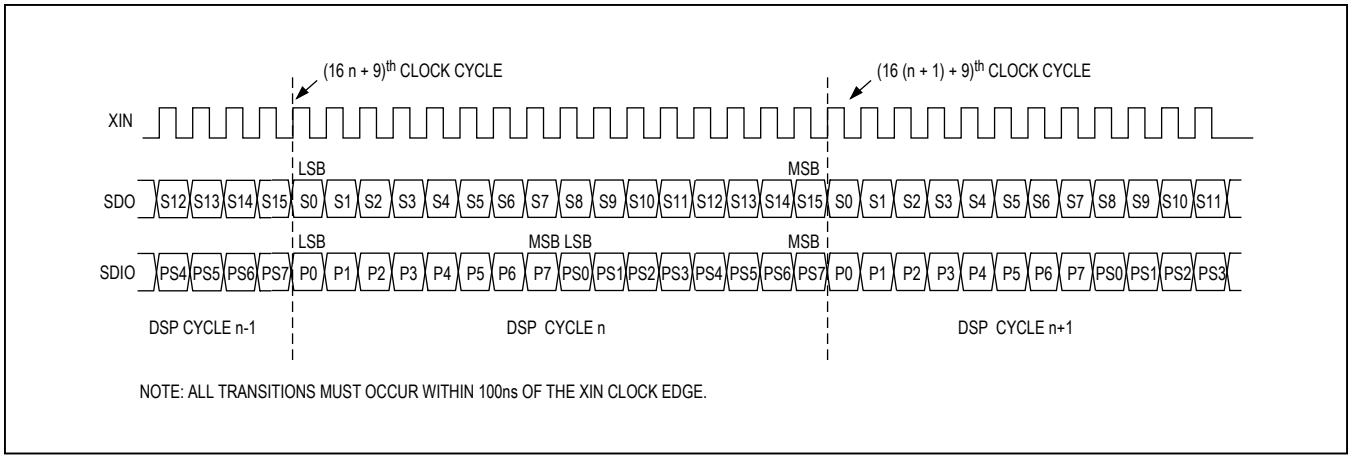

Figure 4. DSP Serial Output Timing Diagram

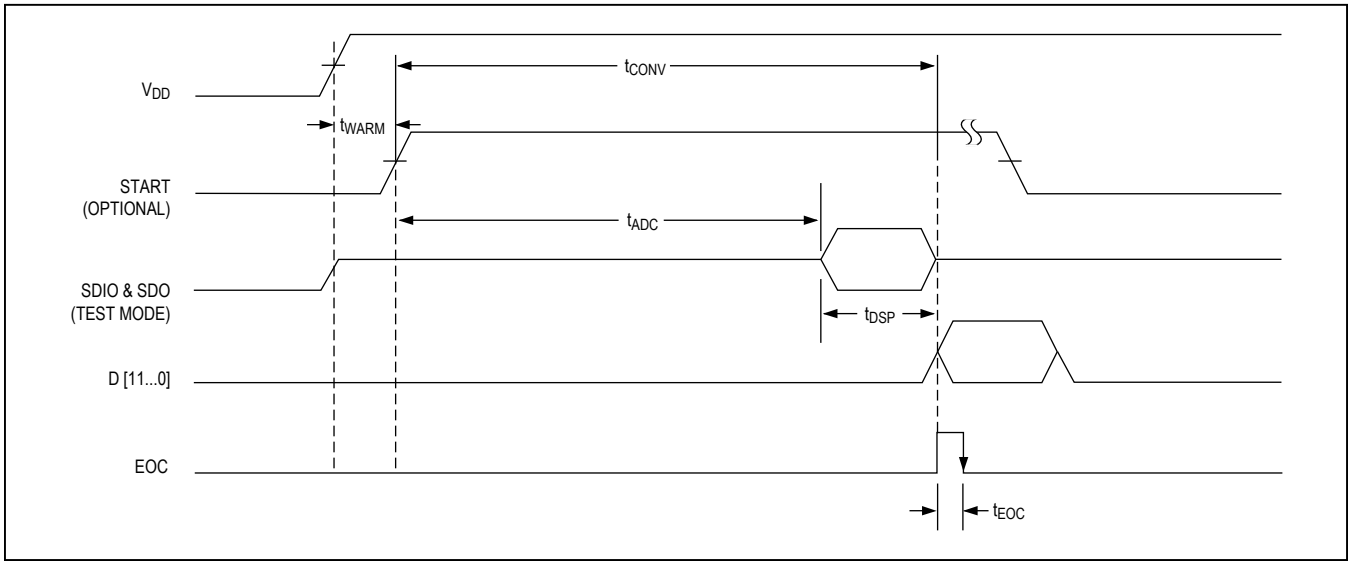

Figure 5. MAX1460 Conversion Timing

XIN clock signal. When the P and PS registers in Table 8 appear on SDIO, the tester should save the corresponding SDO data.

The conversion timing of the MAX1460 is shown in Figure 5 and Table 9. In the figure, the conversion is initiated by a rising transition on the START pin. Equivalently, conversion can be initiated in TEST mode after completion of tester commands 8 hex or A hex, or reinitiated by the state of the Repeat Mode bit in the configuration register. After a conversion is initiated, the 16-bit ADC digitizes the temperature and sensor signals during tADC. Then, the DSP executes the instruction ROM microcode during tDSP. In TEST mode, and during tDSP, SDIO and SDO outputs carry useful information. At 130,586 clock cycles after the Start Conversion command is received, the LSB of the S and P DSP registers is available on SDO and SDIO. The last DSP instruction is D0 hex. The tester can now start a new communication sequence by lowering the $\overline{RESET}$ pin for at least 16 clock cycles, and then resume driving SDIO. SDIO becomes high impedance when $\overline{RESET}$ is low.

Table 9. MAX1460 Conversion Timing

PARAMETER	SYMBOL	MIN	MAX	UNITS
Sensor Warm-Up Time	t_{WARM}	35	—	ms
ADC Time	t_{ADC}	130,585	130,585	XIN clk cycles
DSP Time	t_{DSP}	3,220	3,364	XIN clk cycles
EOC Pulse Width	t_{EOC}	8	8	XIN clk cycles
Conversion Time	t_{CONV}	133,805	133,949	XIN clk cycles

Applications Information

Calibration and Compensation Procedure

Perform fine calibration by characterizing the sensor/MAX1460 pair using the test system and then finding the calibration coefficients Gain, G_1, G_2, Of_0, Of_1, and Of_2 using the equations below. This simple fine-calibration procedure requires three temperatures, denoted A, B, and C, and two sensor excitations, named S and L for small and large. Thus, there are six data points (AS, AL, BS, BL, CS, and CL); six unknown calibration coefficients; and six versions of the characteristic equation, in the form:

Equation (1)

$$D_L - D_{OFF} = Gain\left(1 + G_1T_C + G_2T_C^2\right)$$
$$\left(Signal_{CL} + Of_0 + Of_1T_C + Of_2T_C^2\right)$$

where D_L, D_S, and D_{OFF} are determined by the end product specification. D_L is the desired MAX1460 output corresponding to the L sensor excitation; D_S is the desired MAX1460 output corresponding to the S sensor excitation; D_{OFF} is the desired midscale output; SignalCL is the digitized sensor reading at temperature C with the L sensor excitation applied; and T_C is the digitized temperature reading at temperature C.

Unstable digitized temperature readings indicate that thermal equilibrium has not been achieved, necessitating increased soak times or a better thermal control. Averaging many readings from the MAX1460 will help filter out AC variations in the sensor excitation and oven temperature.

Begin calibration by soaking the sensor and the MAX1460 pair at the first temperature, A, and apply the L excitation to the sensor. Start a conversion and record the digitized temperature T_A and the digitized signal $Signal_{AL}$. Apply the S sensor excitation, and record the digitized signal $Signal_{AS}$. Repeat this procedure for temperatures B and C, recording T_B, $Signal_{BL}$, $Signal_{BS}$, T_C, $Signal_{CL}$, and $Signal_{CS}$.

The A_L and A_S versions of equation 1 may be ratioed to obtain:

Equation (2a)

$$\frac{Signal_{AL} - x \cdot Signal_{AS}}{1-x} + Of_0 + Of_1T_A + Of_2T_A^2 = 0$$

Similarly,

Equation (2b)

$$\frac{Signal_{BL} - x \cdot Signal_{BS}}{1-x} + Of_0 + Of_1T_B + Of_2T_B^2 = 0$$

Equation (2c)

$$\frac{Signal_{CL} - x \cdot Signal_{CS}}{1-x} + Of_0 + Of_1T_C + Of_2T_C^2 = 0$$

where

Equation (3)

$$x = \frac{D_L - D_{OFF}}{D_S - D_{OFF}}$$

Equations 2a, 2b, and 2c form a system of three linear equations, with three unknowns, Of_0, Of_1, and Of_2. Solve for Of_0, Of_1, and Of_2.

Equation (4a)

$$\left(Y_{CS} - Y_{AS}\right) + G_1\left(T_AY_{CS} - T_CY_{AS}\right) +$$
$$G_2\left(T_A^2Y_{CS} - T_C^2Y_{AS}\right) = 0$$

The small sensor excitation versions of Equation 1 can be ratioed to obtain:

Equation (4b)

$$\left(Y_{CS} - Y_{BS}\right) + G_1\left(T_BY_{CS} - T_CY_{BS}\right) +$$
$$G_2\left(T_B^2Y_{CS} - T_C^2Y_{BS}\right) = 0$$

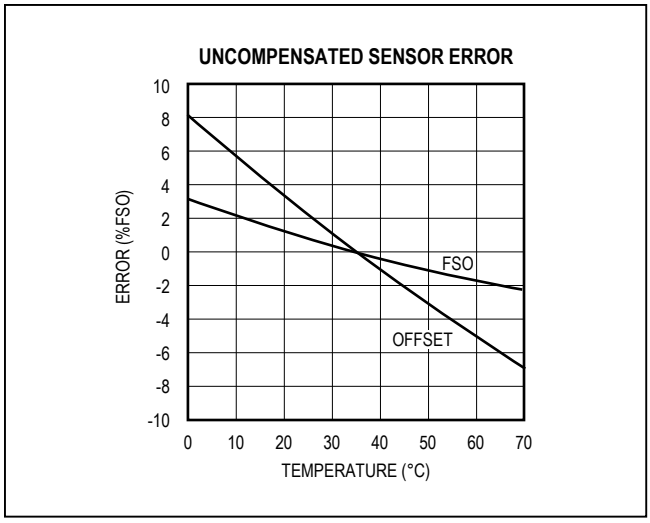

Figure 6. Sensor Characteristics Before Compensation

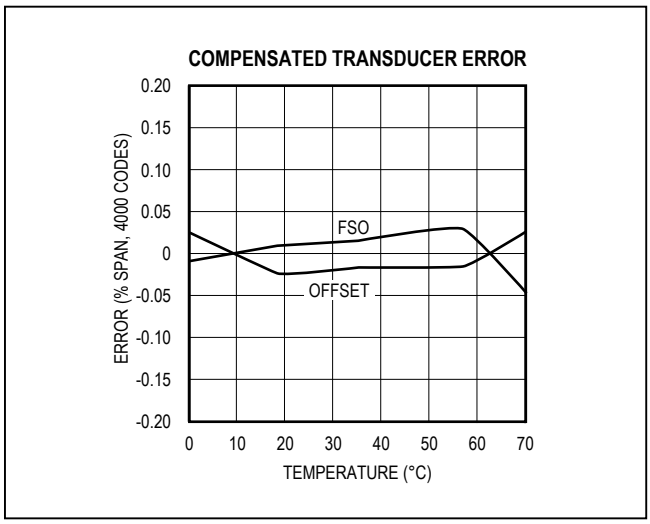

Figure 7. Compensated Sensor/MAX1460 Pair

where:

Equation (5a)

$$Y_{AS} = \frac{D_S - D_{OFF}}{Signal_{AS} + Of_0 + Of_1T_A + Of_2T_A{}^2}$$

Equation(5b)

$$\frac{Signal_{AL} - x \cdot Signal_{AS}}{1 - x} + Of_0 + Of_1T_A + Of_2T_A{}^2 = 0$$

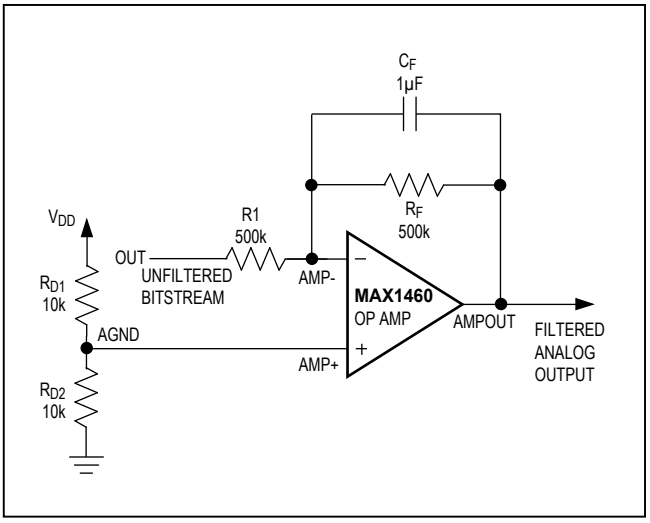

Figure 8. Filtering the Output DAC

Equation (5c)

$$\frac{Signal_{AL} - x \cdot Signal_{AS}}{1 - x} + Of_0 + Of_1T_A + Of_2T_A{}^2 = 0$$

Equations 4a and 4b form a system of two linear equations and two unknowns, G1 and G2. Solve for G1 and G2. Equation 1 can now be readily solved for the last unknown, Gain.

Arithmetic manipulation can magnify measurement errors and noise. Quantization of the calibration coefficients is another reason to consider adjusting the Gain and DOFF coefficients. To do this, load the MAX1460 registers with the calculated coefficients Gain, G_1, G_2, Of_0, Of_1, Of_2, and D_{OFF}. Assuming the oven is still at temperature C and the S sensor excitation is still applied, measure the output D_{CS}. Change to the L sensor excitation, and measure D_{CL}. Compute the new Gain coefficient using equation 6. Remeasure D_{CL}, and compute the new D_{OFF} coefficient, given by equation 7.

Equation (6)

$$GAIN_{new} = Gain\frac{D_L - D_S}{D_{CL} - D_{CS}}$$

Equation (7)

$$D_{OFFnew} = D_{OFF} + D_L - D_{CL}$$

The final calibration coefficients may now be written into the MAX1460 EEPROM. The unit is now ready for final test.

This algorithm minimizes the error directly at the six test conditions, AS, AL, BS, BL, CS, and CL. Space the temperatures A, B, and C widely to minimize the signal-to-noise ratio of the measurement. If there is a large error remaining in the finished product, move the calibration temperatures closer to the peak error temperatures. Similarly, full-scale sensor excitation may not be the best calibration condition if the sensor has nonlinearities. Move S and L away from full scale.

Figure 6 shows the characteristics of an individual Lucas-NovaSensor model NPH8-100-EH, 0 to 15psig, silicon pressure sensor. Figure 7 shows the result of the compensated sensor/MAX1460 pair.

Using the Compensated Sensor/MAX1460 Pair

After calibration and removal from the test system, the MAX1460 and the sensor form a mated pair. The START pin can be connected to V_{DD} or left unconnected if the sensor does not require a significant warm-up time. Now operation is simple: just apply power and latch the parallel output D when EOC falls. Temperature is digitized during the first half of t_{ADC}, so the MAX1460 provides a minimum sensor warm-up time of 35ms. Using a 2MHz resonator, the conversion time t_{CONV} is nominally 67ms. If the Repeat Mode bit is set, conversions repeat at a rate of 15Hz.

If the sensor requires more than 35ms of warm-up time, the START pin may be used to initiate conversion (Figure 5). If the Repeat Mode bit is set, START should remain high. If the Repeat Mode bit is reset, START may be used to externally control the conversion rate of the MAX1460. After the 12-bit parallel output D is latched, end the conversion by taking START low for at least one clock cycle.

The output DAC converts the parallel digital output into a serial bitstream on OUT. A simple external lowpass filter, using the MAX1460 op amp, converts the OUT bitstream into a ratiometric analog voltage (Figure 8). The filter shown is an inverting configuration, but the Gain and DOFF coefficients of the characteristic equation can be adjusted to obtain either polarity. If the op amp is not used, it can be powered down using the $\overline{\text{Op Amp Power-Down}}$ bit in the configuration register.

The MAX1460 requires a minimum of external components:

- One power-supply bypass capacitor (C1) from V_{DD} to V_{SS}.
- One 2MHz ceramic resonator (X1).
- Two 10kΩ resistors for the AGND pin.
- If an analog output is desired, two 500kΩ resistors and a 1µF capacitor are needed for filtering.

MAX1460 Evaluation/ Development Kit

The MAX1460 evaluation kit (EV kit) speeds the development of MAX1460-based transducer prototypes and test systems. First-time users of the MAX1460 are strongly encouraged to use this kit, which includes:

1) Evaluation board, with a MAX1460 sample and a silicon pressure sensor, ready for customer evaluation.
2) Interface board that must be connected to a PC parallel port.
3) MAX1460 communication/compensation software (Windows compatible), which enables programming of the MAX1460 one module at a time.
4) Detailed Design/Applications manual, developed for sensor-test engineers.

The evaluation kit order number is MAX1460EVKIT.

Pin Configuration

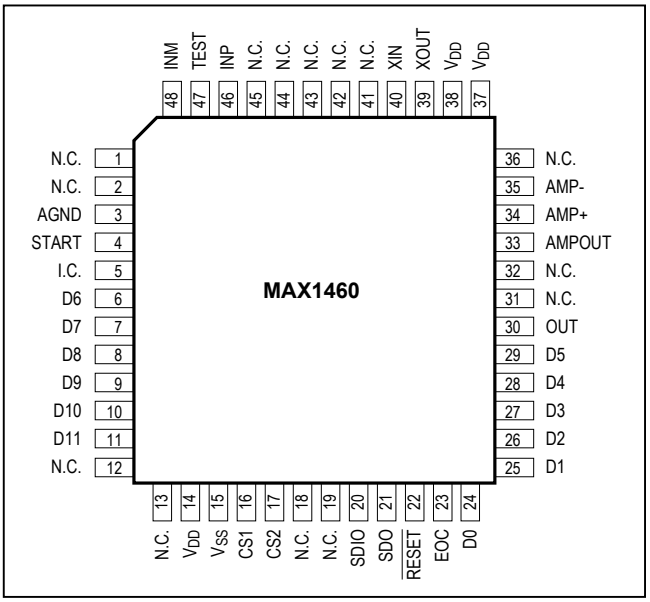

Functional Diagram

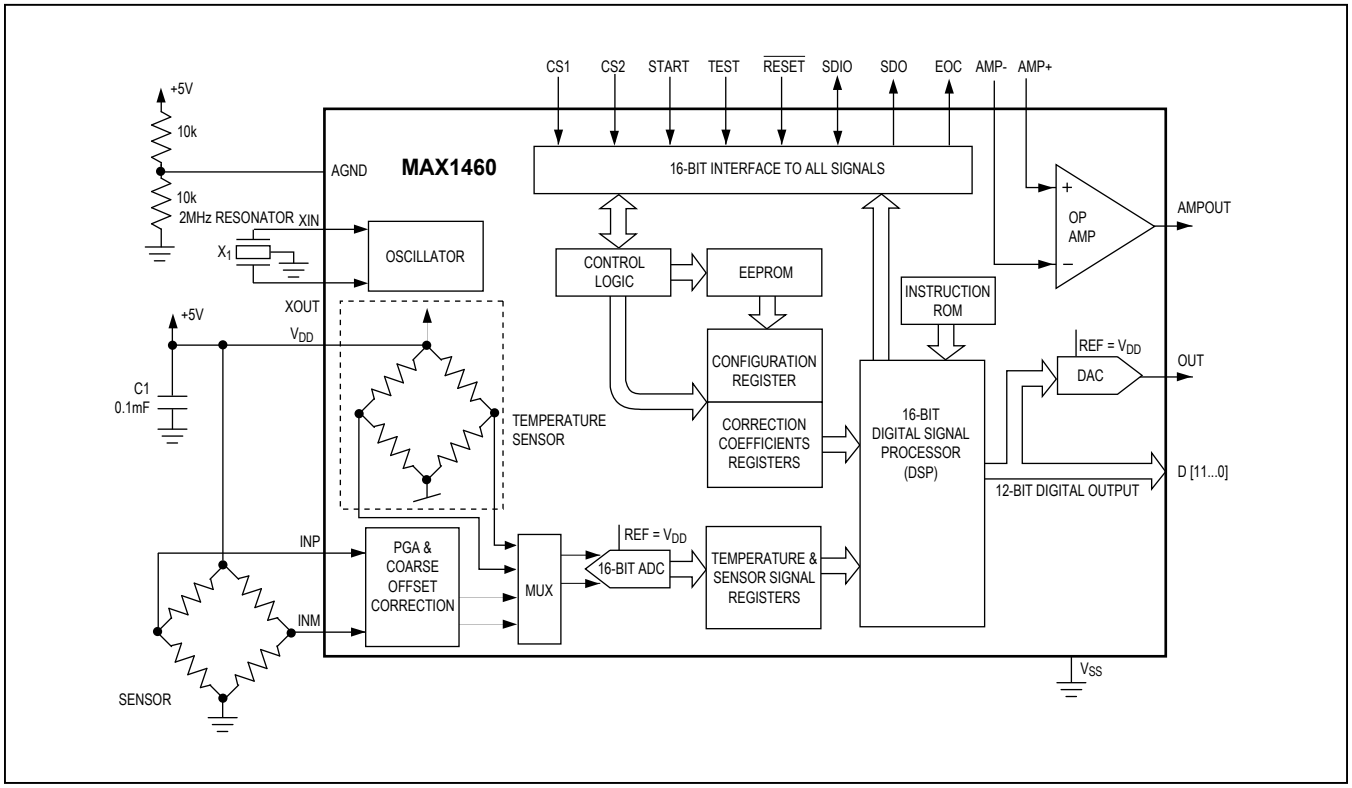

Chip Information

TRANSISTOR COUNT: 59,855

SUBSTRATE CONNECTED TO V_{SS}

Package Information

For the latest package outline information and land patterns (footprints), go to **www.maximintegrated.com/packages**. Note that a "+", "#", or "-" in the package code indicates RoHS status only. Package drawings may show a different suffix character, but the drawing pertains to the package regardless of RoHS status.

PACKAGE TYPE	PACKAGE CODE	OUTLINE NO.	LAND PATTERN NO.
20 TQFP	C48-6	21-0054	90-0093

Revision History

REVISION NUMBER	REVISION DATE	DESCRIPTION	PAGES CHANGED
0	10/99	Initial release	—
1	5/14	Removed automotive information from *General Description* and *Applications* sections	1

For pricing, delivery, and ordering information, please contact Maxim Direct at 1-888-629-4642, or visit Maxim Integrated's website at www.maximintegrated.com.

Maxim Integrated cannot assume responsibility for use of any circuitry other than circuitry entirely embodied in a Maxim Integrated product. No circuit patent licenses are implied. Maxim Integrated reserves the right to change the circuitry and specifications without notice at any time. The parametric values (min and max limits) shown in the Electrical Characteristics table are guaranteed. Other parametric values quoted in this data sheet are provided for guidance.

Maxim Integrated and the Maxim Integrated logo are trademarks of Maxim Integrated Products, Inc. © 2014 Maxim Integrated Products, Inc.