ADC1113S125

Single 11-bit ADC; serial JESD204A interface

Rev. 02 — 2 July 2012 Product data sheet

1. General description

The ADC1113S125 is a single channel 11-bit Analog-to-Digital Converter (ADC) optimized for high dynamic performance and low power at a sample rate of 125 Msps. Pipelined architecture and output error correction ensure the ADC1113S125 is accurate enough to guarantee zero missing codes over the entire operating range. Supplied from a 3 V source for analog and a 1.8 V source for the output driver, it outputs data in serial mode via a single differential lane, which complies with the JESD204A standard. The integration of Serial Peripheral Interface (SPI) allows the user to easily configure the ADCs and the serial output modes. The device also includes a programmable full-scale SPI to allow a flexible input voltage range from 1 V (p-p) to 2 V (p-p).

Excellent dynamic performance is maintained from the baseband to input frequencies of 170 MHz or more, making the ADC1113S125 ideal for use in communications, imaging, and medical applications.

2. Features and benefits

- SNR, 66.2 dBFS; SFDR, 87 dBc
- Sample rate: 125 Msps
- Single channel, 11-bit pipelined ADC core
- 3 V, 1.8 V power supplies
- Flexible input voltage range: 1 V (p-p) to 2 V (p-p)
- Serial output
- Compliant with JESD204A serial transmission standard
- Pin compatible with ADC1613S series, ADC1413S series, and ADC1213S series
- Input bandwidth, 600 MHz
- Power dissipation, 550 mW at 80 Msps
- SPI register programming
- Duty cycle stabilizer
- High Intermediate Frequency (IF) capability
- Offset binary, two's complement, gray code
- Power-down mode and Sleep mode
- HVQFN32 package

3. Applications

- Wireless and wired broadband communications
- Spectral analysis
- Ultrasound equipment
- Portable instrumentation
- Imaging systems

4. Ordering information

Table 1. Ordering information

Type number	Sampling frequency (Msps)	Package		
		Name	Description	Version
ADC1113S125HN-C1	125	HVQFN32R	plastic thermal enhanced very thin quad flat package; no leads; 32 terminals; resin based; body 7 × 7 × 0.8 mm	SOT1152-1

© IDT 2012. All rights reserved.

5. Block diagram

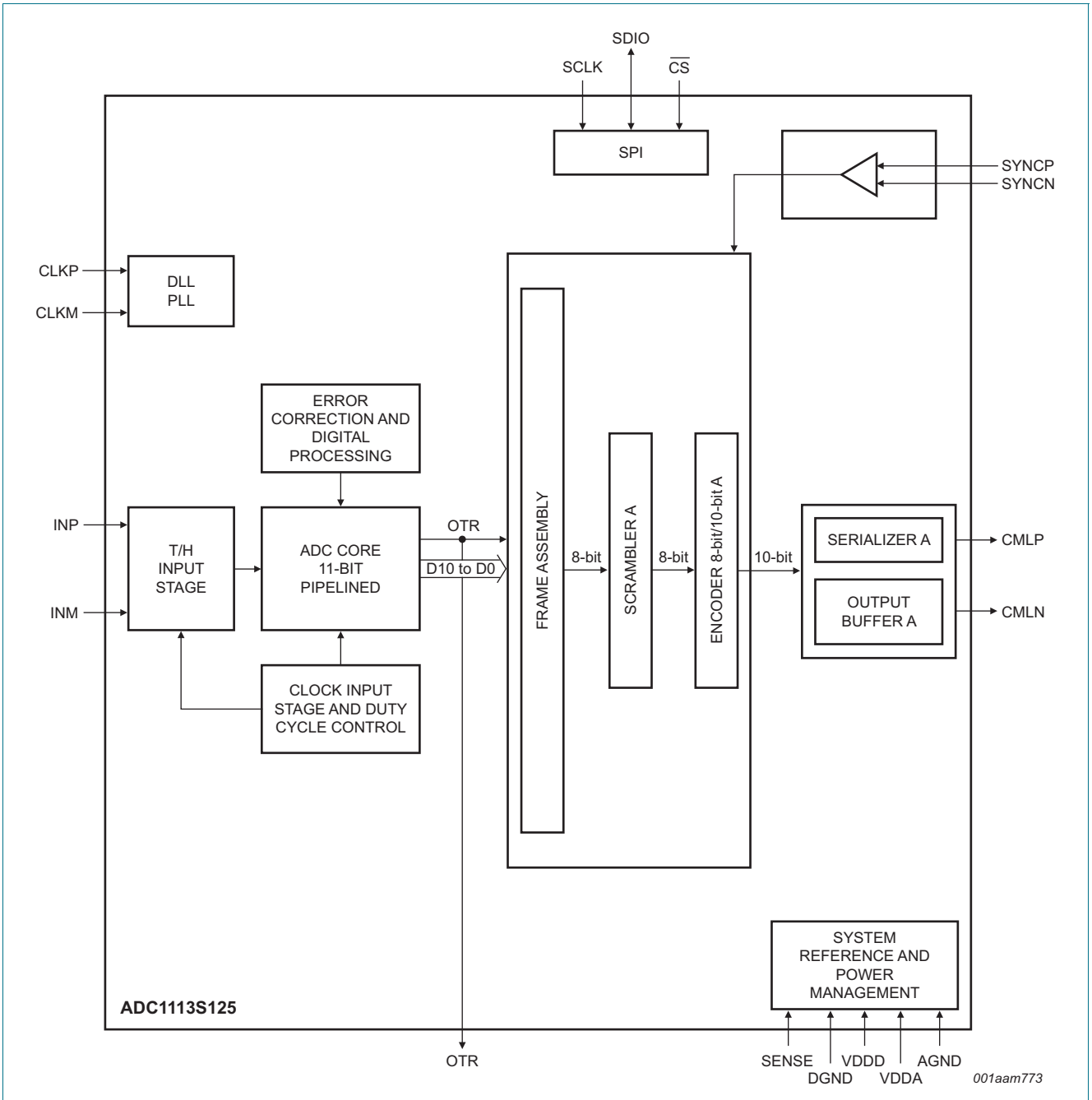

Fig 1. Block diagram

© IDT 2012. All rights reserved.

6. Pinning information

6.1 Pinning

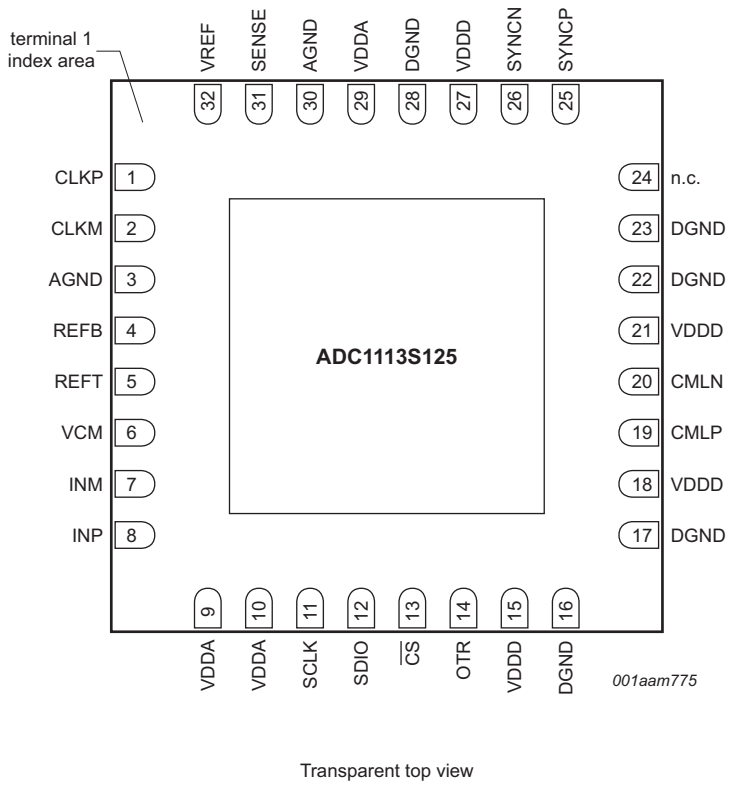

Fig 2. Pinning diagram

6.2 Pin description

Table 2. Pin description

Symbol	Pin	Type [1]	Description
CLKP	1	I	clock input
CLKM	2	I	complementary clock input
AGND	3	G	analog ground
REFB	4	O	ADC bottom reference
REFT	5	O	ADC top reference
VCM	6	O	ADC output common voltage
INM	7	I	ADC complementary analog input
INP	8	I	ADC analog input
VDDA	9	P	analog power supply 3 V
VDDA	10	P	analog power supply 3 V
SCLK	11	I	SPI clock
SDIO	12	I/O	SPI data input/output

© IDT 2012. All rights reserved.

Table 2. Pin description *...continued*

Symbol	Pin	Type [1]	Description
$\overline{CS}$	13	I	chip select
OTR	14	O	out-of-range information
VDDD	15	P	digital power supply 1.8 V
DGND	16	G	digital ground
DGND	17	G	digital ground
VDDD	18	P	digital power supply 1.8 V
CMLP	19	O	serial output
CMLN	20	O	serial complementary output
VDDD	21	P	digital power supply 1.8 V
DGND	22	G	digital ground
DGND	23	G	digital ground
n.c.	24	-	not connected
SYNCP	25	I	positive synchronization signal from the receiver
SYNCN	26	I	negative synchronization signal from the receiver
VDDD	27	P	digital power supply 1.8 V
DGND	28	G	digital ground
VDDA	29	P	analog power supply 3 V
AGND	30	G	analog ground
SENSE	31	I	reference programming pin
VREF	32	I/O	voltage reference input/output

[1] P: power supply; G: ground; I: input; O: output; I/O: input/output.

7. Limiting values

Table 3. Limiting values
In accordance with the Absolute Maximum Rating System (IEC 60134).

Symbol	Parameter	Conditions	Min	Max	Unit
V_{DDA}	analog supply voltage		–0.4	+4.6	V
$V_{DDD(1V8)}$	digital supply voltage (1.8 V)		–0.4	+2.5	V
T_{stg}	storage temperature		–55	+125	°C
T_{amb}	ambient temperature		–40	+85	°C
T_j	junction temperature		-	125	°C

8. Thermal characteristics

Table 4. Thermal characteristics

Symbol	Parameter	Conditions	Typ	Unit
$R_{th(j-a)}$	thermal resistance from junction to ambient	[1]	25.6	K/W
$R_{th(j-c)}$	thermal resistance from junction to case	[1]	8.6	K/W

[1] Value for six layers board in still air with a minimum of 25 thermal vias.

© IDT 2012. All rights reserved.

9. Static characteristics

Table 5. Static characteristics[1]

Symbol	Parameter	Conditions	Min	Typ	Max	Unit
Supplies						
V_{DDA}	analog supply voltage		2.85	3.0	3.4	V
$V_{DDD(1V8)}$	digital supply voltage (1.8 V)		1.65	1.8	1.95	V
I_{DDA}	analog supply current	f_{clk} = 125 Msps; f_i = 70 MHz	-	185	-	mA
$I_{DDD(1V8)}$	digital supply current (1.8 V)	f_{clk} = 125 Msps; f_i = 70 MHz	-	75	-	mA
P_{tot}	total power dissipation	f_{clk} = 125 Msps	-	690	-	mW
		f_{clk} = 105 Msps	-	625	-	mW
		f_{clk} = 80 Msps	-	550	-	mW
		f_{clk} = 65 Msps	-	495	-	mW
P	power dissipation	Power-down mode	-	30	-	mW
		Standby mode	-	150	-	mW
Clock inputs: pins CLKP and CLKM (AC-coupled)						
Low-Voltage Positive Emitter-Coupled Logic (LVPECL)						
$V_{i(clk)dif}$	differential clock input voltage	peak-to-peak	-	1.6	-	V
Sine						
$V_{i(clk)dif}$	differential clock input voltage	peak	±0.8	±3.0	-	V
Low Voltage Complementary Metal Oxide Semiconductor (LVCMOS)						
V_{IL}	LOW-level input voltage		-	-	$0.3V_{DDA}$	V
V_{IH}	HIGH-level input voltage		$0.7V_{DDA}$	-	-	V
SPI: pins $\overline{CS}$, SDIO, SCLK						
V_{IL}	LOW-level input voltage		0	-	$0.3V_{DDA}$	V
V_{IH}	HIGH-level input voltage		$0.7V_{DDA}$	-	V_{DDA}	V
I_{IL}	LOW-level input current		−10	-	+10	μA
I_{IH}	HIGH-level input current		−50	-	+50	μA
C_I	input capacitance		-	4	-	pF
Analog inputs: pins INP and INM						
I_I	input current	track mode	−5	-	+5	μA
R_I	input resistance	track mode	-	15	-	Ω
C_I	input capacitance	track mode	-	5	-	pF
$V_{I(cm)}$	common-mode input voltage	track mode	1.1	1.5	2	V
B_i	input bandwidth		-	600	-	MHz
$V_{I(dif)}$	differential input voltage	peak-to-peak	1	-	2	V

© IDT 2012. All rights reserved.

Table 5. Static characteristics[1] *...continued*

Symbol	Parameter	Conditions	Min	Typ	Max	Unit
Voltage controlled regulator output: pin VCM						
$V_{O(cm)}$	common-mode output voltage		-	$0.5V_{DDA}$	-	V
$I_{O(cm)}$	common-mode output current		-	4	-	mA
Reference voltage input/output: pin VREF						
V_{VREF}	voltage on pin VREF	output	0.5	-	1	V
		input	0.5	-	1	V
Data outputs: pins CMLP, CMLN						
Output levels, $V_{DDD(1V8)}$ = 1.8 V; SWING_SEL[2:0] = 000						
V_{OL}	LOW-level output voltage	DC-coupled; output	-	1.5	-	V
		AC-coupled	-	1.35	-	V
V_{OH}	HIGH-level output voltage	DC-coupled; output	-	1.8	-	V
		AC-coupled	-	1.65	-	V
Output levels, $V_{DDD(1V8)}$ = 1.8 V; SWING_SEL[2:0] = 001						
V_{OL}	LOW-level output voltage	DC-coupled; output	-	1.45	-	V
		AC-coupled	-	1.275	-	V
V_{OH}	HIGH-level output voltage	DC-coupled; output	-	1.8	-	V
		AC-coupled	-	1.625	-	V
Output levels, $V_{DDD(1V8)}$ = 1.8 V; SWING_SEL[2:0] = 010						
V_{OL}	LOW-level output voltage	DC-coupled; output	-	1.4	-	V
		AC-coupled	-	1.2	-	V
V_{OH}	HIGH-level output voltage	DC-coupled; output	-	1.8	-	V
		AC-coupled	-	1.6	-	V
Output levels, $V_{DDD(1V8)}$ = 1.8 V; SWING_SEL[2:0] = 011						
V_{OL}	LOW-level output voltage	DC-coupled; output	-	1.35	-	V
		AC-coupled	-	1.125	-	V
V_{OH}	HIGH-level output voltage	DC-coupled; output	-	1.8	-	V
		AC-coupled	-	1.575	-	V
Output levels, $V_{DDD(1V8)}$ = 1.8 V; SWING_SEL[2:0] = 100						
V_{OL}	LOW-level output voltage	DC-coupled; output	-	1.3	-	V
		AC-coupled	-	1.05	-	V
V_{OH}	HIGH-level output voltage	DC-coupled; output	-	1.8	-	V
		AC-coupled	-	1.55	-	V
Serial configuration: pins SYNCP, SYNCN						
V_{IL}	LOW-level input voltage	differential; input	-	0.95	-	V
V_{IH}	HIGH-level input voltage	differential; input	-	1.47	-	V
Accuracy						
INL	integral non-linearity		−5	-	+5	LSB
DNL	differential non-linearity	guaranteed no missing codes	−0.95	±0.5	+0.95	LSB
E_{offset}	offset error		-	±2	-	mV

© IDT 2012. All rights reserved.

Table 5. Static characteristics[1] *...continued*

Symbol	Parameter	Conditions	Min	Typ	Max	Unit
E_G	gain error	full-scale	-	± 0.5	-	%
Supply						
PSRR	power supply rejection ratio	200 mV (p-p) on pin VDDA; f_i = DC	-	–54	-	dB

[1] Typical values measured at V_{DDA} = 3 V, $V_{DDD(1V8)}$ = 1.8 V, T_{amb} = 25 °C. Minimum and maximum values are across the full temperature range T_{amb} = –40 °C to +85 °C at V_{DDA} = 3 V, $V_{DDD(1V8)}$ = 1.8 V; $V_{i(INP)} - V_{i(INM)}$ = –1 dBFS; internal reference mode; 100 Ω differential applied to serial outputs; unless otherwise specified.

10. Dynamic characteristics

10.1 Dynamic characteristics

Table 6. Dynamic characteristics[1]

Symbol	Parameter	Conditions	Min	Typ	Max	Unit
α_{2H}	second harmonic level	f_i = 3 MHz	-	88	-	dBc
		f_i = 30 MHz	-	87	-	dBc
		f_i = 70 MHz	-	85	-	dBc
		f_i = 170 MHz	-	83	-	dBc
α_{3H}	third harmonic level	f_i = 3 MHz	-	87	-	dBc
		f_i = 30 MHz	-	86	-	dBc
		f_i = 70 MHz	-	84	-	dBc
		f_i = 170 MHz	-	82	-	dBc
THD	total harmonic distortion	f_i = 3 MHz	-	84	-	dBc
		f_i = 30 MHz	-	83	-	dBc
		f_i = 70 MHz	-	81	-	dBc
		f_i = 170 MHz	-	79	-	dBc
ENOB	effective number of bits	f_i = 3 MHz	-	10.7	-	bits
		f_i = 30 MHz	-	10.7	-	bits
		f_i = 70 MHz	-	10.7	-	bits
		f_i = 170 MHz	-	10.6	-	bits
SNR	signal-to-noise ratio	f_i = 3 MHz	-	66.2	-	dBFS
		f_i = 30 MHz	-	66.2	-	dBFS
		f_i = 70 MHz	-	66.0	-	dBFS
		f_i = 170 MHz	-	65.8	-	dBFS
SFDR	spurious-free dynamic range	f_i = 3 MHz	-	87	-	dBc
		f_i = 30 MHz	-	86	-	dBc
		f_i = 70 MHz	-	84	-	dBc
		f_i = 170 MHz	-	82	-	dBc

© IDT 2012. All rights reserved.

Table 6. Dynamic characteristics[1] *...continued*

Symbol	Parameter	Conditions	Min	Typ	Max	Unit
IMD	intermodulation distortion	f_i = 3 MHz	-	89	-	dBc
		f_i = 30 MHz	-	88	-	dBc
		f_i = 70 MHz	-	86	-	dBc
		f_i = 170 MHz	-	84	-	dBc
$\alpha_{ct(ch)}$	channel crosstalk	f_i = 70 MHz	-	100	-	dBc

[1] Typical values measured at V_{DDA} = 3 V, $V_{DDD(1V8)}$ = 1.8 V, T_{amb} = 25 °C. Minimum and maximum values are across the full temperature range T_{amb} = −40 °C to +85 °C at V_{DDA} = 3 V, $V_{DDD(1V8)}$ = 1.8 V; $V_{i(INP)} - V_{i(INM)}$ = −1 dBFS; internal reference mode; 100 Ω differential applied to serial outputs; unless otherwise specified.

10.2 Clock and digital output timing

Table 7. Clock and digital output characteristics[1]

Symbol	Parameter	Conditions	Min	Typ	Max	Unit
pins CLKP and CLKM						
f_{clk}	clock frequency		100	-	125	Msps
$t_{lat(data)}$	data latency time	clock cycles	160	-	170	ns
δ_{clk}	clock duty cycle	DCS_EN = logic 1	30	50	70	%
$t_{d(s)}$	sampling delay time		-	0.8	-	ns
t_{wake}	wake-up time		-	76	-	μs

[1] Typical values measured at V_{DDA} = 3 V, $V_{DDD(1V8)}$ = 1.8 V, T_{amb} = 25 °C. Minimum and maximum values are across the full temperature range T_{amb} = −40 °C to +85 °C at V_{DDA} = 3 V, $V_{DDD(1V8)}$ = 1.8 V; $V_{i(INP)} - V_{i(INM)}$ = −1 dBFS; internal reference mode; 100 Ω differential applied to serial outputs; unless otherwise specified.

© IDT 2012. All rights reserved.

10.3 Serial output timing

The eye diagram of the serial output is shown in Figure 3 and Figure 4. Test conditions are:

- 3.125 Gbps data rate
- T_{amb} = 25 °C
- DC-coupling with two different receiver common-mode voltages

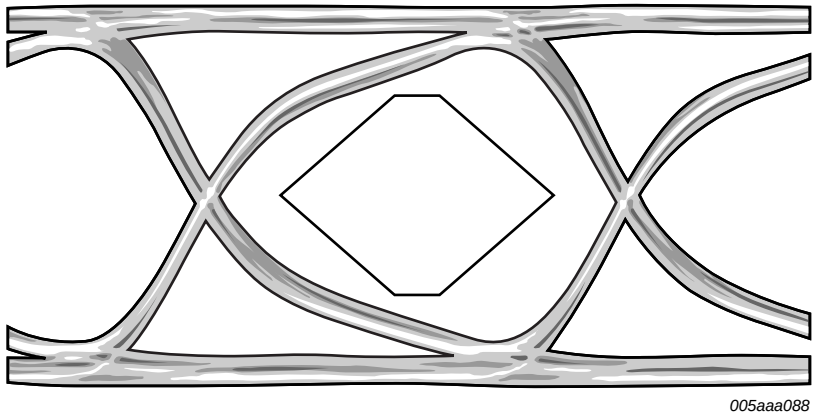

Fig 3. Eye diagram at 1 V receiver common-mode

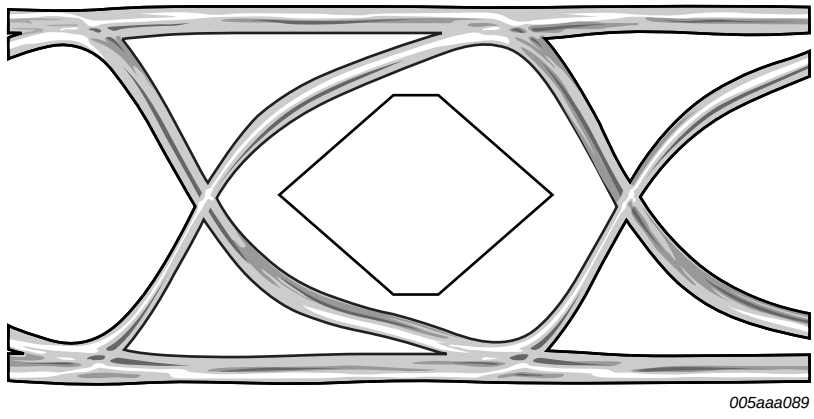

Fig 4. Eye diagram at 2 V receiver common-mode

© IDT 2012. All rights reserved.

10.4 SPI timing

Table 8. SPI timing characteristics[1]

Symbol	Parameter	Conditions	Min	Typ	Max	Unit
$t_{w(SCLK)}$	SCLK pulse width		-	40	-	ns
$t_{w(SCLKH)}$	SCLK HIGH pulse width		-	16	-	ns
$t_{w(SCLKL)}$	SCLK LOW pulse width		-	16	-	ns
t_{su}	set-up time	data to SCLK HIGH	-	5	-	ns
		$\overline{CS}$ to SCLK HIGH	-	5	-	ns
t_h	hold time	data to SCLK HIGH	-	2	-	ns
		$\overline{CS}$ to SCLK HIGH22	-	2	-	ns
$f_{clk(max)}$	maximum clock frequency		-	25	-	MHz

[1] Typical values measured at V_{DDA} = 3 V, $V_{DDD(1V8)}$ = 1.8 V, T_{amb} = 25 °C. Minimum and maximum values are across the full temperature range T_{amb} = −40 °C to +85 °C at V_{DDA} = 3 V, $V_{DDD(1V8)}$ = 1.8 V; $V_{i(INP)} - V_{i(INM)}$ = −1 dBFS; internal reference mode; 100 Ω differential applied to serial outputs; unless otherwise specified.

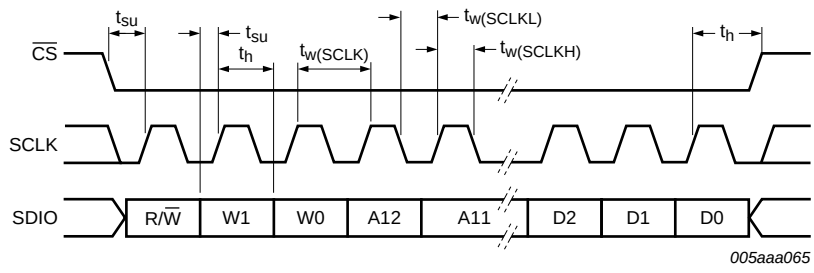

Fig 5. SPI timing

© IDT 2012. All rights reserved.

11. Application information

11.1 Analog inputs

11.1.1 Input stage description

The analog input of the ADC1113S supports a differential or a single-ended input drive. Optimal performance is achieved using differential inputs with the common-mode input voltage ($V_{I(cm)}$) on pins INP and INM set to $0.5V_{DDA}$.

The full-scale analog input voltage range is configurable between 1 V (p-p) and 2 V (p-p) via a programmable internal reference (see Section 11.2 and Table 21).

Figure 6 shows the equivalent circuit of the sample-and-hold input stage, including ElectroStatic Discharge (ESD) protection and circuit and package parasitics.

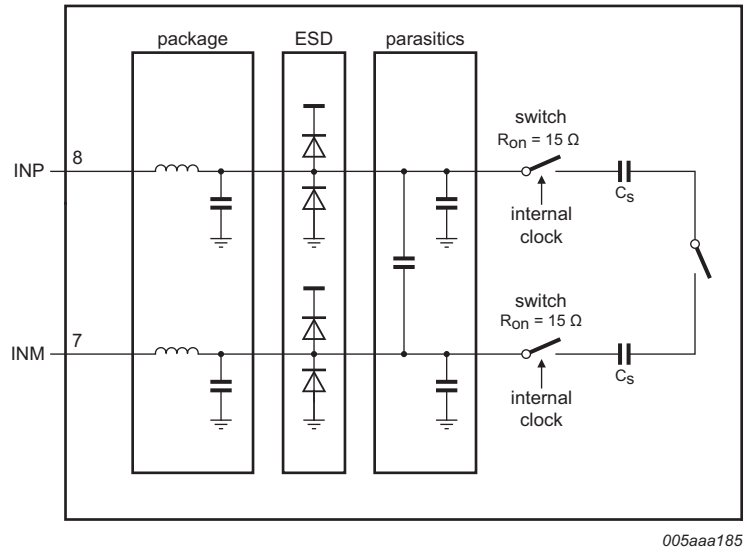

Fig 6. Input sampling circuit

The sample phase occurs when the internal clock (derived from the clock signal on pin CLKP/CLKM) is HIGH. The voltage is then held on the sampling capacitors. When the clock signal goes LOW, the stage enters the hold phase and the voltage information is transmitted to the ADC core.

11.1.2 Anti-kickback circuitry

Anti-kickback circuitry (RC filter in Figure 7) is needed to counteract the effects of a charge injection generated by the sampling capacitance.

The RC filter is also used to filter noise from the signal before it reaches the sampling stage. The value of the capacitor should be chosen to maximize noise attenuation without degrading the settling time excessively.

© IDT 2012. All rights reserved.

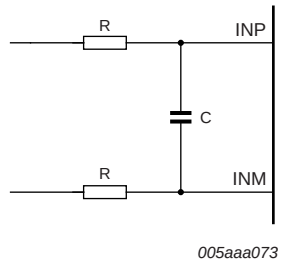

Fig 7. Anti-kickback circuit

The component values are determined by the input frequency and should be selected so as not to affect the input bandwidth.

Table 9. RC-coupling versus input frequency, typical values

Input frequency (MHz)	Resistance (Ω)	Capacitance (pF)
3	25	12
70	12	8
170	12	8

11.1.3 Transformer

The configuration of the transformer circuit is determined by the input frequency. The configuration shown in Figure 8 would be suitable for a baseband application.

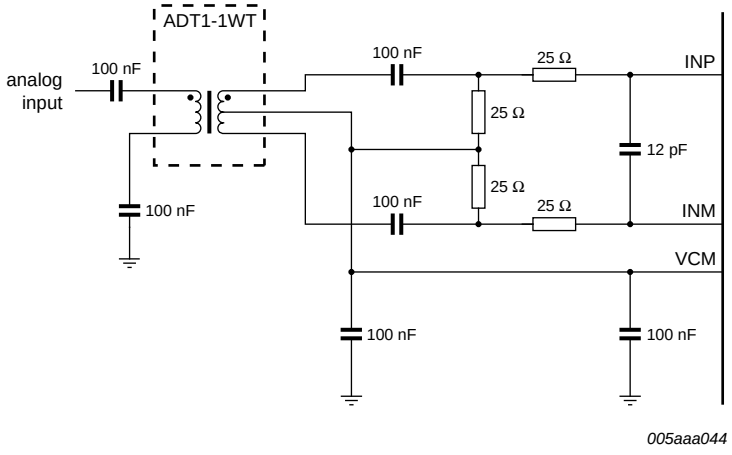

Fig 8. Single transformer configuration

© IDT 2012. All rights reserved.

The configuration shown in Figure 9 is recommended for high frequency applications. In both cases, the choice of transformer is a compromise between cost and performance.

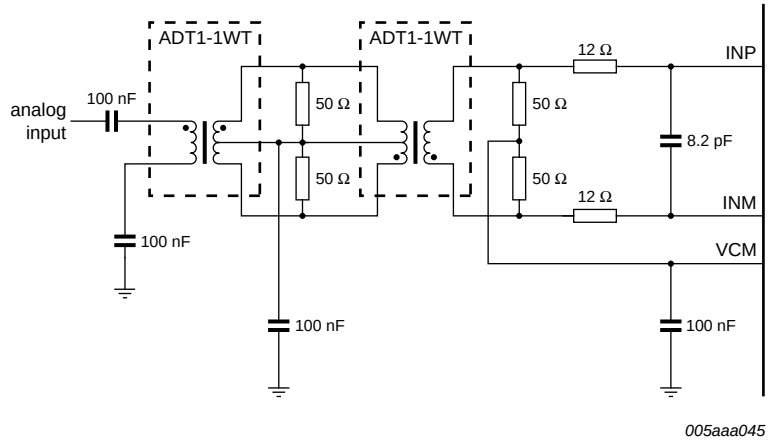

Fig 9. Dual transformer configuration

11.2 System reference and power management

11.2.1 Internal/external reference

The ADC1113S has a stable and accurate built-in internal reference voltage to adjust the ADC full-scale. This reference voltage can be set internally via SPI or with pins VREF and SENSE (see Figure 11 to Figure 14), in 1 dB steps between 0 dB and −6 dB, via SPI control bits INTREF[2:0] (when bit INTREF_EN = logic 1; see Table 21). The equivalent reference circuit is shown in Figure 10. An external reference is also possible by providing a voltage on pin VREF as described in Figure 14.

© IDT 2012. All rights reserved.

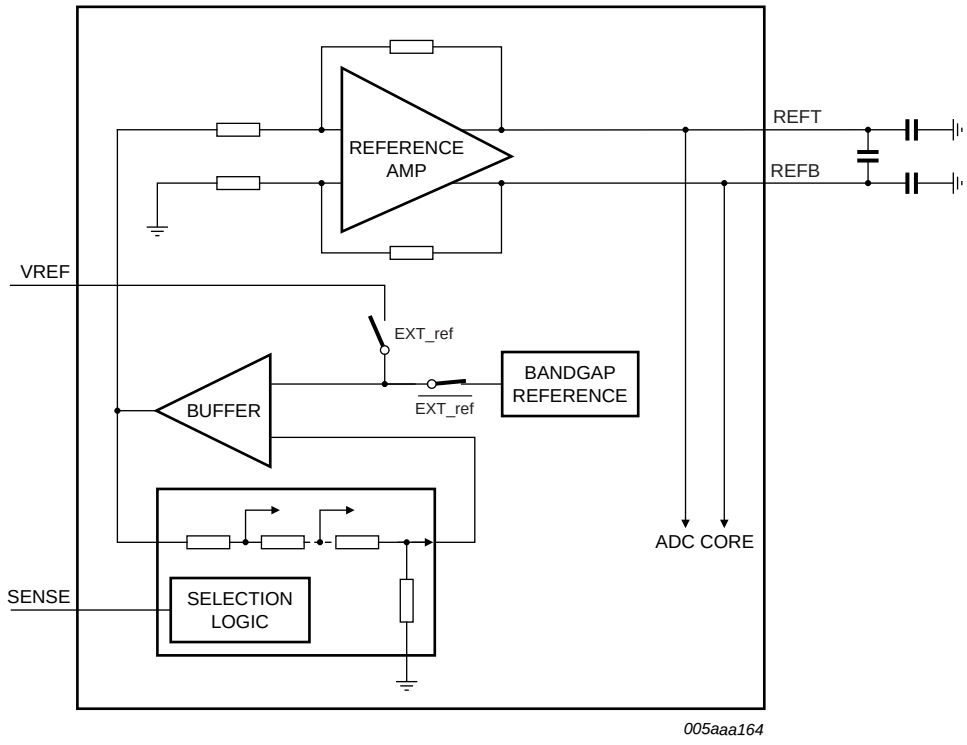

Fig 10. Reference equivalent schematic

If bit INTREF_EN is set to logic 0, the reference voltage is determined either internally or externally as detailed in Table 10.

Table 10. Reference modes

Mode	SPI bit, "Internal reference"	SENSE pin	VREF pin	Full-scale (V (p-p))
Internal (Figure 11)	0	GND	330 pF capacitor to GND	2
Internal (Figure 12)	0	VREF pin = SENSE pin and 330 pF capacitor to GND		1
Internal, SPI mode (Figure 12)	1	VREF pin = SENSE pin and 330 pF capacitor to GND		1 to 2
External (Figure 14)	0	V_{DDA}	external voltage from 0.5 V to 1 V	1 to 2

Figure 11 to Figure 14 illustrate how to connect the SENSE and VREF pins to select the required reference voltage source.

© IDT 2012. All rights reserved.

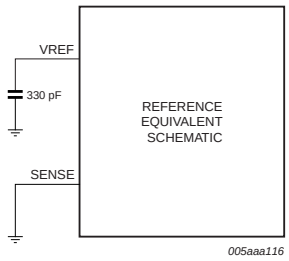

Fig 11. Internal reference, 2 V (p-p) full-scale

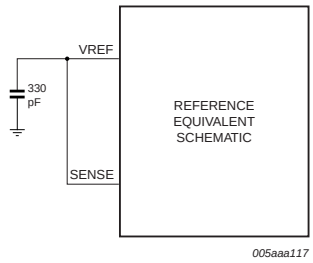

Fig 12. Internal reference, 1 V (p-p) full-scale

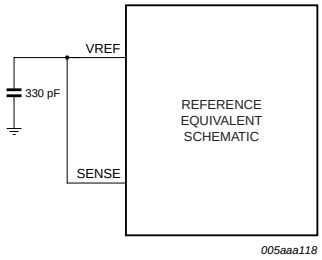

Fig 13. Internal reference via SPI, 1 V (p-p) to 2 V (p-p) full-scale

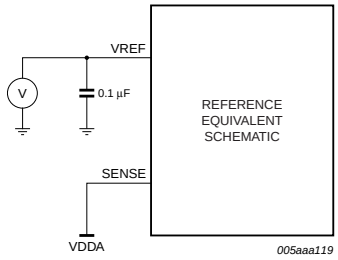

Fig 14. External reference, 1 V (p-p) to 2 V (p-p) full-scale

11.2.2 Programmable full-scale

The full-scale is programmable between 1 V (p-p) to 2 V (p-p) (see Table 11).

Table 11. Reference SPI gain control

INTREF[2:0]	Level (dB)	Full-scale (V (p-p))
000	0	2
001	–1	1.78
010	–2	1.59
011	–3	1.42
100	–4	1.26
101	–5	1.12
110	–6	1
111	not used	x

11.2.3 Common-mode output voltage ($V_{O(cm)}$)

An 0.1 µF filter capacitor should be connected between pin VCM and ground to ensure a low-noise common-mode output voltage. When AC-coupled, this pin can be used to set the common-mode reference for the analog inputs, for instance via a transformer middle point.

© IDT 2012. All rights reserved.

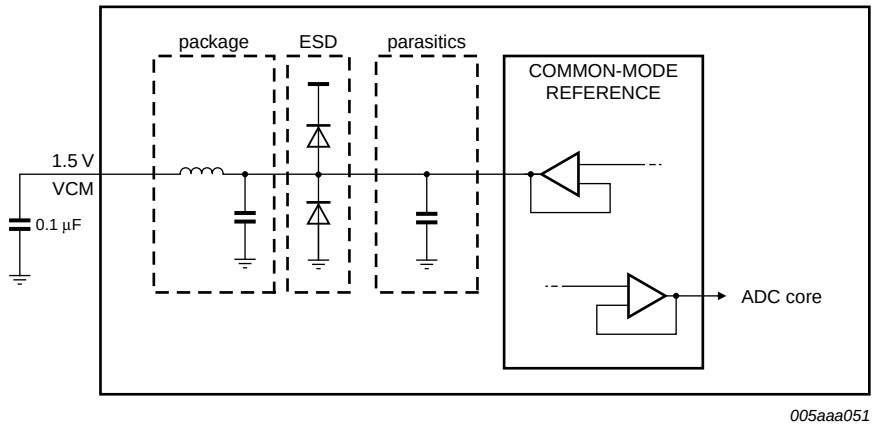

Fig 15. Reference equivalent schematic

11.2.4 Biasing

The common-mode input voltage ($V_{I(cm)}$) on pins INP and INM should be set externally to $0.5V_{DDA}$ for optimal performance and should always be between 0.9 V and 2 V.

11.3 Clock input

11.3.1 Drive modes

The ADC11113S125 can be driven differentially (LVPECL). It can also be driven by a single-ended LVCMOS signal connected to pin CLKP (CLKM should be connected to ground via a capacitor).

a. Rising edge LVCMOS

b. Falling edge LVCMOS

Fig 16. LVCMOS single-ended clock input

© IDT 2012. All rights reserved.

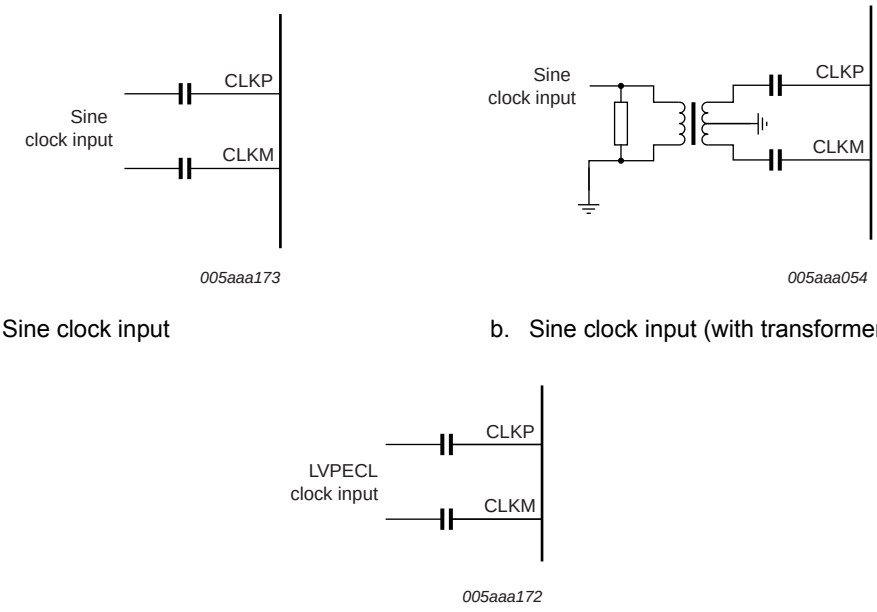

a. Sine clock input

b. Sine clock input (with transformer)

c. LVPECL clock input

Fig 17. Differential clock input

11.3.2 Equivalent input circuit

The equivalent circuit of the input clock buffer is shown in Figure 18. The common-mode voltage of the differential input stage is set via internal 5 kΩ resistors.

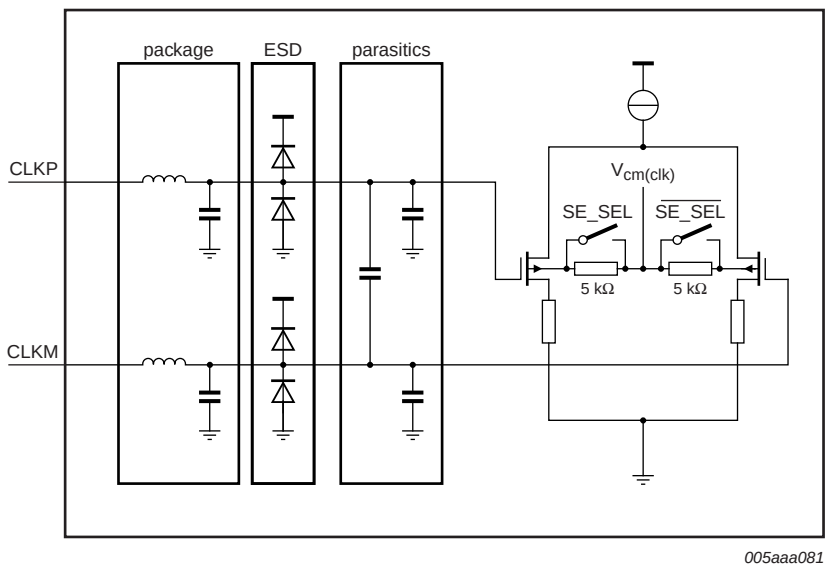

$V_{cm(clk)}$ = common-mode voltage of the differential input stage.

Fig 18. Equivalent input circuit

© IDT 2012. All rights reserved.

Single-ended or differential clock inputs can be selected via the SPI (see Table 20). If single-ended is selected, the input pin (CLKM or CLKP) is selected via control bit SE_SEL.

If single-ended is implemented without setting bit SE_SEL accordingly, the unused pin should be connected to ground via a capacitor.

11.3.3 Duty cycle stabilizer

The duty cycle stabilizer can improve the overall performance of the ADC by compensating the input clock signal duty cycle. When the duty cycle stabilizer is active (bit DCS_EN = logic 1; see Table 20), the circuit can handle signals with duty cycles of between 30 % and 70 % (typical). When the duty cycle stabilizer is disabled (DCS_EN = logic 0), the input clock signal should have a duty cycle of between 45 % and 55 %.

Table 12. Duty cycle stabilizer

Bit DCS_EN	Description
0	duty cycle stabilizer disable
1	duty cycle stabilizer enable

11.3.4 Clock input divider

The ADC1113S contains an input clock divider that divides the incoming clock by a factor of 2 (when bit CLKDIV2_SEL = logic 1; see Table 20). This feature allows the user to deliver a higher clock frequency with better jitter performance, leading to a better SNR result once acquisition has been performed.

11.4 Digital outputs

11.4.1 Serial output equivalent circuit

The JESD204A standard specifies that if the receiver and the transmitter are DC-coupled, both must be fed from the same supply.

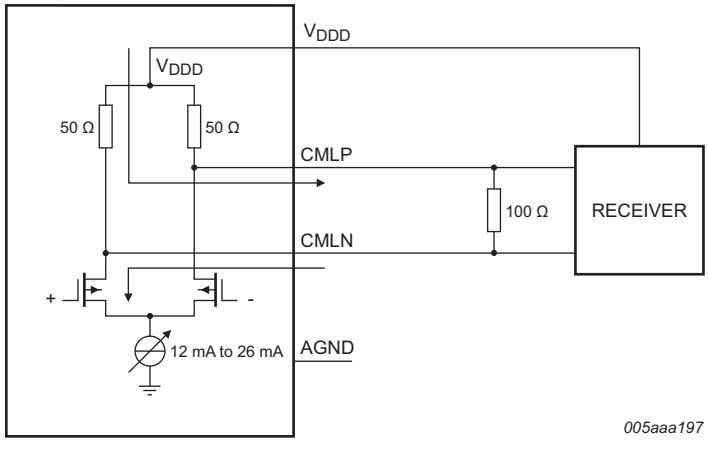

Fig 19. CML output connection to the receiver (DC-coupled)

The output should be terminated when 100 Ω (typical) is reached at the receiver side.

© IDT 2012. All rights reserved.

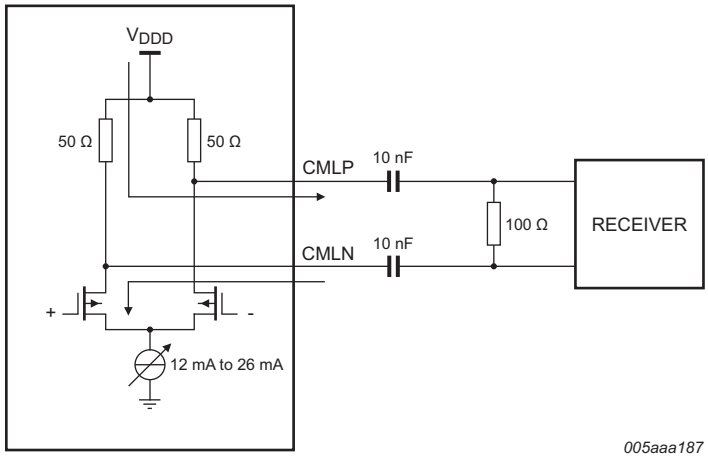

Fig 20. CML output connection to the receiver (AC-coupled)

11.5 JESD204A serializer

For more information about the JESD204A standard refer to the JEDEC web site.

11.5.1 Digital JESD204A formatter

The block placed after the ADC core is used to implement all functions of the JESD204A standard. This ensures signal integrity and guarantees the clock and the data recovery at the receiver side.

The block is highly parameterized and can be configured in various ways depending on the sampling frequency and the number of lanes used.

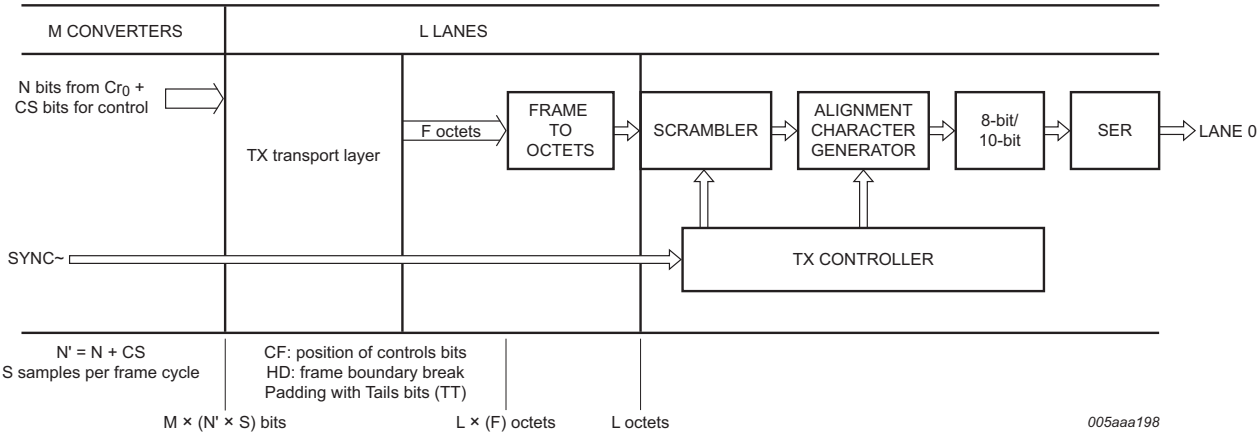

Fig 21. General overview of the JESD204A serializer

© IDT 2012. All rights reserved.

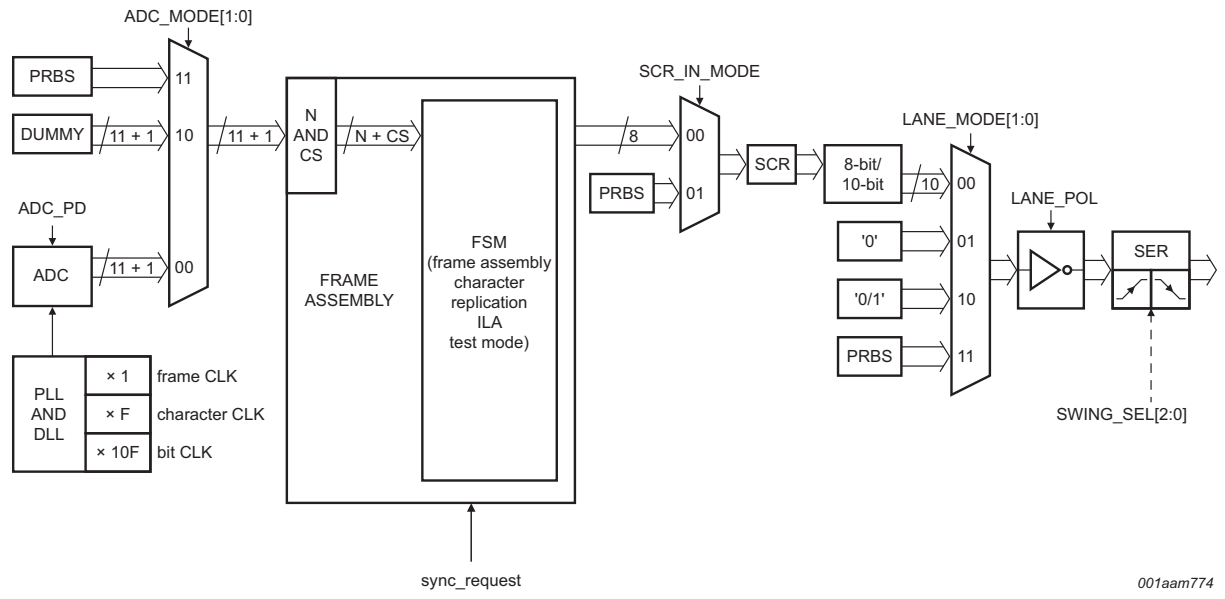

Fig 22. Detailed view of the JESD204A serializer with debug functionality

11.5.2 ADC core output codes versus input voltage

Table 13 shows the data output codes for a given analog input voltage.

Table 13. Output codes versus input voltage

INP – INM (V)	Offset binary	Two's complement	OTR
< –1	000 0000 0000	100 0000 0000	1
–1.0000000	000 0000 0000	100 0000 0000	0
–0.9990234	000 0000 0001	100 0000 0001	0
–0.9980469	000 0000 0010	100 0000 0010	0
–0.9970703	000 0000 0011	100 0000 0011	0
–0.996093	000 0000 0100	100 0000 0100	0
....	....	....	0
–0.0019531	011 1111 1110	111 1111 1110	0
–0.0009766	011 1111 1111	111 1111 1111	0
0.0000000	100 0000 0000	000 0000 0000	0
+0.0009766	100 0000 0001	000 0000 0001	0
+0.0019531	100 0000 0010	000 0000 0010	0
....	....	....	0
+0.9970703	111 1111 1011	011 1111 1011	0
+0.99990845	111 1111 1100	011 1111 1100	0
+0.9980469	111 1111 1101	011 1111 1101	0
+0.9990234	111 1111 1110	011 1111 1110	0
+1.0000000	111 1111 1111	011 1111 1111	0
> +1	111 1111 1111	011 1111 1111	1

© IDT 2012. All rights reserved.

11.6 Serial Peripheral Interface (SPI)

11.6.1 Register description

The ADC1113S serial interface is a synchronous serial communications port allowing for easy interfacing with many industry microprocessors. It provides access to the registers that control the operation of the chip in both read and write modes.

This interface is configured as a 3-wire type (SDIO as bidirectional pin).

Pin SCLK acts as the serial clock and pin $\overline{CS}$ acts as the serial chip select.

Each read/write operation is sequenced by the $\overline{CS}$ signal and enabled by a LOW level to to drive the chip with N bytes, depending on the content of the instruction byte (see Table 14).

Table 14. SPI instruction bytes

	MSB							LSB
Bit	7	6	5	4	3	2	1	0
Description	R/W[1]	W1	W0	A12	A11	A10	A9	A8
	A7	A6	A5	A4	A3	A2	A1	A0

[1] R/W indicates whether a read (logic 1) or write (logic 0) transfer occurs after the instruction byte.

Table 15. Read or Write mode access description

R/W[1]	Description
0	Write mode operation
1	Read mode operation

[1] Bits W1 and W0 indicate the number of bytes transferred.

Table 16. Number of bytes to be transferred

W1	W0	Number of bytes transferred
0	0	1 byte
0	1	2 bytes
1	0	3 bytes
1	1	4 or more bytes

Bits A12 to A0 indicate the address of the register being accessed. In the case of a multiple byte transfer, this address is the first register to be accessed. An address counter is incremented to access subsequent addresses.

The steps involved in a data transfer are as follows:

1. The falling edge on pin $\overline{CS}$ in combination with a rising edge on pin SCLK determine the start of communications.
2. The first phase is the transfer of the 2-byte instruction.
3. The second phase is the transfer of the data which can vary in length but is always a multiple of 8 bits. The Most Significant Bit (MSB) is always sent first (for instruction and data bytes)
4. A rising edge on pin $\overline{CS}$ indicates the end of data transmission.

© IDT 2012. All rights reserved.

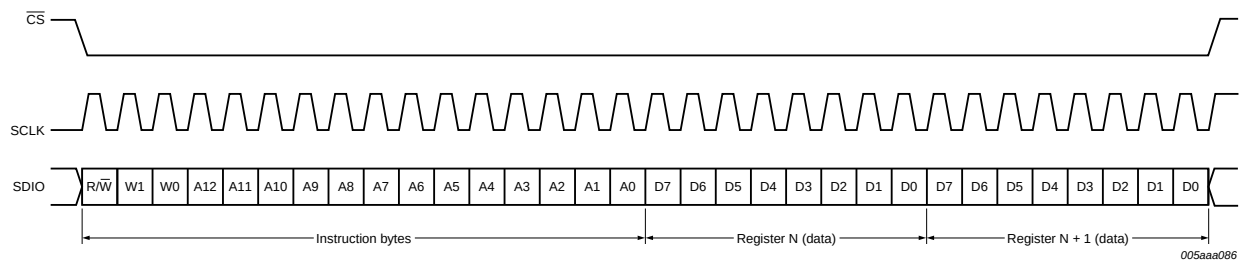

Fig 23. Transfer diagram for two data bytes (3-wire type)

© IDT 2012. All rights reserved.

11.6.2 Channel control

Table 17. Register allocation map

Address (hex)	Register name	Access[1]	Bit definition								Default[2] (bin)
			Bit 7	Bit 6	Bit 5	Bit 4	Bit 3	Bit 2	Bit 1	Bit 0	
ADC control register											
0003	SPI control	R/W	-	-	-	-	-	-	ENABLE	-	1111 1111
0005	Reset and Power-down modes	R/W	SW_RST	-	-	-	-	-	PD[1:0]		0000 0000
0006	Clock	R/W	-	-	-	SE_SEL	DIFF_SE	-	CLKDIV2_SEL	DCS_EN	0000 000*
0008	Vref	R/W	-	-	-	-	INTREF_EN	INTREF[2:0]			0000 0000
0013	Offset	R/W	-	-	DIG_OFFSET[5:0]						0000 0000
0014	Test pattern 1	R/W	-	-	-	-	-	TESTPAT_1[2:0]			0000 0000
0015	Test pattern 2	R/W	TESTPAT_2[10:3]								0000 0000
0016	Test pattern 3	R/W	TESTPAT_3[2:0]			-	-	-	-	-	0000 0000
JESD204A control											
0801	Ser_Status	R	RXSYNC_ERROR	RESERVED[2:0]			0	0	POR_TST	RESERVED	0001 0000
0802	Ser_Reset	R/W	SW_RST	0	0	0	FSM_SW_RST	0	0	0	0000 0000
0805	Ser_Control1	R/W	0	RESERVED	SYNC_POL	SYNC_SINGLE_ENDED	1	REV_SCR	REV_ENCODER	REV_SERIAL	0100 1001
0808	Ser_Analog_Ctrl	R/W	0	0	0	0	0	SWING_SEL[2:0]			0000 0011
0809	Ser_ScramblerA	R/W	0	LSB_INIT[6:0]							0000 0000

© IDT 2012. All rights reserved.

Table 17. Register allocation map *...continued*

Address (hex)	Register name	Access[1]	Bit definition								Default[2] (bin)
			Bit 7	Bit 6	Bit 5	Bit 4	Bit 3	Bit 2	Bit 1	Bit 0	
080A	Ser_ScramblerB	R/W	MSB_INIT[7:0]								1111 1111
080B	Ser_PRBS_Ctrl	R/W	0	0	0	0	0	0	PRBS_TYPE[1:0]		0000 0000
0820	Cfg_0_DID	R	DID[7:0]								1110 1101
0821	Cfg_1_BID	R/W*	0	0	0	0	BID[3:0]				0000 1010
0822	Cfg_3_SCR_L	R/W*	SCR	0	0	0	0	0	0	L	0000 0000
0823	Cfg_4_F	R/W*	0	0	0	0	0	F[2:0]			0000 0***
0824	Cfg_5_K	R/W*	0	0	0	K[4:0]					000* ****
0825	Cfg_6_M	R/W*	0	0	0	0	0	0	0	M	0000 000*
0826	Cfg_7_CS_N	R/W*	0	CS[0]	0	0	N[3:0]				0100 0001
0827	Cfg_8_Np	R/W	0	0	0	NP[4:0]					0000 1111
0828	Cfg_9_S	R/W*	0	0	0	0	0	0	0	S	0000 0000
0829	Cfg_10_HD_CF	R/W*	HD	0	0	0	0	0	CF[1:0]		*000 0000
082D	Cfg_02_2_LID	R/W*	0	0	0	LID[4:0]					0001 1100
084D	Cfg02_13_FCHK	R	FCHK[7:0]								**** ****
0871	Lane_0_Ctrl	R/W	0	SCR_IN_ MODE	LANE_MODE[1:0]		0	LANE_ POL	RESERVED	LANE_PD	0000 0000
0891	ADC_0_Ctrl	R/W	0	0	ADC_MODE[1:0]		0	0	0	ADC_PD	0000 0000

[1] An "*" in the R/W column means that this register is subject to control access conditions in Write mode.

[2] An "*" in the Default column replaces a bit whose value depends on the binary level of external pins.

© IDT 2012. All rights reserved.

11.6.3 Register description

11.6.3.1 ADC control registers

Table 18. Register SPI control (address 0003h)
Default values are highlighted.

Bit	Symbol	Access	Value	Description
7 to 2	-	-	111111	not used
1	ENABLE	R/W		ADC SPI control enable:
			0	ADC does not get the next SPI command
			1	**ADC gets the next SPI command**
0	-	-	1	not used

Table 19. Register Reset and Power-down mode (address 0005h)
Default values are highlighted.

Bit	Symbol	Access	Value	Description
7	SW_RST	R/W		reset digital part:
			0	**no reset**
			1	performs a reset of the digital part
6 to 2	-	-	00000	not used
1 to 0	PD[1:0]	R/W		Power-down mode:
			00	**normal (power-up)**
			01	full power-down
			10	sleep
			11	normal (power-up)

Table 20. Register Clock (address 0006h)
Default values are highlighted.

Bit	Symbol	Access	Value	Description
7 to 5	-	-	000	not used
4	SE_SEL	R/W		select SE clock input pin:
			0	**select CLKM input**
			1	select CLKP input
3	DIFF_SE	R/W		differential/single-ended clock input select:
			0	**fully differential**
			1	single-ended
2	-	-	0	not used
1	CLKDIV2_SEL	R/W		select clock input divider by 2:
			0	**disable**
			1	enable
0	DCS_EN	R/W		duty cycle stabilizer enable:
			0	disable
			1	enable

© IDT 2012. All rights reserved.

Table 21. Register Vref (address 0008h)
Default values are highlighted.

Bit	Symbol	Access	Value	Description
7 to 4	-	-	0000	not used
3	INTREF_EN	R/W		enable internal programmable VREF mode:
			0	**disable**
			1	enable
2 to 0	INTREF[2:0]	R/W		programmable internal reference:
			000	**0 dB (FS = 2 V)**
			001	–1 dB (FS = 1.78 V)
			010	–2 dB (FS = 1.59 V)
			011	–3 dB (FS = 1.42 V)
			100	–4 dB (FS = 1.26 V)
			101	–5 dB (FS = 1.12 V)
			110	–6 dB (FS = 1 V)
			111	not used

Table 22. Digital offset adjustment (address 0013h)
Default values are highlighted.

Register offset		
Decimal	**DIG_OFFSET[5:0]**	
+31	011111	+31 LSB
...	...	...
0	**000000**	0
...	...	...
–32	100000	–32 LSB

Table 23. Register Test pattern 1 (address 0014h)
Default values are highlighted.

Bit	Symbol	Access	Value	Description
7 to 3	-	-	00000	not used
2 to 0	TESTPAT_1[2:0]	R/W		digital test pattern:
			000	**off**
			001	mid-scale
			010	– FS
			011	+ FS
			100	toggle ‘1111..1111’/’0000..0000’
			101	custom test pattern, to be written in register 0015h and 0016h
			110	‘010101...’
			111	‘101010...’

© IDT 2012. All rights reserved.

Table 24. Register Test pattern 2 (address 0015h)
Default values are highlighted.

Bit	Symbol	Access	Value	Description
7 to 0	TESTPAT_2[10:3]	R/W	**00000000**	**custom digital test pattern (bit 10 to 3)**

Table 25. Register Test pattern 3 (address 0016h)
Default values are highlighted.

Bit	Symbol	Access	Value	Description
7 to 5	TESTPAT_3[2:0]	R/W	**000**	**custom digital test pattern (bit 2 to 0)**
4 to 0	-	-	00000	not used

11.6.4 JESD204A digital control registers

Table 26. Ser_Status (address 0801h)
Default values are highlighted.

Bit	Symbol	Access	Value	Description
7	RXSYNC_ERROR	R	0	set to 1 when a synchronization error occurs
6 to 4	RESERVED[2:0]	-	001	reserved
3 to 2	-	-	00	not used
1	POR_TST	R	**0**	**power-on-reset**
0	RESERVED	-	0	reserved

Table 27. Ser_Reset (address 0802h)
Default values are highlighted.

Bit	Symbol	Access	Value	Description
7	SW_RST	R/W	**0**	**initiates a software reset of the JESD204A unit**
6 to 4	-	-	000	not used
3	FSM_SW_RST	R/W	**0**	**initiates a software reset of the internal state machine of JESD204A unit**
2 to 0	-	-	000	not used

Table 28. Ser_Control1 (address 0805h)
Default values are highlighted.

Bit	Symbol	Access	Value	Description
7	-	-	0	not used
6	RESERVED	-	1	reserved
5	SYNC_POL	R/W		defines the synchronization signal polarity:
			0	**synchronization signal is active LOW**
			1	synchronization signal is active HIGH
4	SYNC_SINGLE_ENDED	R/W		defines the input mode of the synchronization signal:
			0	**synchronization input mode is set in Differential mode**
			1	synchronization input mode is set in Single-ended mode
3	-	-	1	not used
2	REV_SCR	-		LSBs are swapped with MSBs at the scrambler input:
			0	**disable**
			1	enable

© IDT 2012. All rights reserved.

Table 28. Ser_Control1 (address 0805h) *...continued*
Default values are highlighted.

Bit	Symbol	Access	Value	Description
1	REV_ENCODER	-		LSBs are swapped with MSBs at the 8-bit/10-bit encoder input:
			0	**disable**
			1	enable
0	REV_SERIAL	-		LSBs are swapped with MSBs at the lane input:
			0	disable
			1	**enable**

Table 29. Ser_Analog_Ctrl (address 0808h)
Default values are highlighted.

Bit	Symbol	Access	Value	Description
7 to 3	-	-	00000	not used
2 to 0	SWING_SEL[2:0]	R/W	**011**	**defines the swing output for the lane pads**

Table 30. Ser_ScramblerA (address 0809h)
Default values are highlighted.

Bit	Symbol	Access	Value	Description
7	-	-	0	not used
6 to 0	LSB_INIT[6:0]	R/W	**0000000**	**defines the initialization vector for the scrambler polynomial (lower)**

Table 31. Ser_ScramblerB (address 080Ah)
Default values are highlighted.

Bit	Symbol	Access	Value	Description
7 to 0	MSB_INIT[7:0]	R/W	**11111111**	**defines the initialization vector for the scrambler polynomial (upper)**

Table 32. Ser_PRBS_Ctrl (address 080Bh)
Default values are highlighted.

Bit	Symbol	Access	Value	Description
7 to 2	-	-	000000	not used
1 to 0	PRBS_TYPE[1:0]	R/W		defines the type of Pseudo-Random Binary Sequence (PRBS) generator to be used:
			00 (reset)	**PRBS-7**
			01	PRBS-7
			10	PRBS-23
			11	PRBS-31

Table 33. Cfg_0_DID (address 0820h)
Default values are highlighted.

Bit	Symbol	Access	Value	Description
7 to 0	DID[7:0]	R	**11101101**	**defines the device (= link) identification number**

© IDT 2012. All rights reserved.

Table 34. Cfg_1_BID (address 0821h)
Default values are highlighted.

Bit	Symbol	Access	Value	Description
7 to 4	-	-	0000	not used
3 to 0	BID[3:0]	R/W	**1010**	**defines the bank ID – extension to DID**

Table 35. Cfg_3_SCR_L (address 0822h)
Default values are highlighted.

Bit	Symbol	Access	Value	Description
7	SCR	R/W	0	scrambling enabled
6 to 1	-	-	000000	not used
0	L	R/W	0	defines the number of lanes per converter device, minus 1

Table 36. Cfg_4_F (address 0823h)
Default values are highlighted.

Bit	Symbol	Access	Value	Description
7 to 3	-	-	00000	not used
2 to 0	F[2:0]	R/W	***	defines the number of octets per frame, minus 1

Table 37. Cfg_5_K (address 0824h)
Default values are highlighted.

Bit	Symbol	Access	Value	Description
7 to 5	-	-	000	not used
4 to 0	K[4:0]	R/W	*****	defines the number of frames per multiframe, minus 1

Table 38. Cfg_6_M (address 0825h)
Default values are highlighted.

Bit	Symbol	Access	Value	Description
7 to 1	-	-	0000000	not used
0	M	R/W	*	defines the number of converters per device, minus 1

Table 39. Cfg_7_CS_N (address 0826h)
Default values are highlighted.

Bit	Symbol	Access	Value	Description
7	-	-	0	not used
6	CS[0]	R/W	1	defines the number of control bits per sample, minus 1
5 to 4	-	-	00	not used
3 to 0	N[3:0]	R/W	0001	defines the converter resolution

Table 40. Cfg_8_Np (address 0827h)
Default values are highlighted.

Bit	Symbol	Access	Value	Description
7 to 5	-	-	000	not used
4 to 0	NP[4:0]	R/W	01111	defines the total number of bits per sample, minus 1

© IDT 2012. All rights reserved.

Table 41. Cfg_9_S (address 0828h)
Default values are highlighted.

Bit	Symbol	Access	Value	Description
7 to 1	-	-	0000000	not used
0	S	R/W	**0**	**defines number of samples per converter per frame cycle**

Table 42. Cfg_10_HD_CF (address 0829h)
Default values are highlighted.

Bit	Symbol	Access	Value	Description
7	HD	R/W	*	defines high density format
6 to 2	-	-	00000	not used
1 to 0	CF[1:0]	R/W	00	defines number of control words per frame clock cycle per link.

Table 43. Cfg_02_2_LID (address 082Dh)
Default values are highlighted.

Bit	Symbol	Access	Value	Description
7 to 5	-	-	000	not used
4 to 0	LID[4:0]	R/W	**11100**	**defines lane identification number**

Table 44. Cfg02_13_FCHK (address 084Dh)
Default values are highlighted.

Bit	Symbol	Access	Value	Description
7 to 0	FCHK[7:0]	R	********	defines the checksum value for lane checksum corresponds to the sum of all the link configuration parameters module 256 (as defined in JEDEC Standard No.204A)

Table 45. Lane_0_Ctrl (address 0871h)
Default values are highlighted.

Bit	Symbol	Access	Value	Description
7	-	-	0	not used
6	SCR_IN_MODE	R/W		defines the input type for scrambler and 8-bit/10-bit units
			0 (reset)	**(normal mode) = input of the scrambler and 8-bit/10-bit units is the output of the frame assembly unit.**
			1	input of the scrambler and 8-bit/10-bit units is the PRBS generator (PRBS type is defined with “PRBS_TYPE[1:0]” (Ser_PRBS_Ctrl register)
5 to 4	LANE_MODE[1:0]	R/W		defines output type of lane output unit:
			00 (reset)	**normal mode: lane output is the 8-bit/10-bit output unit**
			01	constant mode: lane output is set to a constant (0 × 0)
			10	toggle mode: lane output is toggling between 0 × 0 and 0 × 1
			11	PRBS mode: lane output is the PRBS generator (PRBS type is defined with “PRBS_TYPE[1:0]” (Ser_PRBS_Ctrl register)
3	-	-	0	not used

© IDT 2012. All rights reserved.

Table 45. Lane_0_Ctrl (address 0871h) *...continued*
Default values are highlighted.

Bit	Symbol	Access	Value	Description
2	LANE_POL	R/W		defines lane polarity:
			0	**lane polarity is normal**
			1	lane polarity is inverted
1	RESERVED	R/W	**0**	reserved
0	LANE_PD	R/W		lane power-down control:
			0	**lane is operational**
			1	lane is in Power-down mode

Table 46. ADC_0_Ctrl (address 0891h)
Default values are highlighted.

Bit	Symbol	Access	Value	Description
7 to 6	-	-	00	not used
5 to 4	ADC_MODE[1:0]	R/W		defines input type of JESD204A unit
			00 (reset)	**ADC output is connected to the JESD204A input**
			01	not used
			10	JESD204A input is fed with a dummy constant, set to: OTR = 0 and ADC[13:0] = “10011011101010”
			11	JESD204A is fed with a PRBS generator (PRBS type is defined with “PRBS_TYPE[1:0]” (Ser_PRBS_Ctrl register)
3 to 1	-	-	000	not used
0	ADC_PD	R/W		ADC power-down control:
			0	**ADC is operational**
			1	ADC is in Power-down mode

© IDT 2012. All rights reserved.

12. Package outline

HVQFN32R: plastic thermal enhanced very thin quad flat package; no leads; 32 terminals; resin based; body 7 x 7 x 0.8 mm **SOT1152-1**

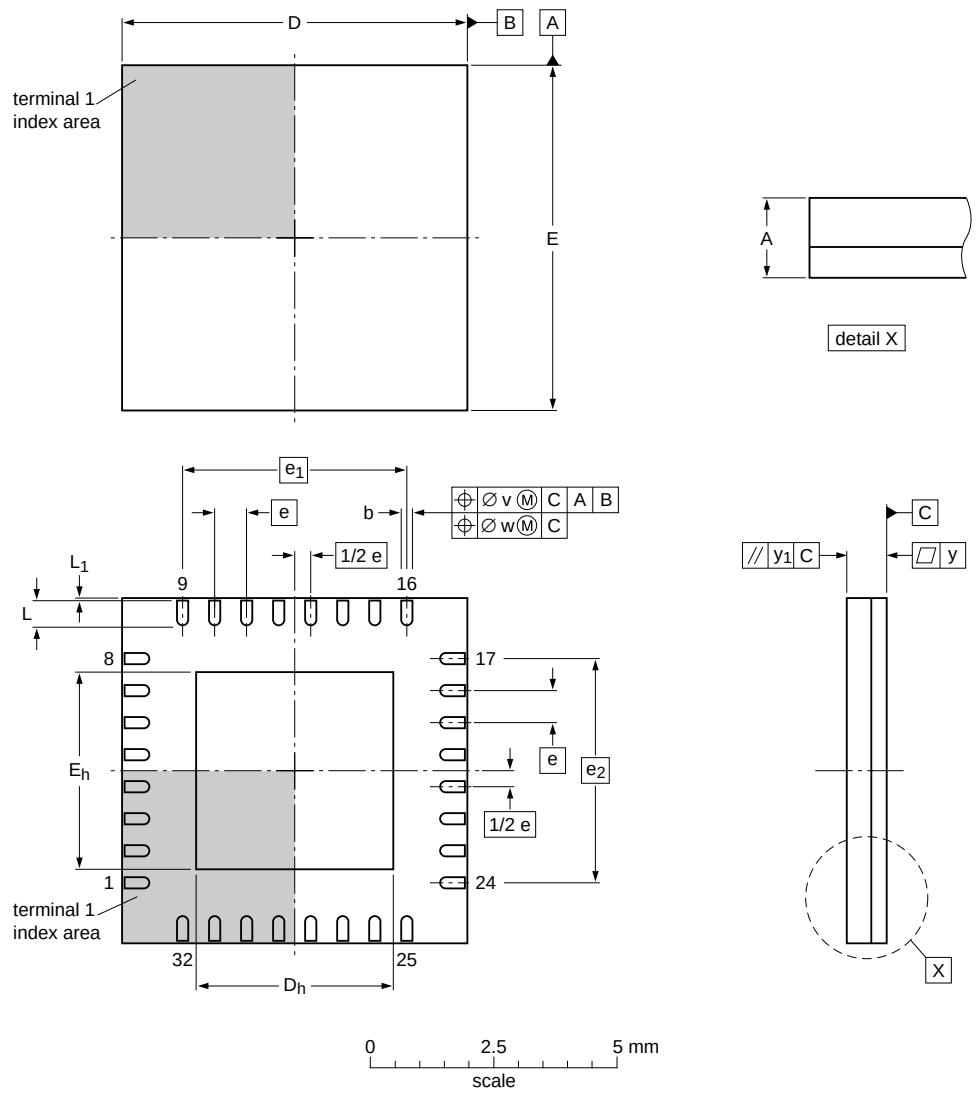

Dimensions

Unit		A	b	D	D_h	E	E_h	e	e_1	e_2	L	L_1	v	w	y	y_1
	max	0.90	0.28	7.1	4.05	7.1	4.05				0.55	0.10				
mm	nom	0.80	0.23	7.0	4.00	7.0	4.00	0.65	4.55	4.55	0.50	0.05	0.1	0.05	0.08	0.1
	min	0.75	0.18	6.9	3.95	6.9	3.95				0.45	0.00				

Note

1. Plastic or metal protrusions of 0.075 mm maximum per side are not included

sot1152-1_po

Outline version	References				European projection	Issue date
	IEC	JEDEC	JEITA			
SOT1152-1	- - -	- - -	- - -			~~09-10-13~~ 09-11-16

Fig 24. Package outline SOT1152-1 (HVQFN32)

© IDT 2012. All rights reserved.

13. Abbreviations

Table 47. Abbreviations

Acronym	Description
ADC	Analog-to-Digital Converter
DCS	Duty Cycle Stabilizer
ESD	ElectroStatic Discharge
IF	Intermediate Frequency
IMD	InterModulation Distortion
LSB	Least Significant Bit
LVCMOS	Low-Voltage Complementary Metal-Oxide Semiconductor
LVPECL	Low-Voltage Positive Emitter-Coupled Logic
MSB	Most Significant Bit
OTR	OuT-of-Range
PRBS	Pseudo-Random Binary Sequence
SFDR	Spurious-Free Dynamic Range
SNR	Signal-to-Noise Ratio
SPI	Serial Peripheral Interface
TX	Transmitter

© IDT 2012. All rights reserved.

14. Revision history

Table 48. Revision history

Document ID	Release date	Data sheet status	Change notice	Supersedes
ADC1113S125 v.2	20120702	Product data sheet	-	ADC1113S125 v.1
ADC1113S125 v.1	20110315	Product data sheet	-	-

15. Contact information

For more information or sales office addresses, please visit: http://www.idt.com

© IDT 2012. All rights reserved.

16. Contents

1 General description . . . 1
2 Features and benefits . . . 1
3 Applications . . . 1
4 Ordering information . . . 2
5 Block diagram . . . 3
6 Pinning information . . . 4
6.1 Pinning . . . 4
6.2 Pin description . . . 4
7 Limiting values . . . 5
8 Thermal characteristics . . . 5
9 Static characteristics . . . 6
10 Dynamic characteristics . . . 8
10.1 Dynamic characteristics . . . 8
10.2 Clock and digital output timing . . . 9
10.3 Serial output timing . . . 10
10.4 SPI timing . . . 11
11 Application information . . . 12
11.1 Analog inputs . . . 12
11.1.1 Input stage description . . . 12
11.1.2 Anti-kickback circuitry . . . 12
11.1.3 Transformer . . . 13
11.2 System reference and power management . . . 14
11.2.1 Internal/external reference . . . 14
11.2.2 Programmable full-scale . . . 16
11.2.3 Common-mode output voltage ($V_{O(cm)}$) . . . 16
11.2.4 Biasing . . . 17
11.3 Clock input . . . 17
11.3.1 Drive modes . . . 17
11.3.2 Equivalent input circuit . . . 18
11.3.3 Duty cycle stabilizer . . . 19
11.3.4 Clock input divider . . . 19
11.4 Digital outputs . . . 19
11.4.1 Serial output equivalent circuit . . . 19
11.5 JESD204A serializer . . . 20
11.5.1 Digital JESD204A formatter . . . 20
11.5.2 ADC core output codes versus input voltage . . . 21
11.6 Serial Peripheral Interface (SPI) . . . 22
11.6.1 Register description . . . 22
11.6.2 Channel control . . . 24
11.6.3 Register description . . . 26
11.6.3.1 ADC control registers . . . 26
11.6.4 JESD204A digital control registers . . . 28
12 Package outline . . . 33
13 Abbreviations . . . 34
14 Revision history . . . 35
15 Contact information . . . 35
16 Contents . . . 36

© IDT 2012. All rights reserved.