KAD5512P

Low Power 12-Bit, 250/210/170/125MSPS ADC

FN6807
Rev 5.00
May 31, 2016

The KAD5512P is the low-power member of the KAD5512 family of 12-bit analog-to-digital converters. Designed with Intersil's proprietary FemtoCharge™ technology on a standard CMOS process, the family supports sampling rates of up to 250MSPS. The KAD5512P is part of a pin-compatible portfolio of 10, 12 and 14-bit A/Ds with sample rates ranging from 125MSPS to 500MSPS.

A Serial Peripheral Interface (SPI) port allows for extensive configurability, as well as fine control of various parameters such as gain and offset.

Digital output data is presented in selectable LVDS or CMOS formats. The KAD5512P is available in 72 Ld and 48 Ld QFN packages with an exposed paddle. Operating from a 1.8V supply, performance is specified over the full industrial temperature range (-40°C to +85°C).

Key Specifications

- SNR = 66.1dBFS for f_{IN} = 105MHz (-1dBFS)
- SFDR = 87dBc for f_{IN} = 105MHz (-1dBFS)
- Total Power Consumption
  - 267/219mW at 250/125MSPS (SDR Mode)
  - 234/189mW at 250/125MSPS (DDR Mode)

Related Literature

- KAD5512P-50 Datasheet
- KAD5512HP, Datasheet

Features

- Half the power of the pin-compatible KAD5512HP family
- 1.5GHz analog input bandwidth
- 60fs clock jitter
- Programmable gain, offset and skew control
- Over-range indicator
- Selectable clock divider: ÷1, ÷2 or ÷4
- Clock phase selection
- Nap and sleep modes
- Two's complement, gray code or binary data format
- SDR/DDR LVDS-compatible or LVCMOS outputs
- Programmable built-in test patterns
- Single-supply 1.8V operation
- Pb-free (RoHS compliant)

Applications

- Power amplifier linearization
- Radar and satellite antenna array processing
- Broadband communications
- High-performance data acquisition
- Communications test equipment
- WiMAX and microwave receivers

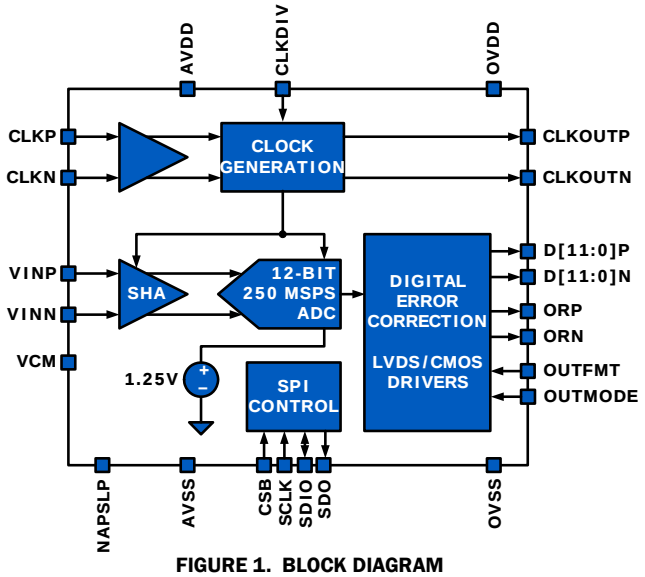

FIGURE 1. BLOCK DIAGRAM

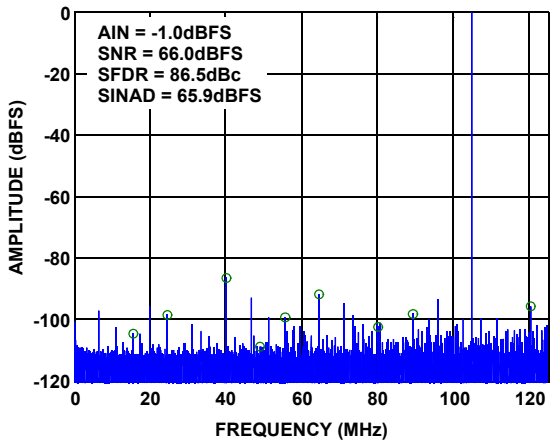

FIGURE 2. SINGLE-TONE SPECTRUM AT 105MHz (250MSPS)

Table of Contents

Ordering Information 3
Pin Configuration 4
Pin Descriptions - 72 Ld QFN 4
Pin Configuration 7
Pin Descriptions - 48 Ld QFN 7
Absolute Maximum Ratings 9
Thermal Information 9
Recommended Operating Conditions 9
Electrical Specifications 9
Digital Specifications 12
Timing Diagrams 13
Switching Specifications 14
Typical Performance Curves 15
Theory of Operation 18
Functional Description 18
Power-On Calibration 18
User-Initiated Reset 19
Analog Input 19
VCM Output 20
Clock Input 20
Jitter 20
Voltage Reference 21
Digital Outputs 21
Over Range Indicator 21
Power Dissipation 21
Nap/Sleep 21
Data Format 22
Serial Peripheral Interface 24
SPI Physical Interface 24
SPI Configuration 24
Device Information 25
Indexed Device Configuration/Control 25
Global Device Configuration/Control 26
Device Test 27
72 Ld/48 Ld Package Options 27
SPI Memory Map 28
Equivalent Circuits 29
ADC Evaluation Platform 31
Layout Considerations 31
PCB Layout Example 31
Split Ground and Power Planes 31
Clock Input Considerations 31
Exposed Paddle 31
Bypass and Filtering 31
LVDS Outputs 31
LVCMOS Outputs 31
Unused Inputs 31
General PowerPAD Design Considerations 31
Definitions 32
Revision History 33
About Intersil 34
Package Outline Drawing 35
L48.7x7E 35
L72.10x10D 36

TABLE 1. PIN-COMPATIBLE FAMILY

MODEL	RESOLUTION	SPEED (MSPS)	PACKAGE	
			Q48EP	Q72EP
KAD5514P-25/21/17/12	14	250/210/170/125	X	X
KAD5512P-50	12	500		X
KAD5512P-25/21/17/12	12	250/210/170/125	X	X
KAD5512HP-25/21/17/12	12	250/210/170/125	X	X
KAD5510P-50	10	500		X
KAD5510P-25/21/17/12	10	250/210/170/125	X	

Ordering Information

PART NUMBER (Note 3)	PART MARKING	SPEED (MSPS)	TEMP. RANGE (°C)	PACKAGE (RoHS Compliant)	PKG. DWG. #
KAD5512P-25Q72 (Note 1)	KAD5512P-25 Q72EP-I	250	-40 to +85	72 Ld QFN	L72.10x10D
KAD5512P-21Q72 (Note 1)	KAD5512P-21 Q72EP-I	210	-40 to +85	72 Ld QFN	L72.10x10D
KAD5512P-17Q72 (Note 1)	KAD5512P-17 Q72EP-I	170	-40 to +85	72 Ld QFN	L72.10x10D
KAD5512P-12Q72 (Note 1)	KAD5512P-12 Q72EP-I	125	-40 to +85	72 Ld QFN	L72.10x10D
KAD5512P-25Q48 (Note 2)	KAD5512P-25 Q48EP-I	250	-40 to +85	48 Ld QFN	L48.7x7E
KAD5512P-21Q48 (Note 2)	KAD5512P-21 Q48EP-I	210	-40 to +85	48 Ld QFN	L48.7x7E
KAD5512P-17Q48 (Note 2)	KAD5512P-17 Q48EP-I	170	-40 to +85	48 Ld QFN	L48.7x7E
KAD5512P-12Q48 (Note 2)	KAD5512P-12 Q48EP-I	125	-40 to +85	48 Ld QFN	L48.7x7E

NOTES:

1. These Intersil Pb-free plastic packaged products employ special Pb-free material sets; molding compounds/die attach materials and NiPdAu plate-e4 termination finish, which is RoHS compliant and compatible with both SnPb and Pb-free soldering operations. Intersil Pb-free products are MSL classified at Pb-free peak reflow temperatures that meet or exceed the Pb-free requirements of IPC/JEDEC J STD-020.
2. These Intersil Pb-free plastic packaged products employ special Pb-free material sets, molding compounds/die attach materials, and 100% matte tin plate plus anneal (e3 termination finish, which is RoHS compliant and compatible with both SnPb and Pb-free soldering operations). Intersil Pb-free products are MSL classified at Pb-free peak reflow temperatures that meet or exceed the Pb-free requirements of IPC/JEDEC J STD-020.
3. For Moisture Sensitivity Level (MSL), please see device information page for KAD5512P-25, KAD5512P-21, KAD5512P-17, KAD5512P-12. For more information on MSL please see techbrief TB363.

Pin Configuration

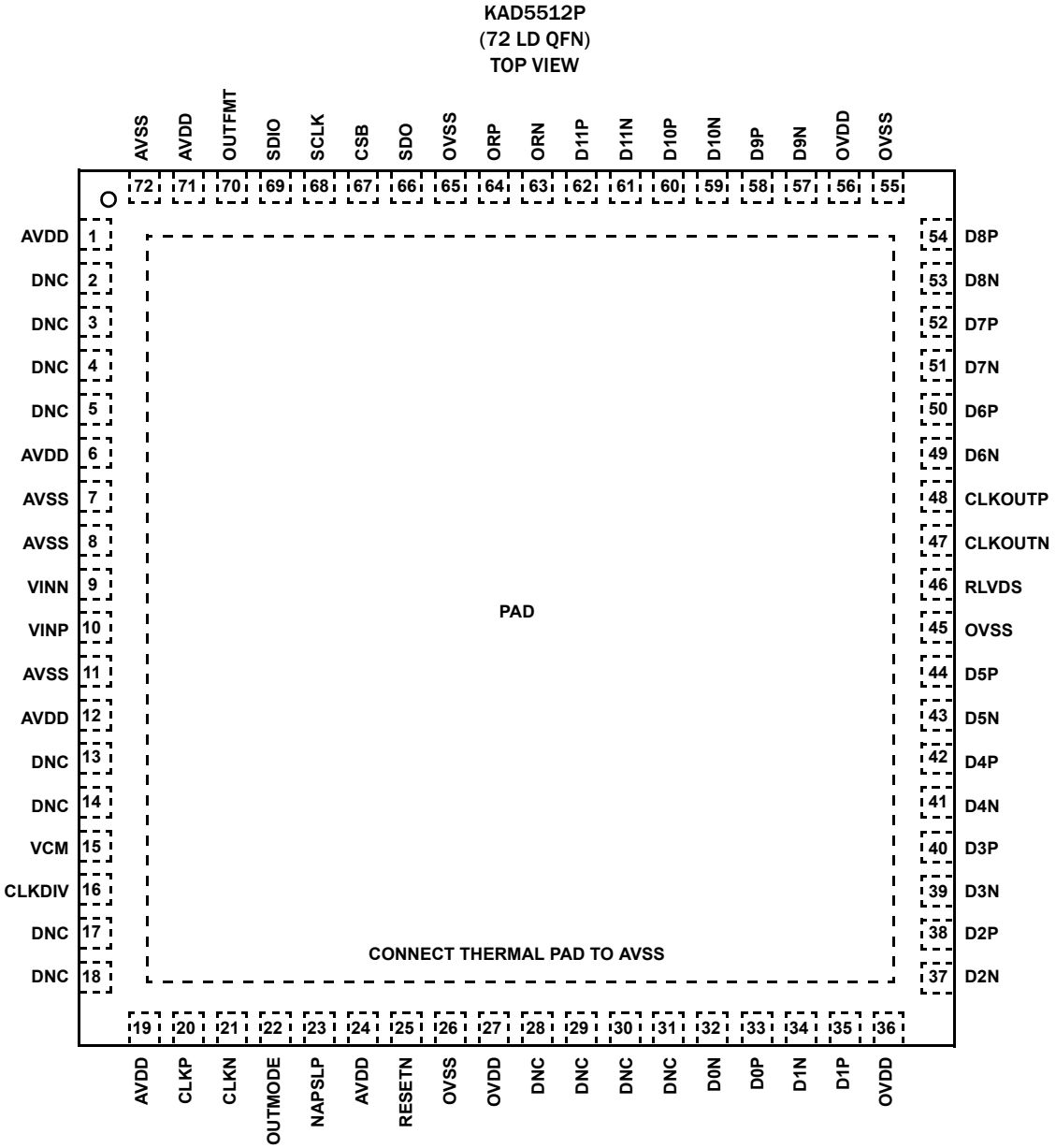

Pin Descriptions - 72 Ld QFN

PIN NUMBER	LVDS [LVCMOS] NAME	LVDS [LVCMOS] FUNCTION SDR MODE	DDR MODE COMMENTS
1, 6, 12, 19, 24, 71	AVDD	1.8V Analog Supply	
2, 3, 4, 5, 13, 14, 17, 18, 28, 29, 30, 31	DNC	Do Not Connect	
7, 8, 11, 72	AVSS	Analog Ground	
9, 10	VINN, VINP	Analog Input Negative, Positive	
15	VCM	Common-Mode Output	
16	CLKDIV	Tri-Level Clock Divider Control	

Pin Descriptions - 72 Ld QFN (Continued)

PIN NUMBER	LVDS [LVCMOS] NAME	LVDS [LVCMOS] FUNCTION SDR MODE	DDR MODE COMMENTS
20, 21	CLKP, CLKN	Clock Input True, Complement	
22	OUTMODE	Tri-Level Output Mode Control (LVDS, LVCMOS)	
23	NAPSLP	Tri-Level Power Control (Nap, Sleep modes)	
25	RESETN	Power-On Reset (Active Low, see page 19)	
26, 45, 55, 65	OVSS	Output Ground	
27, 36, 56	OVDD	1.8V Output Supply	
32	D0N [NC]	LVDS Bit 0 (LSB) Output Complement [NC in LVCMOS]	DDR Logical Bits 1, 0 (LVDS)
33	D0P [D0]	LVDS Bit 0 (LSB) Output True [LVCMOS Bit 0]	DDR Logical Bits 1, 0 (LVDS or CMOS)
34	D1N [NC]	LVDS Bit 1 Output Complement [NC in LVCMOS]	NC in DDR
35	D1P [D1]	LVDS Bit 1 Output True [LVCMOS Bit 1]	NC in DDR
37	D2N [NC]	LVDS Bit 2 Output Complement [NC in LVCMOS]	DDR Logical Bits 3, 2 (LVDS)
38	D2P [D2]	LVDS Bit 2 Output True [LVCMOS Bit 2]	DDR Logical Bits 3, 2 (LVDS or CMOS)
39	D3N [NC]	LVDS Bit 3 Output Complement [NC in LVCMOS]	NC in DDR
40	D3P [D3]	LVDS Bit 3 Output True [LVCMOS Bit 3]	NC in DDR
41	D4N [NC]	LVDS Bit 4 Output Complement [NC in LVCMOS]	DDR Logical Bits 5, 4 (LVDS)
42	D4P [D4]	LVDS Bit 4 Output True [LVCMOS Bit 4]	DDR Logical Bits 5, 4 (LVDS or CMOS)
43	D5N [NC]	LVDS Bit 5 Output Complement [NC in LVCMOS]	NC in DDR
44	D5P [D5]	LVDS Bit 5 Output True [LVCMOS Bit 5]	NC in DDR
46	RLVDS	LVDS Bias Resistor (Connect to OVSS with a 10kΩ, 1% resistor)	
47	CLKOUTN [NC]	LVDS Clock Output Complement [NC in LVCMOS]	
48	CLKOUTP [CLKOUT]	LVDS Clock Output True [LVCMOS CLKOUT]	
49	D6N [NC]	LVDS Bit 6 Output Complement [NC in LVCMOS]	DDR Logical Bits 7, 6 (LVDS)
50	D6P [D6]	LVDS Bit 6 Output True [LVCMOS Bit 6]	DDR Logical Bits 7, 6 (LVDS or CMOS)
51	D7N [NC]	LVDS Bit 7 Output Complement [NC in LVCMOS]	NC in DDR
52	D7P [D7]	LVDS Bit 7 Output True [LVCMOS Bit 7]	NC in DDR
53	D8N [NC]	LVDS Bit 8 Output Complement [NC in LVCMOS]	DDR Logical Bits 9, 8 (LVDS)

Pin Descriptions - 72 Ld QFN (Continued)

PIN NUMBER	LVDS [LVCMOS] NAME	LVDS [LVCMOS] FUNCTION SDR MODE	DDR MODE COMMENTS
54	D8P [D8]	LVDS Bit 8 Output True [LVCMOS Bit 8]	DDR Logical Bits 9, 8 (LVDS or CMOS)
57	D9N [NC]	LVDS Bit 9 Output Complement [NC in LVCMOS]	NC in DDR
58	D9P [D9]	LVDS Bit 9 Output True [LVCMOS Bit 9]	NC in DDR
59	D10N [NC]	LVDS Bit 10 Output Complement [NC in LVCMOS]	DDR Logical Bits 11, 10 (LVDS)
60	D10P [D10]	LVDS Bit 10 Output True [LVCMOS Bit 10]	DDR Logical Bits 11, 10 (LVDS or CMOS)
61	D11N [NC]	LVDS Bit 11 Output Complement [NC in LVCMOS]	NC in DDR
62	D11P [D11]	LVDS Bit 11 Output True [LVCMOS Bit 11]	NC in DDR
63	ORN [NC]	LVDS Over-Range Complement [NC in LVCMOS]	
64	ORP [OR]	LVDS Over-Range True [LVCMOS Over-Range]	
66	SDO	SPI Serial Data Output (4.7kΩ pull-up to OVDD is required)	
67	CSB	SPI Chip Select (active low)	
68	SCLK	SPI Clock	
69	SDIO	SPI Serial Data Input/Output	
70	OUTFMT	Tri-Level Output Data Format Control (Two's Complement, Gray Code, Offset Binary)	
PAD (Exposed Paddle)	AVSS	Analog Ground (Connect to a low thermal impedance analog ground plane with multiple vias)	

NOTE: LVCMOS output mode functionality is shown in brackets (NC = No Connection). SDR is the default state at power-up for the 72 Ld package.

Pin Configuration

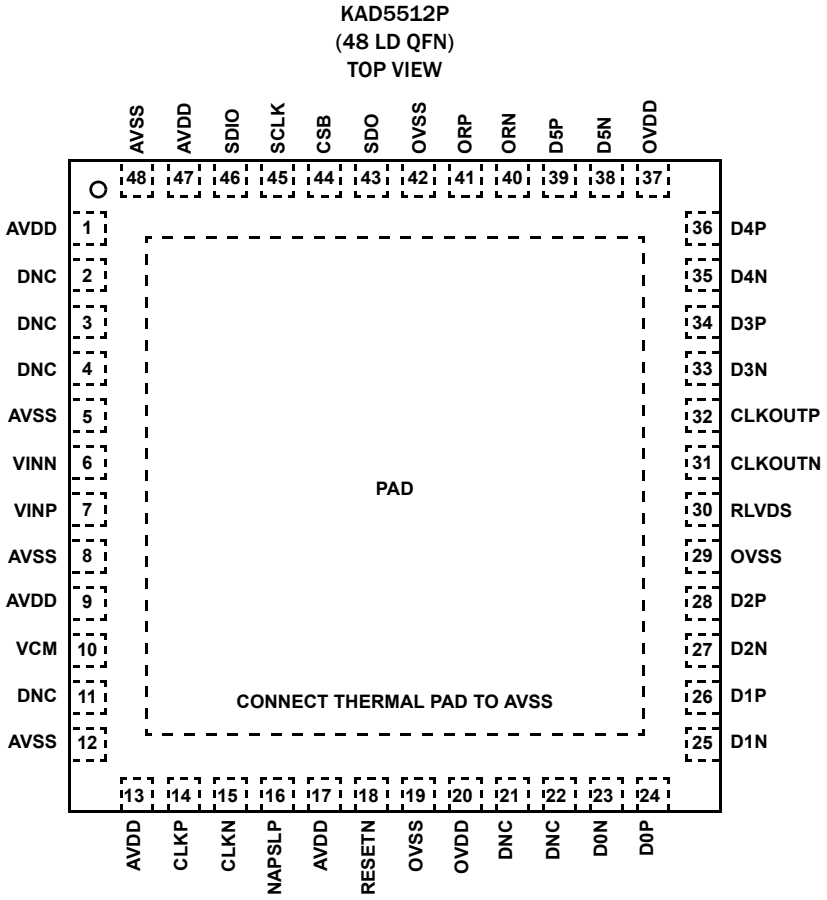

FIGURE 3. PIN CONFIGURATION

Pin Descriptions - 48 Ld QFN

PIN NUMBER	LVDS [LVCMOS] NAME	LVDS [LVCMOS] FUNCTION
1, 9, 13, 17, 47	AVDD	1.8V Analog Supply
2, 3, 4, 11, 21, 22	DNC	Do Not Connect
5, 8, 12, 48	AVSS	Analog Ground
6, 7	VINN, VINP	Analog Input Negative, Positive
10	VCM	Common-Mode Output
14, 15	CLKP, CLKN	Clock Input True, Complement
16	NAPSLP	Tri-Level Power Control (Nap, Sleep modes)
18	RESETN	Power On Reset (Active Low, see page 19)
19, 29, 42	OVSS	Output Ground
20, 37	OVDD	1.8V Output Supply
23	D0N [NC]	LVDS DDR Logical Bits 1, 0 Output Complement [NC in LVCMOS]

Pin Descriptions - 48 Ld QFN (Continued)

PIN NUMBER	LVDS [LVCMOS] NAME	LVDS [LVCMOS] FUNCTION
24	D0P [D0]	LVDS DDR Logical Bits 1, 0 Output True [CMOS DDR Logical Bits 1, 0 in LVCMOS]
25	D1N [NC]	LVDS DDR Logical Bits 3, 2 Output Complement [NC in LVCMOS]
26	D1P [D1]	LVDS DDR Logical Bits 3, 2 Output True [CMOS DDR Logical Bits 3, 2 in LVCMOS]
27	D2N [NC]	LVDS DDR Logical Bits 5, 4 Output Complement [NC in LVCMOS]
28	D2P [D2]	LVDS DDR Logical Bits 5, 4 Output True [CMOS DDR Logical Bits 5, 4 in LVCMOS]
30	RLVDS	LVDS Bias Resistor (Connect to OVSS with a 10kΩ, 1% resistor)
31	CLKOUTN [NC]	LVDS Clock Output Complement [NC in LVCMOS]
32	CLKOUTP [CLKOUT]	LVDS Clock Output True [LVCMOS CLKOUT]
33	D3N [NC]	LVDS DDR Logical Bits 7, 6 Output Complement [NC in LVCMOS]
34	D3P [D3]	LVDS DDR Logical Bits 7, 6 Output True [CMOS DDR Logical Bits 7, 6 in LVCMOS]
35	D4N [NC]	LVDS DDR Logical Bits 9, 8 Output Complement [NC in LVCMOS]
36	D4P [D4]	LVDS DDR Logical Bits 9, 8 Output True [CMOS DDR Logical Bits 9, 8 in LVCMOS]
38	D5N [NC]	LVDS DDR Logical Bits 11, 10 Output Complement [NC in LVCMOS]
39	D5P [D5]	LVDS DDR Logical Bits 11, 10 Output True [CMOS DDR Logical Bits 11, 10 in LVCMOS]
40	ORN [NC]	LVDS Over-Range Complement [NC in LVCMOS]
41	ORP [OR]	LVDS Over-Range True [LVCMOS Over-Range]
43	SDO	SPI Serial Data Output (4.7kΩ pull-up to OVDD is required)
44	CSB	SPI Chip Select (active low)
45	SCLK	SPI Clock
46	SDIO	SPI Serial Data Input/Output
PAD (Exposed Paddle)	AVSS	Analog Ground (Connect to a low thermal impedance analog ground plane with multiple vias)

NOTE: LVCMOS output mode functionality is shown in brackets (NC = No Connection).

Absolute Maximum Ratings

AVDD to AVSS . . . . . -0.4V to 2.1V
OVDD to OVSS . . . . . -0.4V to 2.1V
AVSS to OVSS . . . . . -0.3V to 0.3V
Analog Inputs to AVSS . . . . . -0.4V to AVDD + 0.3V
Clock Inputs to AVSS . . . . . -0.4V to AVDD + 0.3V
Logic Input to AVSS . . . . . -0.4V to OVDD + 0.3V
Logic Inputs to OVSS . . . . . -0.4V to OVDD + 0.3V

Thermal Information

Thermal Resistance (Typical)	θ_{JA} (°C/W)	θ_{JC} (°C/W)
48 Ld QFN (Notes 4, 5)	25	0.5
72 Ld QFN (Note 4, 5)	24	0.5

Storage Temperature . . . . . -65°C to +150°C
Junction Temperature . . . . . +150°C
Pb-Free Reflow Profile . . . . . see TB493

Recommended Operating Conditions

AVDD 1.8V
OVDD 1.8V
Temperature . . . . . -40°C to +85°C

CAUTION: Do not operate at or near the maximum ratings listed for extended periods of time. Exposure to such conditions may adversely impact product reliability and result in failures not covered by warranty.

NOTES:

4. θ_{JA} is measured in free air with the component mounted on a high effective thermal conductivity test board with "direct attach" features. See Tech Brief TB379.
5. For θ_{JC}, the "case temp" location is the center of the exposed metal pad on the package underside.

Electrical Specifications

All specifications apply under the following conditions unless otherwise noted: AVDD = 1.8V, OVDD = 1.8V, T_A = -40°C to +85°C (typical specifications at +25°C), A_{IN} = -1dBFS, f_{SAMPLE} = Maximum Conversion Rate (per speed grade). **Boldface limits apply across the operating temperature range, -40°C to +85°C.**

PARAMETER	SYMBOL	TEST CONDITIONS	KAD5512P-25 (Note 6)			KAD5512P-21 (Note 6)			KAD5512P-17 (Note 6)			KAD5512P-12 (Note 6)			UNIT
			MIN	TYP	MAX	MIN	TYP	MAX	MIN	TYP	MAX	MIN	TYP	MAX	
DC SPECIFICATIONS															
Analog Input															
Full-Scale Analog Input Range	V_{FS}	Differential	**1.40**	1.47	**1.54**	**1.40**	1.47	**1.54**	**1.40**	1.47	**1.54**	**1.40**	1.47	**1.54**	V_{P-P}
Input Resistance	R_{IN}	Differential		1000			1000			1000			1000		Ω
Input Capacitance	C_{IN}	Differential		1.8			1.8			1.8			1.8		pF
Full-Scale Range Temperature Drift	A_{VTC}	Full Temperature		90			90			90			90		ppm/°C
Input Offset Voltage	V_{OS}		**-10**	±2	**10**	**-10**	±2	**10**	**-10**	±2	**10**	**-10**	±2	**10**	mV
Gain Error	E_G			±0.6			±0.6			±0.6			±0.6		%
Common-Mode Output Voltage	V_{CM}		**435**	535	**635**	**435**	535	**635**	**435**	535	**635**	**435**	535	**635**	mV
Common-Mode Input Current (per pin)	I_{CM}			2.5			2.5			2.5			2.5		µA/MSPS
Clock Inputs															
Inputs Common-Mode Voltage				0.9			0.9			0.9			0.9		V
CLKP, CLKN Input Swing				1.8			1.8			1.8			1.8		V
Power Requirements															
1.8V Analog Supply Voltage	AVDD		**1.7**	1.8	**1.9**	**1.7**	1.8	**1.9**	**1.7**	1.8	**1.9**	**1.7**	1.8	**1.9**	V
1.8V Digital Supply Voltage	OVDD		**1.7**	1.8	**1.9**	**1.7**	1.8	**1.9**	**1.7**	1.8	**1.9**	**1.7**	1.8	**1.9**	V

Electrical Specifications

All specifications apply under the following conditions unless otherwise noted: AVDD = 1.8V, OVDD = 1.8V, T_A = -40°C to +85°C (typical specifications at +25°C), A_{IN} = -1dBFS, f_{SAMPLE} = Maximum Conversion Rate (per speed grade). **Boldface limits apply across the operating temperature range, -40°C to +85°C. (Continued)**

PARAMETER	SYMBOL	TEST CONDITIONS	KAD5512P-25 (Note 6)			KAD5512P-21 (Note 6)			KAD5512P-17 (Note 6)			KAD5512P-12 (Note 6)			UNIT
			MIN	TYP	MAX	MIN	TYP	MAX	MIN	TYP	MAX	MIN	TYP	MAX	
1.8V Analog Supply Current	I_{AVDD}			90	**101**		83	**94**		77	**87**		69	**79**	mA
1.8V Digital Supply Current (SDR) (Note 7)	I_{OVDD}	3mA LVDS		58	**62**		56	**60**		54	**58**		52	**56**	mA
1.8V Digital Supply Current (DDR) (Note 7)	I_{OVDD}	3mA LVDS		39			38			36			35		mA
Power Supply Rejection Ratio	PSRR	30MHz, 200mV$_{P-P}$ signal on AVDD		-36			-36			-36			-36		dB
Total Power Dissipation															
Normal Mode (SDR)	P_D	3mA LVDS		267	**286**		252	**271**		237	**253**		219	**235**	mW
Normal Mode (DDR)	P_D	3mA LVDS		234			219			204			189		mW
Nap Mode	P_D			84	**98.6**		80	**94.6**		78	**91.6**		74	**87.6**	mW
Sleep Mode	P_D	CSB at logic high		2	**6**		2	**6**		2	**6**		2	**6**	mW
Nap Mode Wake-Up Time (Note 8)		Sample Clock Running		1			1			1			1		µs
Sleep Mode Wake-Up Time (Note 8)		Sample Clock Running		1			1			1			1		ms
AC SPECIFICATIONS															
Differential Nonlinearity	DNL		**-0.8**	±0.3	**0.8**	**-0.8**	±0.3	**0.8**	**-0.8**	±0.3	**0.8**	**-0.8**	±0.3	**0.8**	LSB
Integral Nonlinearity	INL		**-2.0**	±0.8	**2.0**	**-2.0**	±1.1	**2.0**	**-2.0**	±1.1	**2.0**	**-2.5**	±1.4	**2.5**	LSB
Minimum Conversion Rate (Note 9)	f_S MIN				**40**			**40**			**40**			**40**	MSPS
Maximum Conversion Rate	f_S MAX		**250**			**210**			**170**			**125**			MSPS
Signal-to-Noise Ratio	SNR	f_{IN} = 10MHz		66.1			66.6			66.9			67.1		dBFS
		f_{IN} = 105MHz	**64.0**	66.1		**64.5**	66.6		**65.0**	66.9		**65.2**	67.1		dBFS
		f_{IN} = 190MHz		65.9			66.3			66.7			66.8		dBFS
		f_{IN} = 364MHz		65.4			65.7			66.1			66.1		dBFS
		f_{IN} = 695MHz		63.8			64.2			64.4			64.1		dBFS
		f_{IN} = 995MHz		62.6			62.4			62.7			62.4		dBFS
Signal-to-Noise and Distortion	SINAD	f_{IN} = 10MHz		65.3			65.6			65.8			66.3		dBFS
		f_{IN} = 105MHz	**63.3**	65.3		**63.8**	65.6		**64.3**	65.8		**64.3**	66.3		dBFS
		f_{IN} = 190MHz		64.6			65.2			65.5			65.6		dBFS
		f_{IN} = 364MHz		63.9			64.3			64.7			64.1		dBFS
		f_{IN} = 695MHz		56.9			57.2			57.9			57.4		dBFS
		f_{IN} = 995MHz		49.6			44.9			48.3			49.3		dBFS

Electrical Specifications

All specifications apply under the following conditions unless otherwise noted: AVDD = 1.8V, OVDD = 1.8V, T_A = -40°C to +85°C (typical specifications at +25°C), A_{IN} = -1dBFS, f_{SAMPLE} = Maximum Conversion Rate (per speed grade). **Boldface limits apply across the operating temperature range, -40°C to +85°C. (Continued)**

PARAMETER	SYMBOL	TEST CONDITIONS	KAD5512P-25 (Note 6)			KAD5512P-21 (Note 6)			KAD5512P-17 (Note 6)			KAD5512P-12 (Note 6)			UNIT
			MIN	TYP	MAX	MIN	TYP	MAX	MIN	TYP	MAX	MIN	TYP	MAX	
Effective Number of Bits	ENOB	f_{IN} = 10MHz		10.6			10.6			10.6			10.7		Bits
		f_{IN} = 105MHz	**10.3**	10.6		**10.4**	10.6		**10.5**	10.6		**10.5**	10.7		Bits
		f_{IN} = 190MHz		10.4			10.5			10.6			10.6		Bits
		f_{IN} = 364MHz		10.3			10.4			10.5			10.4		Bits
		f_{IN} = 695MHz		9.2			9.2			9.3			9.2		Bits
		f_{IN} = 995MHz		7.9			7.2			7.7			7.9		Bits
Spurious-Free Dynamic Range	SFDR	f_{IN} = 10MHz		83.0			81.4			78.8			79.6		dBc
		f_{IN} = 105MHz	**70**	87		**70**	86.2		**70**	84.4		**70**	86		dBc
		f_{IN} = 190MHz		79.4			80.5			81.8			82.0		dBc
		f_{IN} = 364MHz		76.1			76.1			78.2			71.8		dBc
		f_{IN} = 695MHz		60.6			61.4			61.6			61.6		dBc
		f_{IN} = 995MHz		50.7			46.4			49.2			50.3		dBc
Intermodulation Distortion	IMD	f_{IN} = 70MHz		-85.7			-92.1			-94.5			-95.1		dBFS
		f_{IN} = 170MHz		-97.1			-87.1			-91.6			-85.7		dBFS
Word Error Rate	WER			10^{-12}			10^{-12}			10^{-12}			10^{-12}		
Full Power Bandwidth	FPBW			1.5			1.5			1.5			1.5		GHz

NOTES:

6. Parameters with MIN and/or MAX limits are 100% production tested at their worst case temperature extreme (+85°C).
7. Digital Supply Current is dependent upon the capacitive loading of the digital outputs. I_{OVDD} specifications apply for 10pF load on each digital output.
8. See "Nap/Sleep" on page 21 for more details.
9. The DLL Range setting must be changed for low speed operation. See "Serial Peripheral Interface" on page 24 for more detail.

Digital Specifications

PARAMETER	SYMBOL	TEST CONDITIONS	MIN	TYP	MAX	UNIT
INPUTS						
Input Current High (SDIO, RESETN, CSB, SCLK)	I_{IH}	V_{IN} = 1.8V	0	1	10	µA
Input Current Low (SDIO, RESETN, CSB, SCLK)	I_{IL}	V_{IN} = 0V	-25	-12	-5	µA
Input Voltage High (SDIO, RESETN, CSB, SCLK)	V_{IH}		1.17			V
Input Voltage Low (SDIO, RESETN, CSB, SCLK)	V_{IL}				.63	V
Input Current High (OUTMODE, NAPSLP, CLKDIV, OUTFMT) (Note 10)	I_{IH}		15	25	40	µA
Input Current Low (OUTMODE, NAPSLP, CLKDIV, OUTFMT)	I_{IL}		-40	25	-15	µA
Input Capacitance	C_{DI}			3		pF
LVDS OUTPUTS						
Differential Output Voltage	V_T	3mA Mode		620		mV_{P-P}
Output Offset Voltage	V_{OS}	3mA Mode	950	965	980	mV
Output Rise Time	t_R			500		ps
Output Fall Time	t_F			500		ps
CMOS OUTPUTS						
Voltage Output High	V_{OH}	I_{OH} = -500µA	OVDD - 0.3	OVDD - 0.1		V
Voltage Output Low	V_{OL}	I_{OL} = 1mA		0.1	0.3	V
Output Rise Time	t_R			1.8		ns
Output Fall Time	t_F			1.4		ns

Timing Diagrams

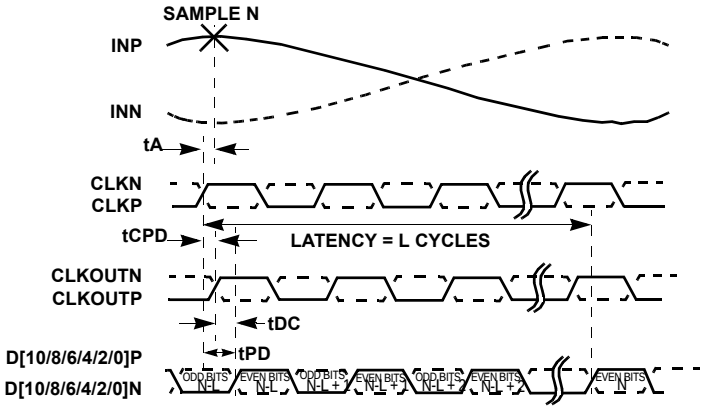

FIGURE 4A. DDR

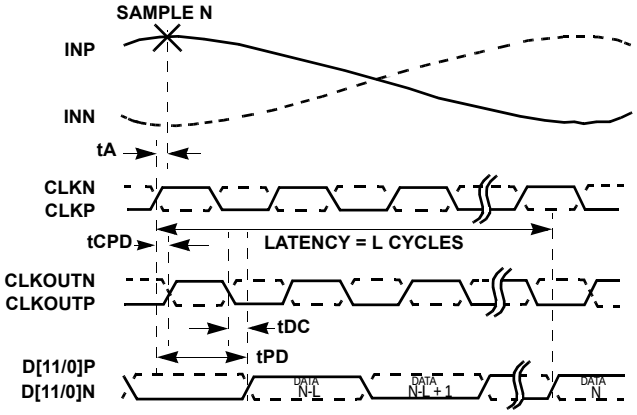

FIGURE 4B. SDR

FIGURE 4. LVDS TIMING DIAGRAMS (See "Digital Outputs" on page 21)

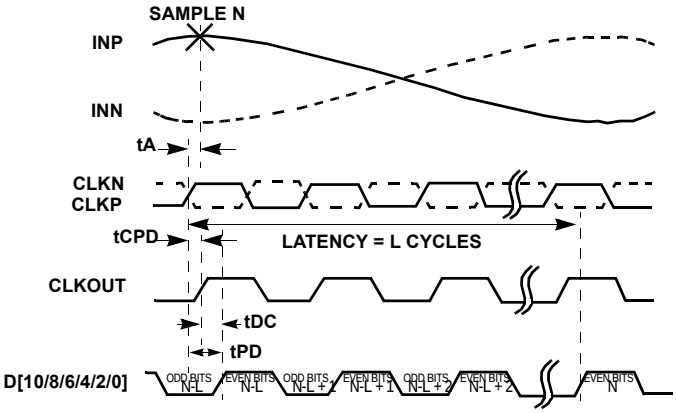

FIGURE 5A. DDR

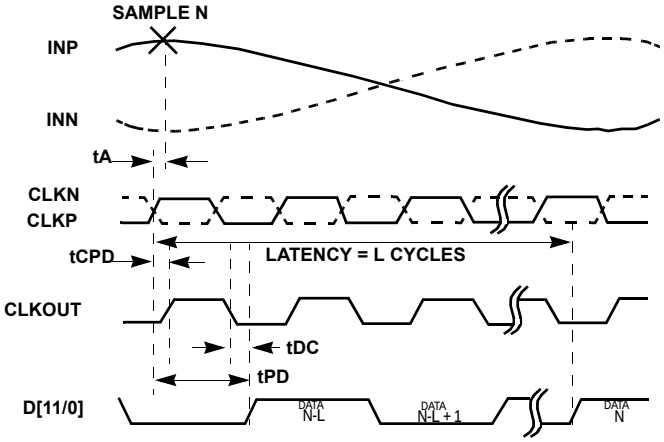

FIGURE 5B. SDR

FIGURE 5. CMOS TIMING DIAGRAM (See "Digital Outputs" on page 21)

Switching Specifications

PARAMETER	TEST CONDITIONS	SYMBOL	MIN	TYP	MAX	UNIT
ADC OUTPUT						
Aperture Delay		t_A		375		ps
RMS Aperture Jitter		j_A		60		fs
Output Clock to Data Propagation Delay, LVDS Mode (Note 11)	DDR Rising Edge	t_{DC}	-260	-50	120	ps
	DDR Falling Edge	t_{DC}	-160	10	230	ps
	SDR Falling Edge	t_{DC}	-260	-40	230	ps
Output Clock to Data Propagation Delay, CMOS Mode (Note 11)	DDR Rising Edge	t_{DC}	-220	-10	200	ps
	DDR Falling Edge	t_{DC}	-310	-90	110	ps
	SDR Falling Edge	t_{DC}	-310	-50	200	ps
Latency (Pipeline Delay)		L		7.5		cycles
Overvoltage Recovery		t_{OVR}		1		cycles
SPI INTERFACE (Notes 12, 13)						
SCLK Period	Write Operation	t_{CLK}	16			cycles (Note 12)
	Read Operation	t_{CLK}	66			cycles
SCLK Duty Cycle (t_{HI}/t_{CLK} or t_{LO}/t_{CLK})	Read or Write		25	50	75	%
CSB↓ to SCLK↑ Set-Up Time	Read or Write	t_S	1			cycles
CSB↑ after SCLK↑ Hold Time	Read or Write	t_H	3			cycles
Data Valid to SCLK↑ Set-Up Time	Write	t_{DSW}	1			cycles
Data Valid after SCLK↑ Hold Time	Write	t_{DHW}	3			cycles
Data Valid after SCLK↓ Time	Read	t_{DVR}			16.5	cycles
Data Invalid after SCLK↑ Time	Read	t_{DHR}	3			cycles
Sleep Mode CSB↓ to SCLK↑ Set-Up Time (Note 14)	Read or Write in Sleep Mode	t_S	150			µs

NOTES:

10. The Tri-Level Inputs internal switching thresholds are approximately 0.43V and 1.34V. It is advised to float the inputs, tie to ground or AVDD depending on desired function.
11. The input clock to output clock delay is a function of sample rate, using the output clock to latch the data simplifies data capture for most applications. Contact factory for more info if needed.
12. SPI Interface timing is directly proportional to the ADC sample period (4ns at 250MSPS).
13. The SPI may operate asynchronously with respect to the ADC sample clock.
14. The CSB set-up time increases in sleep mode due to the reduced power state, CSB set-up time in Nap mode is equal to normal mode CSB set-up time (4ns min).

Typical Performance Curves

All Typical Performance Characteristics apply under the following conditions unless otherwise noted: AVDD = OVDD = 1.8V, T_A = +25°C, A_{IN} = -1dBFS, f_{IN} = 105MHz, f_{SAMPLE} = Maximum Conversion Rate (per speed grade).

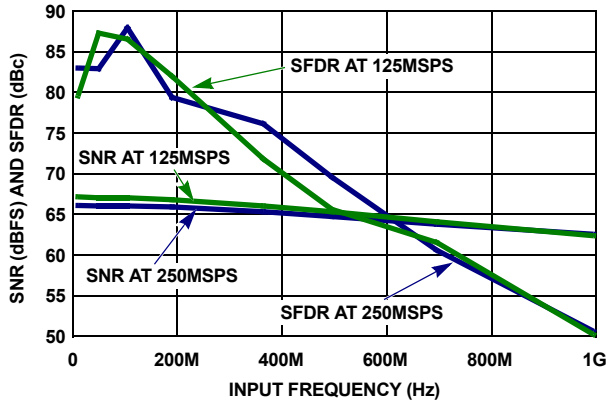

FIGURE 6. SNR AND SFDR vs f_{IN}

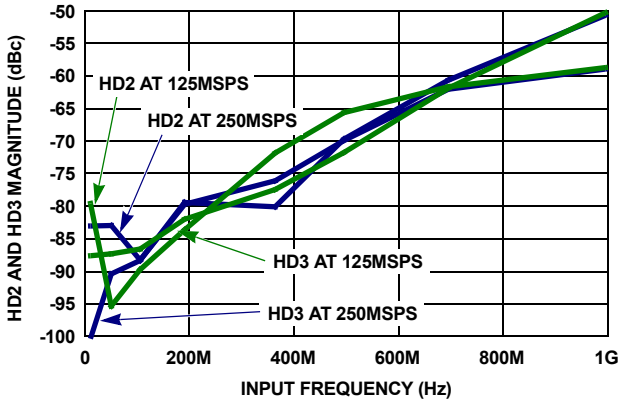

FIGURE 7. HD2 AND HD3 vs f_{IN}

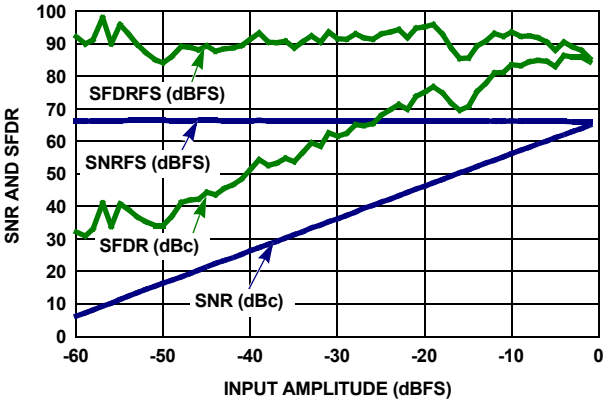

FIGURE 8. SNR AND SFDR vs A_{IN}

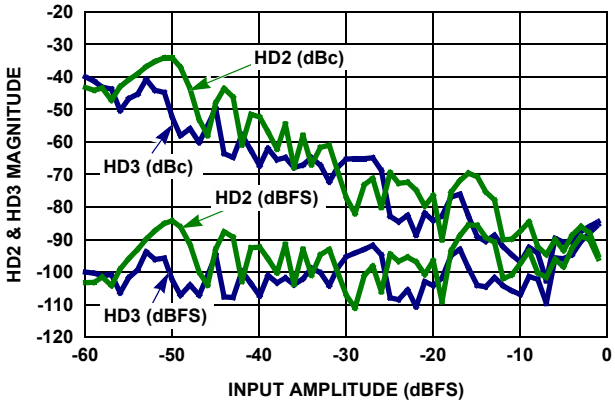

FIGURE 9. HD2 AND HD3 vs A_{IN}

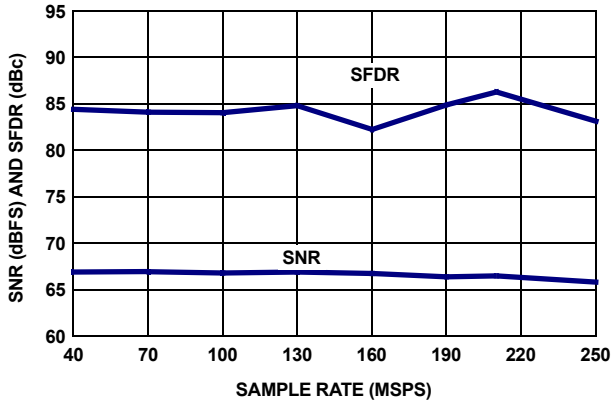

FIGURE 10. SNR AND SFDR vs f_{SAMPLE}

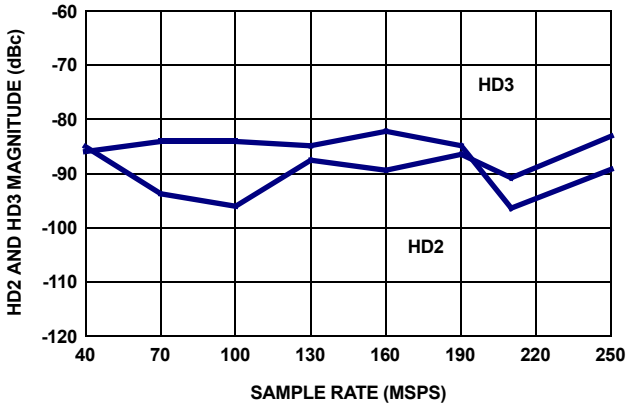

FIGURE 11. HD2 AND HD3 vs f_{SAMPLE}

Typical Performance Curves

All Typical Performance Characteristics apply under the following conditions unless otherwise noted: AVDD = OVDD = 1.8V, T_A = +25°C, A_{IN} = -1dBFS, f_{IN} = 105MHz, f_{SAMPLE} = Maximum Conversion Rate (per speed grade). **(Continued)**

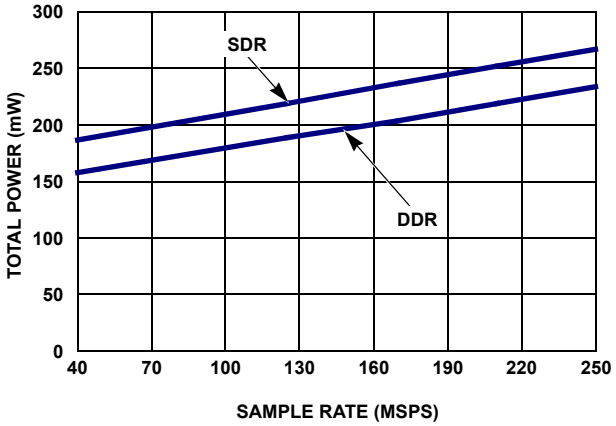

FIGURE 12. POWER vs f_{SAMPLE} IN 3mA LVDS MODE

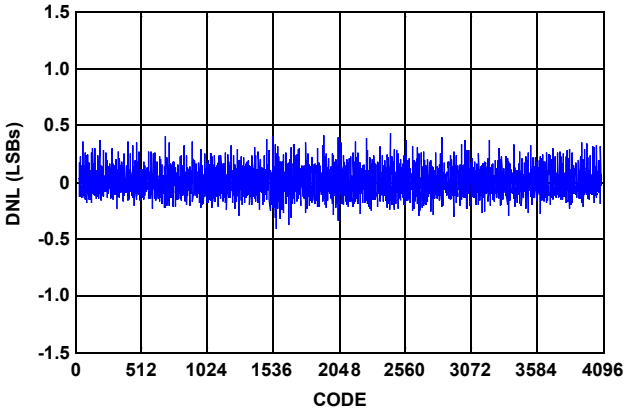

FIGURE 13. DIFFERENTIAL NONLINEARITY

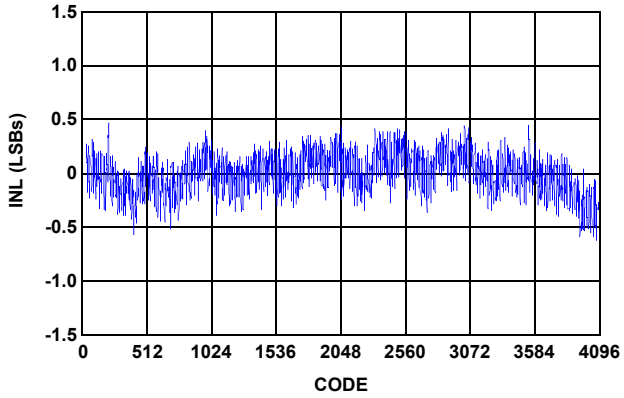

FIGURE 14. INTEGRAL NONLINEARITY

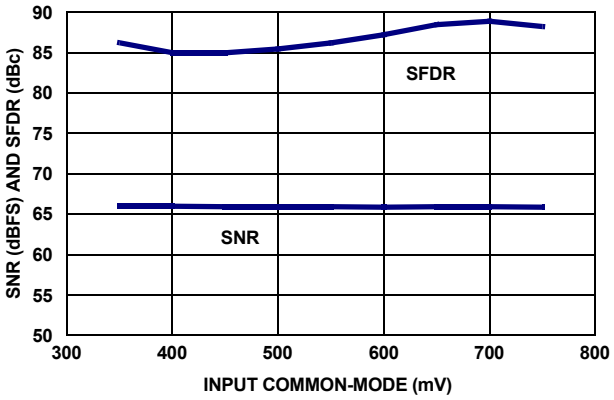

FIGURE 15. SNR AND SFDR vs VCM

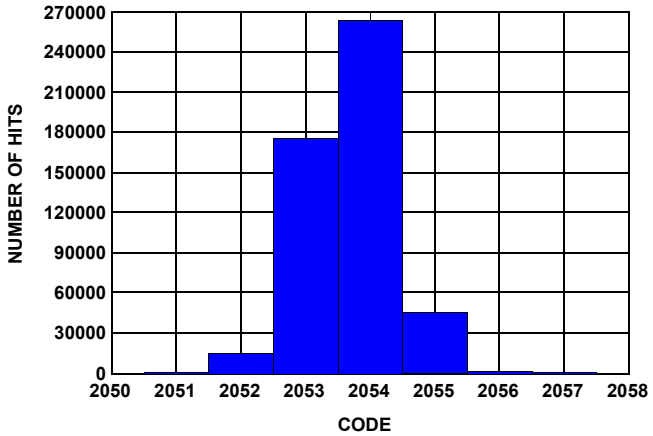

FIGURE 16. NOISE HISTOGRAM

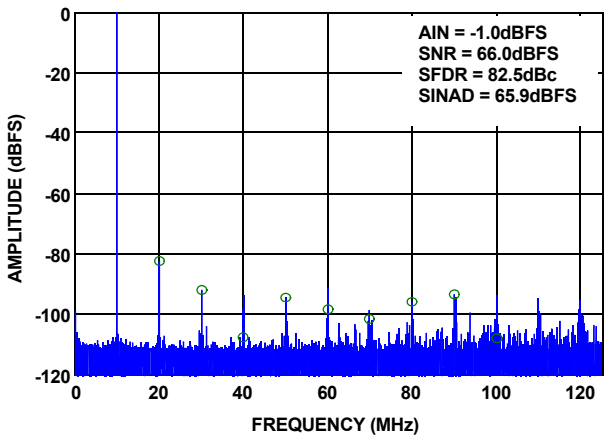

FIGURE 17. SINGLE-TONE SPECTRUM AT 10MHz

Typical Performance Curves

All Typical Performance Characteristics apply under the following conditions unless otherwise noted: AVDD = OVDD = 1.8V, T_A = +25°C, A_{IN} = -1dBFS, f_{IN} = 105MHz, f_{SAMPLE} = Maximum Conversion Rate (per speed grade). **(Continued)**

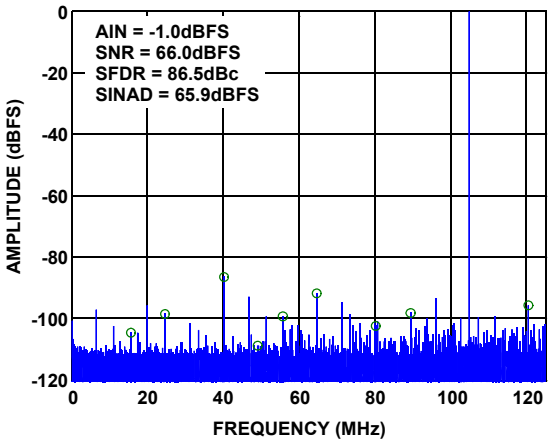

FIGURE 18. SINGLE-TONE SPECTRUM AT 105MHz

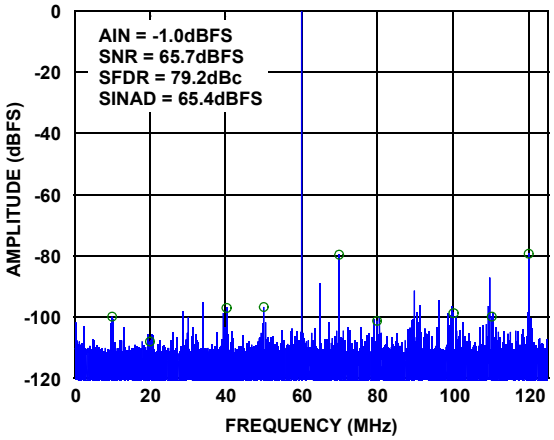

FIGURE 19. SINGLE-TONE SPECTRUM AT 190MHz

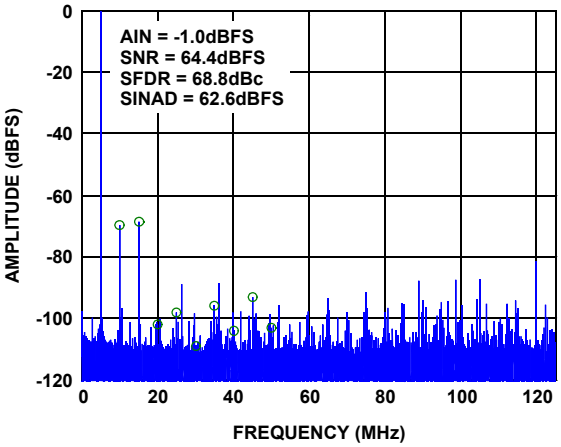

FIGURE 20. SINGLE-TONE SPECTRUM AT 495MHz

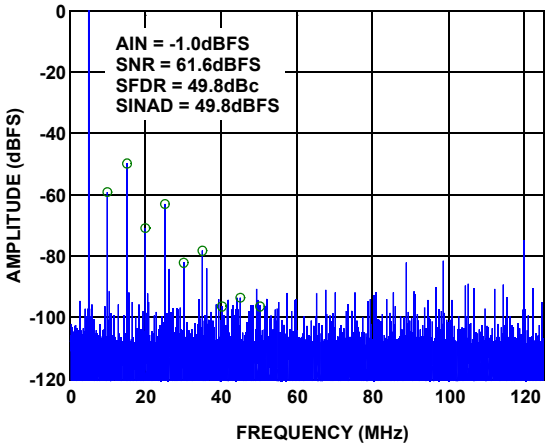

FIGURE 21. SINGLE-TONE SPECTRUM AT 995MHz

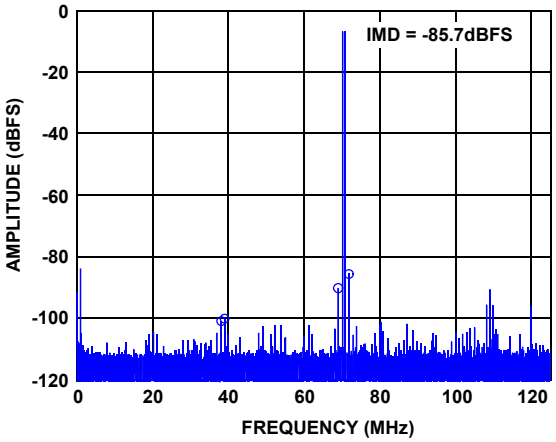

FIGURE 22. TWO-TONE SPECTRUM AT 70MHz

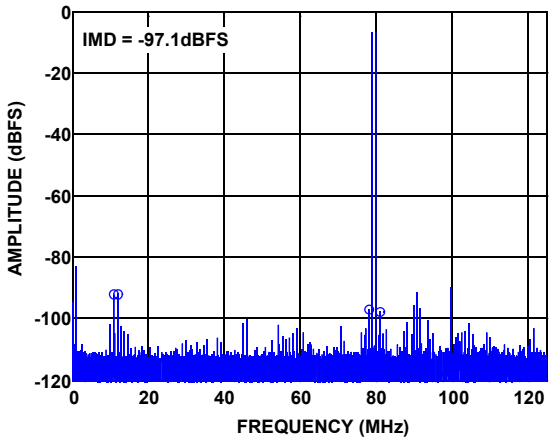

FIGURE 23. TWO-TONE SPECTRUM AT 170MHz

Theory of Operation

Functional Description

The KAD5512P is based upon a 12-bit, 250MSPS A/D converter core that utilizes a pipelined successive approximation architecture (Figure 24). The input voltage is captured by a Sample-Hold Amplifier (SHA) and converted to a unit of charge. Proprietary charge-domain techniques are used to successively compare the input to a series of reference charges. Decisions made during the successive approximation operations determine the digital code for each input value. The converter pipeline requires six samples to produce a result. Digital error correction is also applied, resulting in a total latency of seven and one half clock cycles. This is evident to the user as a time lag between the start of a conversion and the data being available on the digital outputs.

Power-On Calibration

The ADC performs a self-calibration at start-up. An internal Power-On Reset (POR) circuit detects the supply voltage ramps and initiates the calibration when the analog and digital supply voltages are above a threshold. The following conditions must be adhered to for the power-on calibration to execute successfully:

- A frequency-stable conversion clock must be applied to the CLKP/CLKN pins
- DNC pins (especially 3, 4 and 18) must not be pulled up or down
- SDO (pin 66) must be high
- RESETN (pin 25) must begin low
- SPI communications must not be attempted

A user-initiated reset can subsequently be invoked in the event that the previously mentioned conditions cannot be met at power-up.

The SDO pin requires an external 4.7kΩ pull-up to OVDD. If the SDO pin is pulled low externally during power-up, calibration will not be executed properly.

After the power supply has stabilized, the internal POR releases RESETN and an internal pull-up pulls it high starting the calibration sequence. When the RESETN pin is driven by external logic, it should be connected to an open-drain output with open-state leakage of less than 0.5mA to assure exit from the reset state. A driver that can be switched from logic low to high impedance can also be used to drive RESETN provided the high impedance state leakage is less than 0.5mA and the logic voltages are the same.

The calibration sequence is initiated on the rising edge of RESETN, as shown in Figure 25 on page 19. The Over-Range (OR) output is set high once RESETN is pulled low, and remains in that state until calibration is complete. The OR output returns to normal operation at that time, so it is important that the analog input be within the converter's full-scale range to observe the transition. If the input is in an over-range condition, the OR pin will stay high, and it will not be possible to detect the end of the calibration cycle.

While RESETN is low, the output clock (CLKOUTP/CLKOUTN) is set low. Normal operation of the output clock resumes at the next input clock edge (CLKP/CLKN) after RESETN is deasserted. At 250MSPS the nominal calibration time is 200ms, while the maximum calibration time is 550ms.

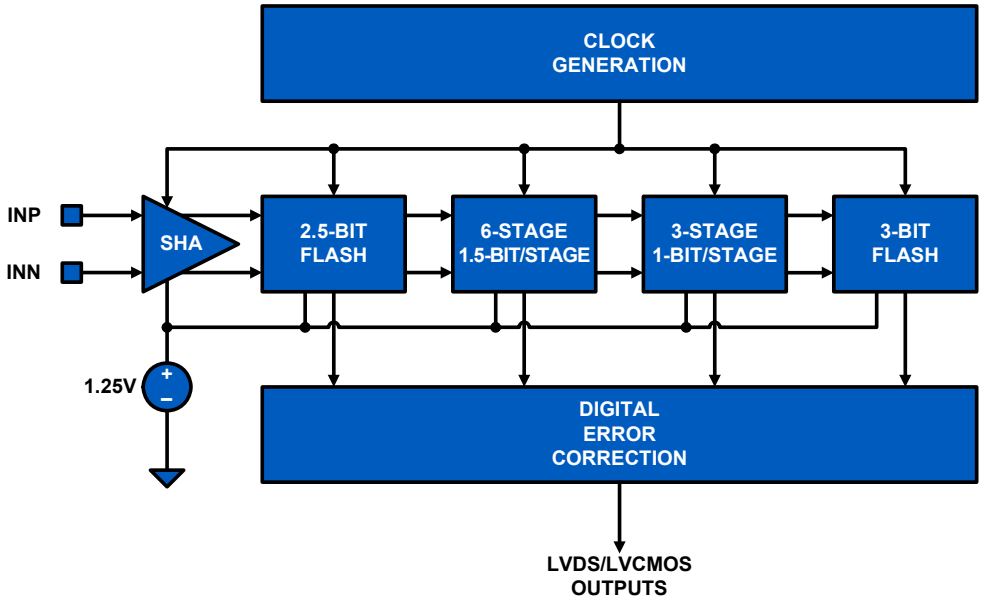

FIGURE 24. ADC CORE BLOCK DIAGRAM

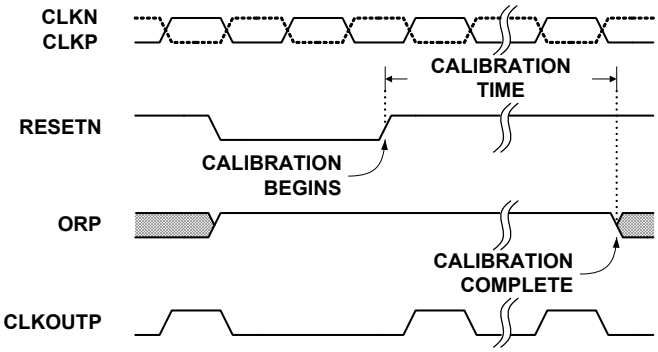

FIGURE 25. CALIBRATION TIMING

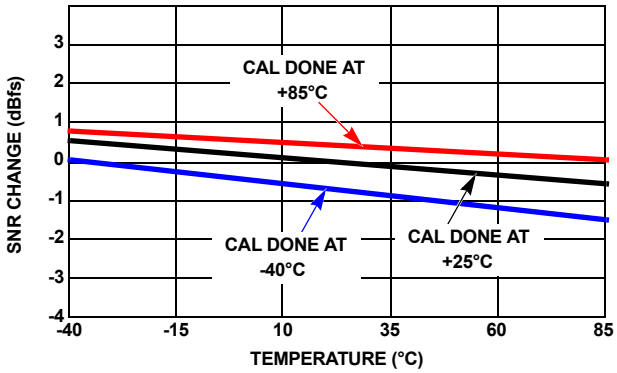

FIGURE 26. SNR PERFORMANCE vs TEMPERATURE

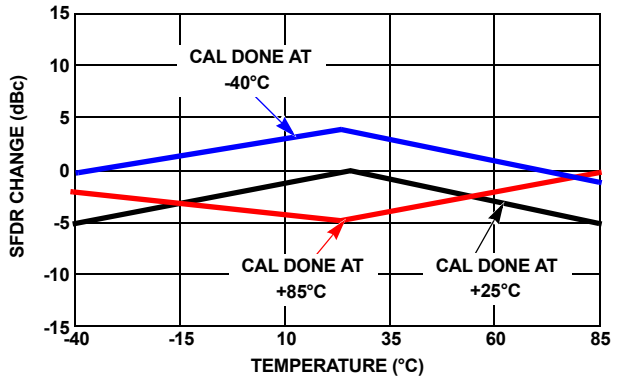

FIGURE 27. SFDR PERFORMANCE vs TEMPERATURE

User-Initiated Reset

Recalibration of the ADC can be initiated at any time by driving the RESETN pin low for a minimum of one clock cycle. An open-drain driver with less than 0.5mA open-state leakage is recommended so the internal high impedance pull-up to OVDD can assure exit from the reset state. As is the case during power-on reset, the SDO, RESETN and DNC pins must be in the proper state for the calibration to successfully execute.

The performance of the KAD5512P changes with variations in temperature, supply voltage or sample rate. The extent of these changes may necessitate recalibration, depending on system performance requirements. Best performance will be achieved by recalibrating the ADC under the environmental conditions at which it will operate.

A supply voltage variation of less than 100mV will generally result in an SNR change of less than 0.5dBFS and SFDR change of less than 3dBc.

In situations where the sample rate is not constant, best results will be obtained if the device is calibrated at the highest sample rate. Reducing the sample rate by less than 75MSPS will typically result in an SNR change of less than 0.5dBFS and an SFDR change of less than 3dBc.

Figures 26 and 27 show the effect of temperature on SNR and SFDR performance with calibration performed at -40°C, +25°C, and +85°C. Each plot shows the variation of SNR/SFDR across temperature after a single calibration at -40°C, +25°C and +85°C. Best performance is typically achieved by a user-initiated calibration at the operating conditions, as stated earlier. However, it can be seen that performance drift with temperature is not a very strong function of the temperature at which the calibration is performed. Full-rated performance will be achieved after power-up calibration regardless of the operating conditions.

Analog Input

The ADC core contains a fully differential input (VINP/VINN) to the Sample and Hold Amplifier (SHA). The ideal full-scale input voltage is 1.45V, centered at the VCM voltage of 0.535V as shown in Figure 28.

Best performance is obtained when the analog inputs are driven differentially. The common-mode output voltage, VCM, should be used to properly bias the inputs as shown in Figures 29 through 31. An RF transformer will give the best noise and distortion performance for wideband and/or high Intermediate Frequency (IF) inputs. Two different transformer input schemes are shown in Figures 29 and 30.

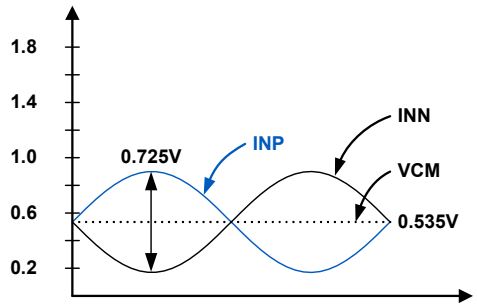

FIGURE 28. ANALOG INPUT RANGE

This dual transformer scheme is used to improve common-mode rejection, which keeps the common-mode level of the input matched to VCM. The value of the shunt resistor should be determined based on the desired load impedance. The differential input resistance of the KAD5512P is 1000Ω.

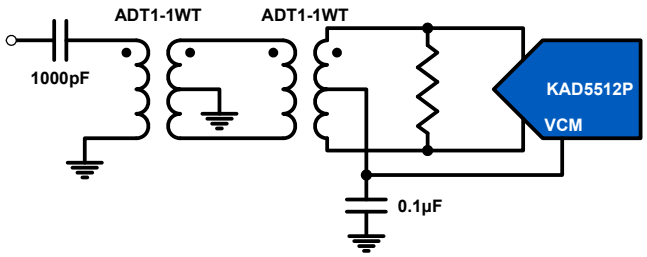

FIGURE 29. TRANSFORMER INPUT FOR GENERAL PURPOSE APPLICATIONS

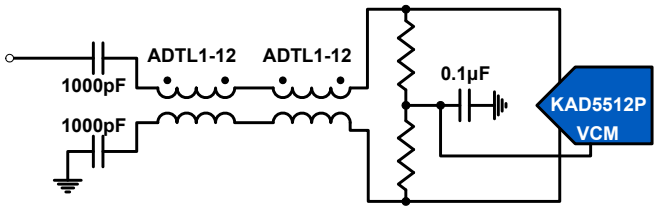

FIGURE 30. TRANSMISSION-LINE TRANSFORMER INPUT FOR HIGH IF APPLICATIONS

The SHA design uses a switched capacitor input stage (see Figure 44 on page 29), which creates current spikes when the sampling capacitance is reconnected to the input voltage. This causes a disturbance at the input, which must settle before the next sampling point. Lower source impedance will result in faster settling and improved performance. Therefore a 1:1 transformer and low shunt resistance are recommended for optimal performance.

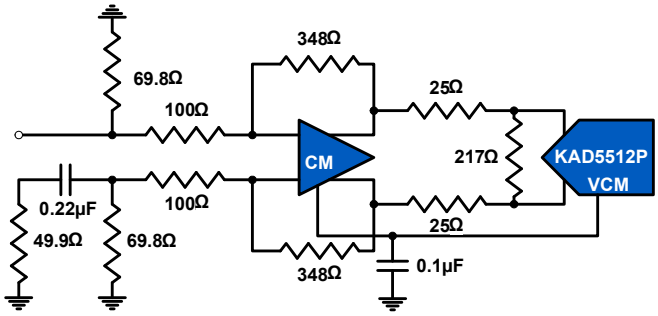

FIGURE 31. DIFFERENTIAL AMPLIFIER INPUT

A differential amplifier, as shown in Figure 31, can be used in applications that require DC-coupling. In this configuration, the amplifier will typically dominate the achievable SNR and distortion performance.

The current spikes from the SHA will try to force the analog input pins toward ground. In cases where the input pins are biased with more than 50Ω in series from VCM care must be taken to make sure the input common-mode range is not violated. The provided ICM value (250µA/MHz * 250MHz = 625µA at 250MSPS) may be used to calculate the expected voltage drop across any series resistance.

VCM Output

The VCM output is buffered with a series output impedance of 20Ω. It can easily drive a typical ADC driver's 10kΩ common-mode control pin. If an external buffer is not used the voltage drop across the internal 20Ω impedance must be considered when calculating the expected DC bias voltage at the analog input pins.

Clock Input

The clock input circuit is a differential pair (see Figure 45 on page 29). Driving these inputs with a high level (up to $1.8V_{P-P}$ on each input) sine or square wave will provide the lowest jitter performance. A transformer with 4:1 impedance ratio will provide increased drive levels.

The recommended drive circuit is shown in Figure 32. A duty range of 40% to 60% is acceptable. The clock can be driven single-ended, but this will reduce the edge rate and may impact SNR performance. The clock inputs are internally self-biased to AVDD/2 to facilitate AC coupling.

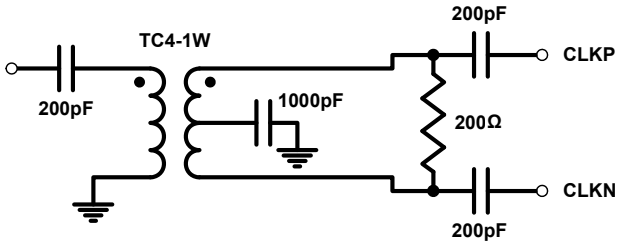

FIGURE 32. RECOMMENDED CLOCK DRIVE

A selectable 2x frequency divider is provided in series with the clock input. The divider can be used in the 2x mode with a sample clock equal to twice the desired sample rate. This allows the use of the Phase Slip feature, which enables synchronization of multiple ADCs.

TABLE 2. CLKDIV PIN SETTINGS

CLKDIV PIN	DIVIDE RATIO
AVSS	2
Float	1
AVDD	4

The clock divider can also be controlled through the SPI port, which overrides the CLKDIV pin setting. Details on this are contained in "Serial Peripheral Interface" on page 24.

A Delay-Locked Loop (DLL) generates internal clock signals for various stages within the charge pipeline. If the frequency of the input clock changes, the DLL may take up to 52µs to regain lock at 250MSPS. The lock time is inversely proportional to the sample rate.

Jitter

In a sampled data system, clock jitter directly impacts the achievable SNR performance. The theoretical relationship between clock jitter (t_J) and SNR is shown in Equation 1 and is illustrated in Figure 33.

$$SNR = 20 \log_{10}\left(\frac{1}{2\pi f_{IN} t_J}\right) \quad \text{(EQ. 1)}$$

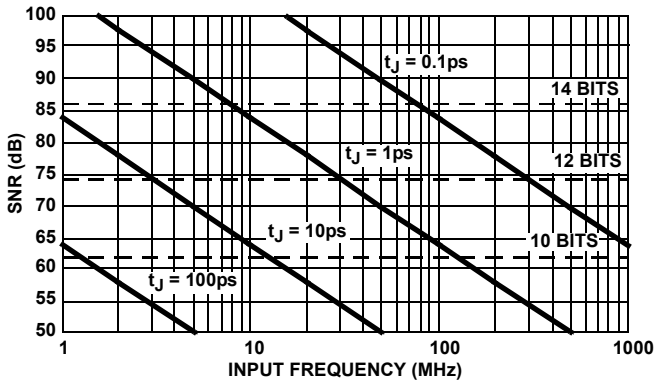

FIGURE 33. SNR vs CLOCK JITTER

This relationship shows the SNR that would be achieved if clock jitter were the only non-ideal factor. In reality, achievable SNR is limited by internal factors such as linearity, aperture jitter and thermal noise. Internal aperture jitter is the uncertainty in the sampling instant shown in Figure 4 on page 13. The internal aperture jitter combines with the input clock jitter in a root-sum-square fashion, since they are not statistically correlated, and this determines the total jitter in the system. The total jitter, combined with other noise sources, then determines the achievable SNR.

Voltage Reference

A temperature compensated voltage reference provides the reference charges used in the successive approximation operations. The full-scale range of each A/D is proportional to the reference voltage. The voltage reference is internally bypassed and is not accessible to the user.

Digital Outputs

Output data is available as a parallel bus in LVDS-compatible or CMOS modes. Additionally, the data can be presented in either Double Data Rate (DDR) or Single Data Rate (SDR) formats. The even numbered data output pins are active in DDR mode in the 72 Ld package option. When CLKOUT is low the MSB and all odd logical bits are output, while on the high phase the LSB and all even logical bits are presented (this is true in both the 72 Ld and 48 Ld package options). Figures 4 and 5 show the timing relationships for LVDS/CMOS and DDR/SDR modes.

The 48 Ld QFN package option contains six LVDS data output pin pairs, and therefore can only support DDR mode.

Additionally, the drive current for LVDS mode can be set to a nominal 3mA or a power-saving 2mA. The lower current setting can be used in designs where the receiver is in close physical proximity to the ADC. The applicability of this setting is dependent upon the PCB layout, therefore the user should experiment to determine if performance degradation is observed.

The output mode and LVDS drive current are selected via the OUTMODE pin as shown in Table 3.

TABLE 3. OUTMODE PIN SETTINGS

OUTMODE PIN	MODE
AVSS	LVCMOS
Float	LVDS, 3mA
AVDD	LVDS, 2mA

The output mode can also be controlled through the SPI port, which overrides the OUTMODE pin setting. Details on this are contained in "Serial Peripheral Interface" on page 24.

An external resistor creates the bias for the LVDS drivers. A 10kΩ, 1% resistor must be connected from the RLVDS pin to OVSS.

Over Range Indicator

The Over-Range (OR) bit is asserted when the output code reaches positive full-scale (e.g. 0xFFF in offset binary mode). The output code does not wrap around during an over-range condition. The OR bit is updated at the sample rate.

Power Dissipation

The power dissipated by the KAD5512P is primarily dependent on the sample rate and the output modes: LVDS vs CMOS and DDR vs SDR. There is a static bias in the analog supply, while the remaining power dissipation is linearly related to the sample rate. The output supply dissipation is approximately constant in LVDS mode, but linearly related to the clock frequency in CMOS mode. Figures 37 and 38 illustrate these relationships.

Nap/Sleep

Portions of the device may be shut down to save power during times when operation of the ADC is not required. Two power saving modes are available: Nap and Sleep. Nap mode reduces power dissipation to less than 98.6mW and recovers to normal operation in approximately 1µs. Sleep mode reduces power dissipation to less than 6mW but requires approximately 1ms to recover from a sleep command.

Wake-up time from sleep mode is dependent on the state of CSB; in a typical application CSB would be held high during sleep, requiring a user to wait 150µs maximum after CSB is asserted (brought low) prior to writing '001x' to SPI Register 25. The device would be fully powered up, in normal mode 1ms after this command is written.

Wake-up from Sleep Mode Sequence (CSB high)

- Pull CSB Low
- Wait 150µs
- Write '001x' to Register 25
- Wait 1ms until ADC fully powered on

In an application where CSB was kept low in sleep mode, the 150µs CSB set-up time is not required as the SPI registers are powered on when CSB is low, the chip power dissipation increases by ~ 15mW in this case. The 1ms wake-up time after the write of a '001x' to register 25 still applies. It is generally recommended to keep CSB high in sleep mode to avoid any unintentional SPI activity on the ADC.

All digital outputs (Data, CLKOUT and OR) are placed in a high impedance state during Nap or Sleep. The input clock should remain running and at a fixed frequency during Nap or Sleep, and CSB should be high. Recovery time from Nap mode will increase if the clock is stopped, since the internal DLL can take up to 52µs to regain lock at 250MSPS.

By default after the device is powered on, the operational state is controlled by the NAPSLP pin as shown in Table 4.

TABLE 4. NAPSLP PIN SETTINGS

NAPSLP PIN	MODE
AVSS	Normal
Float	Sleep
AVDD	Nap

The power-down mode can also be controlled through the SPI port, which overrides the NAPSLP pin setting. Details on this are contained in "Serial Peripheral Interface" on page 24. This is an indexed function when controlled from the SPI, but a global function when driven from the pin.

Data Format

Output data can be presented in three formats: two's complement, Gray code and offset binary. The data format is selected via the OUTFMT pin as shown in Table 5.

TABLE 5. OUTFMT PIN SETTINGS

OUTFMT PIN	MODE
AVSS	Offset Binary
Float	Two's Complement
AVDD	Gray Code

The data format can also be controlled through the SPI port, which overrides the OUTFMT pin setting. Details on this are contained in "Serial Peripheral Interface" on page 24.

Offset binary coding maps the most negative input voltage to code 0x000 (all zeros) and the most positive input to 0xFFF (all ones). Two's complement coding simply complements the MSB of the offset binary representation.

When calculating Gray code the MSB is unchanged. The remaining bits are computed as the XOR of the current bit position and the next most significant bit. Figure 34 shows this operation.

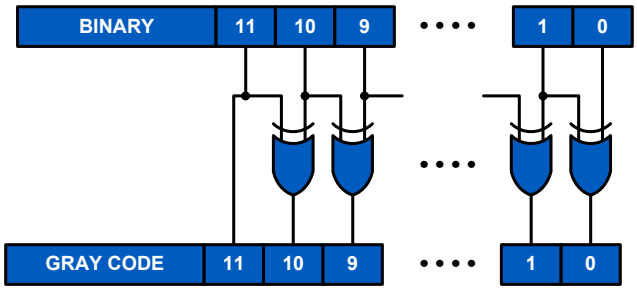

FIGURE 34. BINARY TO GRAY CODE CONVERSION

Converting back to offset binary from Gray code must be done recursively, using the result of each bit for the next lower bit as shown in Figure 35.

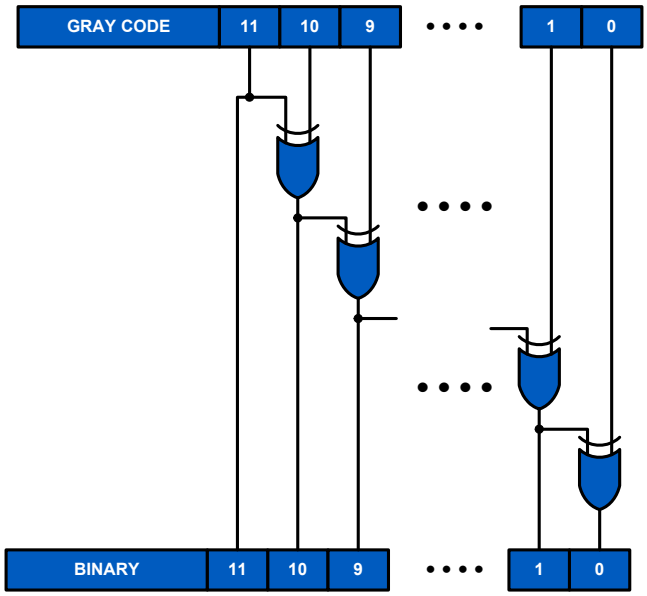

FIGURE 35. GRAY CODE TO BINARY CONVERSION

Mapping of the input voltage to the various data formats is shown in Table 6.

TABLE 6. INPUT VOLTAGE TO OUTPUT CODE MAPPING

INPUT VOLTAGE	OFFSET BINARY	TWO'S COMPLEMENT	GRAY CODE
–Full-Scale	000 00 000 00 00	100 00 000 00 00	000 00 000 00 00
–Full-Scale + 1LSB	000 00 000 00 01	100 00 000 00 01	000 00 000 00 01
Mid-Scale	100 00 000 00 00	000 00 000 00 00	110 00 000 00 00
+Full-Scale – 1LSB	111 11 111 11 10	011 11 111 11 10	100 00 000 00 01
+Full-Scale	111 11 111 11 11	011 11 111 111 1	100 00 000 00 00

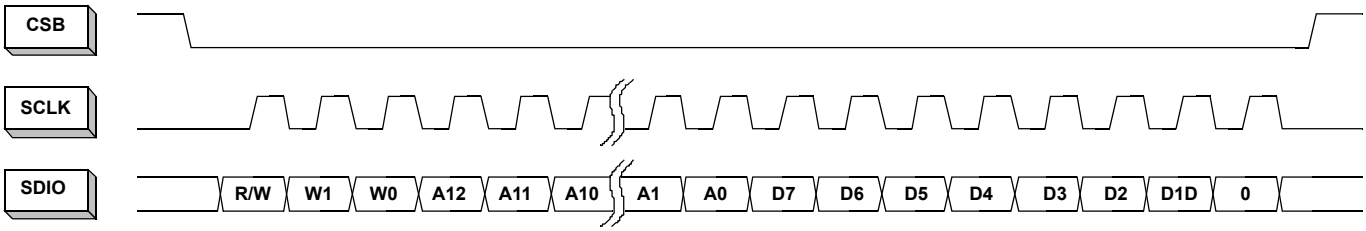

FIGURE 36. MSB-FIRST ADDRESSING

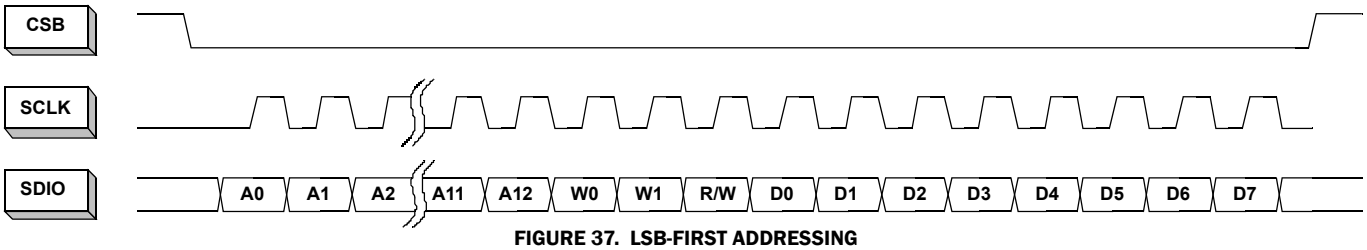

FIGURE 37. LSB-FIRST ADDRESSING

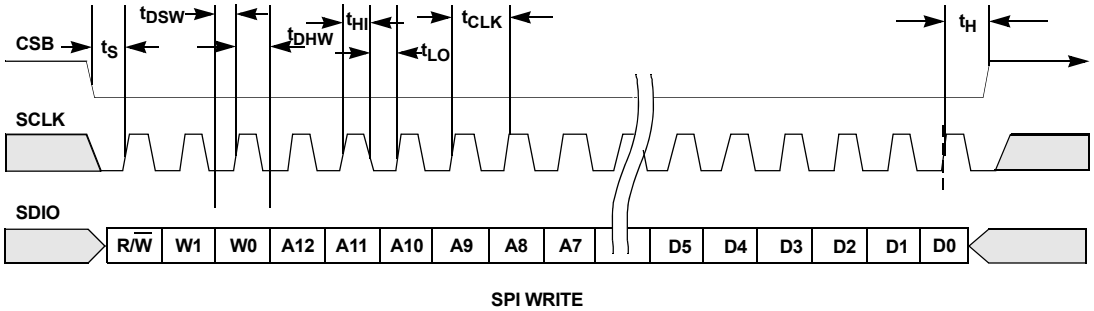

FIGURE 38. SPI WRITE

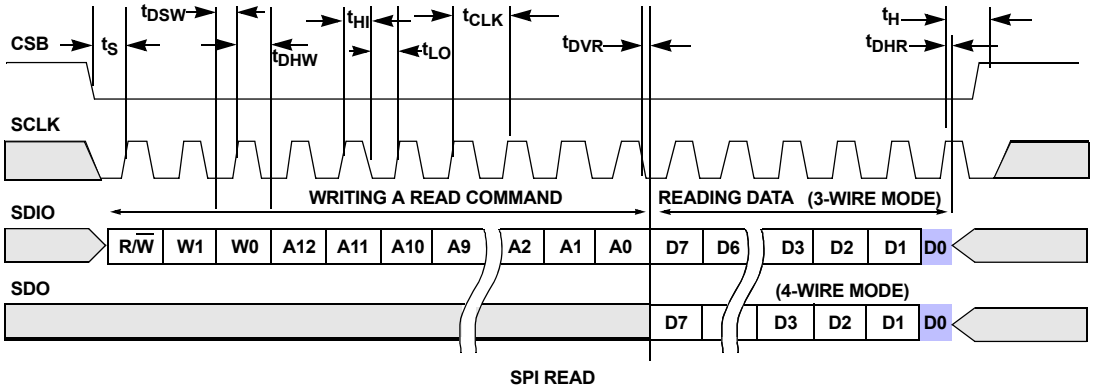

FIGURE 39. SPI READ

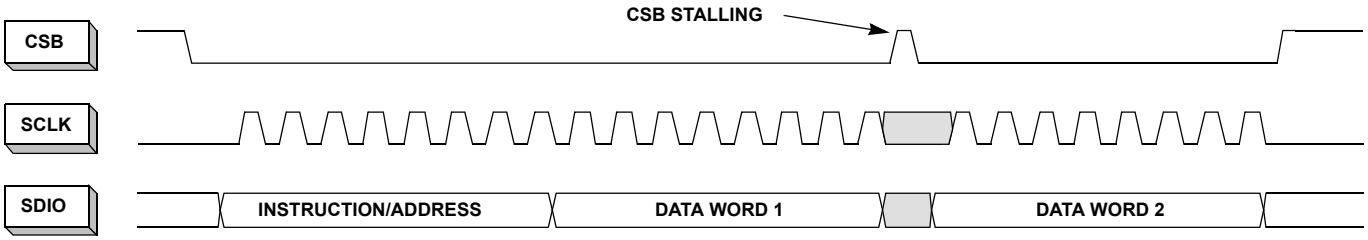

FIGURE 40. 2-BYTE TRANSFER

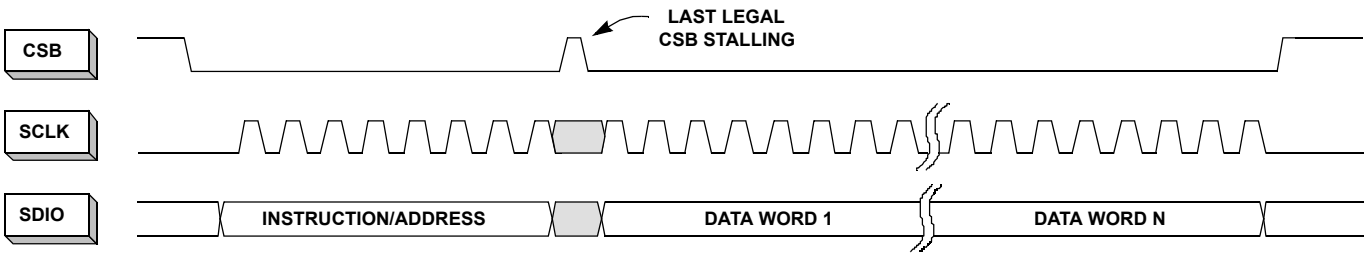

FIGURE 41. N-BYTE TRANSFER

Serial Peripheral Interface

A Serial Peripheral Interface (SPI) bus is used to facilitate configuration of the device and to optimize performance. The SPI bus consists of Chip Select Bar (CSB), Serial Clock (SCLK) Serial Data Output (SDO), and Serial Data Input/Output (SDIO). The maximum SCLK rate is equal to the ADC sample rate (f_{SAMPLE}) divided by 16 for write operations and f_{SAMPLE} divided by 66 for reads. At f_{SAMPLE} = 250MHz, maximum SCLK is 15.63MHz for writing and 3.79MHz for read operations. There is no minimum SCLK rate.

The following sections describe various registers that are used to configure the SPI or adjust performance or functional parameters. Many registers in the available address space (0x00 to 0xFF) are not defined in this document. Additionally, within a defined register there may be certain bits or bit combinations that are reserved. Undefined registers and undefined values within defined registers are reserved and should not be selected. Setting any reserved register or value may produce indeterminate results.

SPI Physical Interface

The Serial Clock (SCLK) pin provides synchronization for the data transfer. By default, all data is presented on the Serial Data Input/Output (SDIO) pin in 3-wire mode. The state of the SDIO pin is set automatically in the communication protocol (described below). A dedicated Serial Data Output (SDO) pin can be activated by setting 0x00[7] high to allow operation in 4-wire mode.

SDO should always be connected to OVDD with a 4.7kΩ resistor even if not used. If the 4.7kΩ resistor is not present the ADC will not exit the reset state.

The SPI port operates in a half duplex master/slave configuration, with the KAD5512P functioning as a slave. Multiple slave devices can interface to a single master in 3-wire mode only, since the SDO output of an unaddressed device is asserted in 4-wire mode.

The Chip Select Bar (CSB) pin determines when a slave device is being addressed. Multiple slave devices can be written to concurrently, but only one slave device can be read from at a given time (again, only in 3-wire mode). If multiple slave devices are selected for reading at the same time, the results will be indeterminate.

The communication protocol begins with an instruction/address phase. The first rising SCLK edge following a HIGH to LOW transition on CSB determines the beginning of the two-byte instruction/address command; SCLK must be static low before the CSB transition. Data can be presented in MSB-first order or LSB-first order. The default is MSB-first, but this can be changed by setting 0x00[6] high. Figures 36 and 37 show the appropriate bit ordering for the MSB-first and LSB-first modes, respectively. In MSB-first mode the address is incremented for multi-byte transfers, while in LSB-first mode it's decremented.

In the default mode, the MSB is R/W, which determines if the data is to be read (active high) or written. The next two bits, W1 and W0, determine the number of data bytes to be read or written (see Table 7). The lower 13 bits contain the first address for the data transfer. This relationship is illustrated in Figure 38, and timing values are given in "Switching Specifications" on page 14.

After the instruction/address bytes have been read, the appropriate number of data bytes are written to or read from the ADC (based on the R/W bit status). The data transfer will continue as long as CSB remains low and SCLK is active. Stalling of the CSB pin is allowed at any byte boundary (instruction/address or data) if the number of bytes being transferred is three or less. For transfers of four bytes or more, CSB is allowed stall in the middle of the instruction/address bytes or before the first data byte. If CSB transitions to a high state after that point the state machine will reset and terminate the data transfer.

TABLE 7. BYTE TRANSFER SELECTION

[W1:W0]	BYTES TRANSFERRED
00	1
01	2
10	3
11	4 or more

Figures 40 and 41 illustrate the timing relationships for 2-byte and N-byte transfers, respectively. The operation for a 3-byte transfer can be inferred from these diagrams.

SPI Configuration

ADDRESS 0x00: CHIP_PORT_CONFIG

Bit ordering and SPI reset are controlled by this register. Bit order can be selected as MSB to LSB (MSB first) or LSB to MSB (LSB first) to accommodate various microcontrollers.

Bit 7 SDO Active

Bit 6 LSB First

Setting this bit high configures the SPI to interpret serial data as arriving in LSB to MSB order.

Bit 5 Soft Reset

Setting this bit high resets all SPI registers to default values.

Bit 4 Reserved

This bit should always be set high.

Bits 3:0 These bits should always mirror bits 4:7 to avoid ambiguity in bit ordering.

ADDRESS 0x02: BURST_END

If a series of sequential registers are to be set, burst mode can improve throughput by eliminating redundant addressing. In 3-wire SPI mode the burst is ended by pulling the CSB pin high. If the device is operated in 2-wire mode the CSB pin is not available. In that case, setting the burst_end address determines the end of the transfer. During a write operation, the user must be cautious to transmit the correct number of bytes based on the starting and ending addresses.

Bits 7:0 Burst End Address

This register value determines the ending address of the burst data.

Device Information

ADDRESS 0x08: CHIP_ID

ADDRESS 0x09: CHIP_VERSION

The generic die identifier and a revision number, respectively, can be read from these two registers.

Indexed Device Configuration/Control

ADDRESS 0x10: DEVICE_INDEX_A

A common SPI map, which can accommodate single-channel or multi-channel devices, is used for all Intersil ADC products. Certain configuration commands (identified as indexed in the SPI map) can be executed on a per-converter basis. This register determines which converter is being addressed for an Indexed command. It is important to note that only a single converter can be addressed at a time.

This register defaults to 00h, indicating that no ADC is addressed. Therefore Bit 0 must be set high in order to execute any Indexed commands. Error code ‘AD’ is returned if any indexed register is read from without properly setting device_index_A.

ADDRESS 0x20: OFFSET_COARSE AND

ADDRESS 0x21: OFFSET_FINE

The input offset of the ADC core can be adjusted in fine and coarse steps. Both adjustments are made via an 8-bit word as detailed in Table 8.

The default value of each register will be the result of the self-calibration after initial power-up. If a register is to be incremented or decremented, the user should first read the register value then write the incremented or decremented value back to the same register.

TABLE 8. OFFSET ADJUSTMENTS

PARAMETER	0x20[7:0] COARSE OFFSET	0x21[7:0] FINE OFFSET
Steps	255	255
–Full-Scale (0x00)	-133 LSB (-47mV)	-5 LSB (-1.75mV)
Mid-Scale (0x80)	0.0 LSB (0.0mV)	0.0LSB
+Full-Scale (0xFF)	+133 LSB (+47mV)	+5 LSB (+1.75mV)
Nominal Step Size	1.04 LSB (0.37mV)	0.04 LSB (0.014mV)

ADDRESS 0x22: GAIN_COARSE

ADDRESS 0x23: GAIN_MEDIUM

ADDRESS 0x24: GAIN_FINE

Gain of the ADC core can be adjusted in coarse, medium and fine steps. Coarse gain is a 4-bit adjustment while medium and fine are 8-bit. Multiple Coarse Gain Bits can be set for a total adjustment range of ±4.2% (‘0011’ =~ -4.2% and ‘1100’ =~ +4.2%). It is recommended to use one of the coarse gain settings (-4.2%, -2.8%, -1.4%, 0, 1.4%, 2.8%, 4.2%) and fine-tune the gain using the registers at 23h and 24h.

The default value of each register will be the result of the self-calibration after initial power-up. If a register is to be incremented or decremented, the user should first read the register value then write the incremented or decremented value back to the same register.

TABLE 9. COARSE GAIN ADJUSTMENT

0x22[3:0]	NOMINAL COARSE GAIN ADJUST (%)
Bit 3	+2.8
Bit 2	+1.4
Bit 1	-2.8
Bit 0	-1.4

TABLE 10. MEDIUM AND FINE GAIN ADJUSTMENTS

PARAMETER	0x23[7:0] MEDIUM GAIN	0x24[7:0] FINE GAIN
Steps	256	256
–Full-Scale (0x00)	-2%	-0.20%
Mid-Scale (0x80)	0.00%	0.00%
+Full-Scale (0xFF)	+2%	+0.2%
Nominal Step Size	0.016%	0.0016%

ADDRESS 0x25: MODES

Two distinct reduced power modes can be selected. By default, the tri-level NAPSLP pin can select normal operation or sleep modes (refer to “Nap/Sleep” on page 21). This functionality can be overridden and controlled through the SPI. This is an indexed

function when controlled from the SPI, but a global function when driven from the pin. This register is not changed by a soft reset.

TABLE 11. POWER-DOWN CONTROL

VALUE	0x25[2:0] POWER-DOWN MODE
000	Pin Control
001	Normal Operation
010	Nap Mode
100	Sleep Mode

Nap mode must be entered by executing the following sequence:

SEQUENCE	REGISTER	VALUE
1	0x10	0x01
2	0x25	0x02
3	0x10	0x02
4	0x25	0x02

Return to Normal operation as follows:

SEQUENCE	REGISTER	VALUE
1	0x10	0x01
2	0x25	0x01
3	0x10	0x02
4	0x25	0x01

Global Device Configuration/Control

ADDRESS 0x71: PHASE_SLIP

When using the clock divider, it's not possible to determine the synchronization of the incoming and divided clock phases. This is particularly important when multiple ADCs are used in a time-interleaved system. The phase slip feature allows the rising edge of the divided clock to be advanced by one input clock cycle when in CLK/4 mode, as shown in Figure 42. Execution of a phase_slip command is accomplished by first writing a '0' to Bit 0 at address 71h followed by writing a '1' to Bit 0 at address 71h (32 sclk cycles).

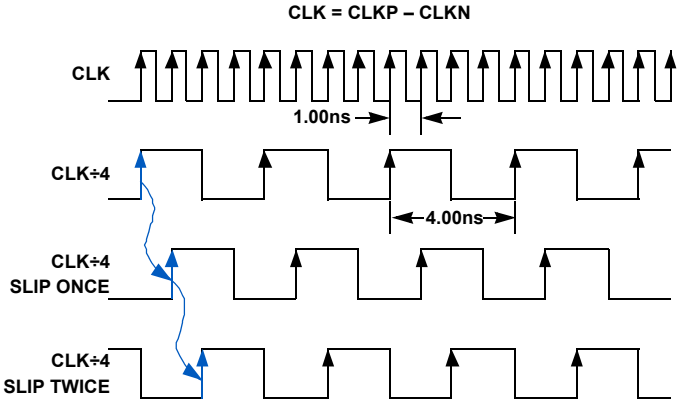

FIGURE 42. PHASE SLIP: CLK÷4 MODE, f_{CLOCK} = 1000MHz

ADDRESS 0x72: CLOCK_DIVIDE

The KAD5512P has a selectable clock divider that can be set to divide by four, two or one (no division). By default, the tri-level CLKDIV pin selects the divisor (refer to "VCM Output" on page 20). This functionality can be overridden and controlled through the SPI, as shown in Table 12. This register is not changed by a soft reset.

TABLE 12. CLOCK DIVIDER SELECTION

VALUE	0x72[2:0] CLOCK DIVIDER
000	Pin Control
001	Divide by 1
010	Divide by 2
100	Divide by 4

ADDRESS 0x73: OUTPUT_MODE_A

The output_mode_A register controls the physical output format of the data, as well as the logical coding. The KAD5512P can present output data in two physical formats: LVDS or LVCMOS. Additionally, the drive strength in LVDS mode can be set high (3mA) or low (2mA). By default, the tri-level OUTMODE pin selects the mode and drive level (refer to "Digital Outputs" on page 21). This functionality can be overridden and controlled through the SPI, as shown in Table 13.

Data can be coded in three possible formats: two's complement, Gray code or offset binary. By default, the tri-level OUTFMT pin selects the data format (refer to "Data Format" on page 22). This functionality can be overridden and controlled through the SPI, as shown in Table 14.

This register is not changed by a soft reset.

TABLE 13. OUTPUT MODE CONTROL

VALUE	0x93[7:5]
000	Pin Control
001	LVDS 2mA
010	LVDS 3mA
100	LVCMOS

TABLE 14. OUTPUT FORMAT CONTROL

VALUE	0x93[2:0] OUTPUT FORMAT
000	Pin Control
001	Two's Complement
010	Gray Code
100	Offset Binary

ADDRESS 0x74: OUTPUT_MODE_B

ADDRESS 0x75: CONFIG_STATUS

Bit 6 DLL Range

This bit sets the DLL operating range to fast (default) or slow.

Internal clock signals are generated by a Delay-Locked Loop (DLL), which has a finite operating range. Table 15 shows the allowable sample rate ranges for the slow and fast settings.

TABLE 15. DLL RANGES

DLL RANGE	MIN	MAX	UNIT
Slow	40	100	MSPS
Fast	80	f_S MAX	MSPS

The output_mode_B and config_status registers are used in conjunction to enable DDR mode and select the frequency range of the DLL clock generator. The method of setting these options is different from the other registers.

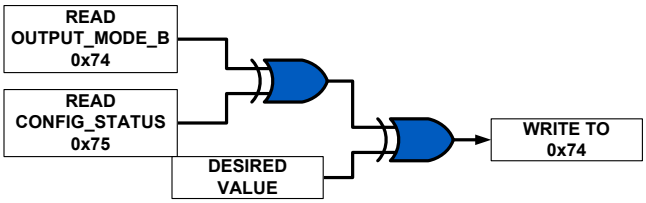

FIGURE 43. SETTING OUTPUT_MODE_B REGISTER

The procedure for setting output_mode_B is shown in Figure 43. Read the contents of output_mode_B and config_status and XOR them. Then XOR this result with the desired value for output_mode_B and write that XOR result to the register.

Device Test

The KAD5512 can produce preset or user defined patterns on the digital outputs to facilitate in situ testing. A static word can be placed on the output bus, or two different words can alternate. In the alternate mode, the values defined as Word 1 and Word 2 (as shown in Table 16) are set on the output bus on alternating clock phases. The test mode is enabled asynchronously to the sample clock, therefore several sample clock cycles may elapse before the data is present on the output bus.

ADDRESS 0xC0: TEST_IO

Bits 7:6 User Test Mode

These bits set the test mode to static (0x00) or alternate (0x01) mode. Other values are reserved.

The four LSBs in this register (Output Test Mode) determine the test pattern in combination with registers 0xC2 through 0xC5. Refer to Table 18.

TABLE 16. OUTPUT TEST MODES

VALUE	0xC0[3:0] OUTPUT TEST MODE	WORD 1	WORD 2
0000	Off		
0001	Midscale	0x8000	N/A

TABLE 16. OUTPUT TEST MODES (Continued)

VALUE	0xC0[3:0] OUTPUT TEST MODE	WORD 1	WORD 2
0010	Positive Full-Scale	0xFFFF	N/A
0011	Negative Full-Scale	0x0000	N/A
0100	Checkerboard	0xAAAA	0x5555
0101	Reserved	N/A	N/A
0110	Reserved	N/A	N/A
0111	One/Zero	0xFFFF	0x0000
1000	User Pattern	user_patt1	user_patt2

ADDRESS 0xC2: USER_PATT1_LSB AND

ADDRESS 0xC3: USER_PATT1_MSB

These registers define the lower and upper eight bits, respectively, of the first user-defined test word.

ADDRESS 0xC4: USER_PATT2_LSB AND

ADDRESS 0xC5: USER_PATT2_MSB

These registers define the lower and upper eight bits, respectively, of the second user-defined test word.

72 Ld/48 Ld Package Options

The KAD5512 is available in both 72 Ld and 48 Ld packages. The 48 Ld package option supports LVDS DDR only. A reduced set of pin selectable functions are available in the 48 Ld package due to the reduced pinout; (OUTMODE, OUTFMT, and CLKDIV pins are not available). Table 17 shows the default state for these functions for the 48 Ld package. Note that these functions are available through the SPI, allowing a user to set these modes as they desire, offering the same flexibility as the 72 Ld package option. DC and AC performance of the ADC is equivalent for both package options.

TABLE 17. 48 LD SPI - ADDRESSABLE FUNCTIONS

FUNCTION	DESCRIPTION	DEFAULT STATE
CLKDIV	Clock Divider	Divide by 1
OUTMODE	Output Driver Mode	LVDS, 3mA (DDR)
OUTFMT	Data Coding	Two's Complement

SPI Memory Map

TABLE 18. SPI MEMORY MAP

	ADDR (HEX)	PARAMETER NAME	BIT 7 (MSB)	BIT 6	BIT 5	BIT 4	BIT 3	BIT 2	BIT 1	BIT 0 (LSB)	DEF. VALUE (HEX)	INDEXED/ GLOBAL
SPI CONFIG	00	port_config	SDO Active	LSB First	Soft Reset			Mirror (Bit 5)	Mirror (Bit 6)	Mirror (Bit 7)	00h	G
	01	reserved	Reserved									
	02	burst_end	Burst end address [7:0]								00h	G
	03-07	reserved	Reserved									
INFO	08	chip_id	Chip ID #								Read only	G
	09	chip_version	Chip Version #								Read only	G
INDEXED DEVICE CONFIG/CONTROL	10	device_index_A	Reserved							ADC00	00h	I
	11-1F	reserved	Reserved									
	20	offset_coarse	Coarse Offset								cal. value	I
	21	offset_fine	Fine Offset								cal. value	I
	22	gain_coarse	Reserved				Coarse Gain				cal. value	I
	23	gain_medium	Medium Gain								cal. value	I
	24	gain_fine	Fine Gain								cal. value	I
	25	modes	Reserved					Power-Down Mode [2:0] 000 = Pin Control 001 = Normal Operation 010 = Nap 100 = Sleep Other Codes = Reserved			00h NOT affected by Soft Reset	I
	26-5F	reserved	Reserved									
	60-6F	reserved	Reserved									
GLOBAL DEVICE CONFIG/CONTROL	70	reserved	Reserved									
	71	phase_slip	Reserved							Next Clock Edge	00h	G
	72	clock_divide						Clock Divide [2:0] 000 = Pin Control 001 = Divide by 1 010 = Divide by 2 100 = Divide by 4 Other Codes = Reserved			00h NOT affected by Soft Reset	G
	73	output_mode_A	Output Mode [2:0] 000 = Pin Control 001 = LVDS 2mA 010 = LVDS 3mA 100 = LVCMOS Other Codes = Reserved					Output Format [2:0] 000 = Pin Control 001 = Two's Complement 010 = Gray Code 100 = Offset Binary Other Codes = Reserved			00h NOT affected by Soft Reset	G
	74	output_mode_B		DLL Range 0 = Fast 1 = Slow		DDR Enable (Note 15)					00h NOT affected by Soft Reset	G
	75	config_status		XOR Result		XOR Result					Read Only	G
	76-BF	reserved	Reserved									

TABLE 18. SPI MEMORY MAP (Continued)

	ADDR (HEX)	PARAMETER NAME	BIT 7 (MSB)	BIT 6	BIT 5	BIT 4	BIT 3	BIT 2	BIT 1	BIT 0 (LSB)	DEF. VALUE (HEX)	INDEXED/ GLOBAL
DEVICE TEST	C0	test_io	User Test Mode [1:0] 00 = Single 01 = Alternate 10 = Reserved 11 = Reserved				Output Test Mode [3:0] 0 = Off 1 = Midscale Short 2 = +FS Short 3 = -FS Short 4 = Checker Board 5 = Reserved 6 = Reserved		7 = One/Zero Word Toggle 8 = User Input 9-15 = Reserved		00h	G
	C1	Reserved	Reserved								00h	G
	C2	user_patt1_lsb	B7	B6	B5	B4	B3	B2	B1	B0	00h	G
	C3	user_patt1_msb	B15	B14	B13	B12	B11	B10	B9	B8	00h	G
	C4	user_patt2_lsb	B7	B6	B5	B4	B3	B2	B1	B0	00h	G
	C5	user_patt2_msb	B15	B14	B13	B12	B11	B10	B9	B8	00h	G
	C6-FF	Reserved	Reserved									

NOTE:

15. At power-up, the DDR Enable bit is at a logic ‘0’ for the 72 Ld package and set to a logic ‘1’ internally for the 48 Ld package by an internal pull-up.

Equivalent Circuits

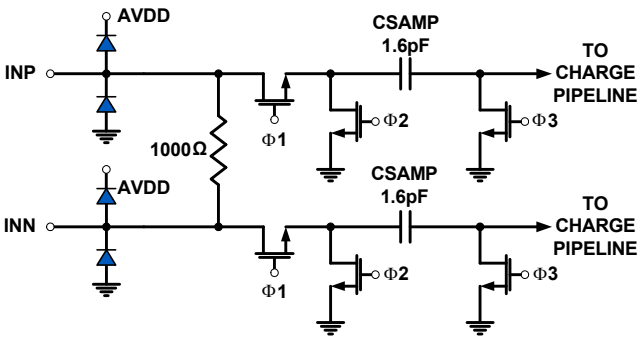

FIGURE 44. ANALOG INPUTS

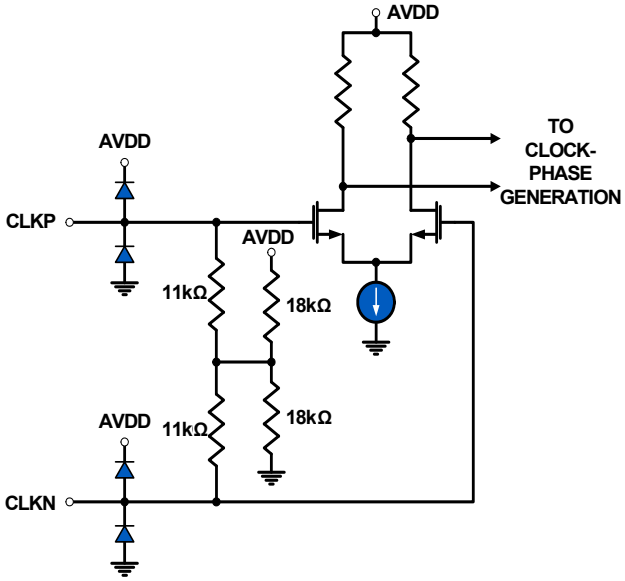

FIGURE 45. CLOCK INPUTS

Equivalent Circuits (Continued)

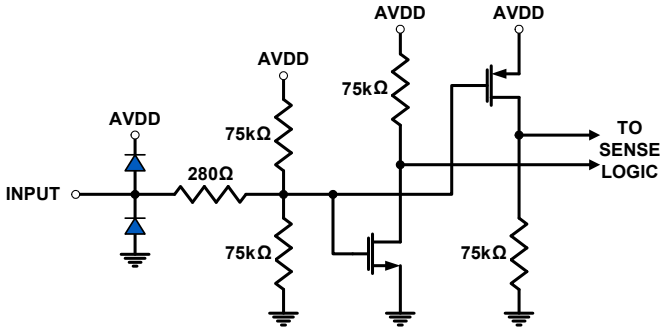

FIGURE 46. TRI-LEVEL DIGITAL INPUTS

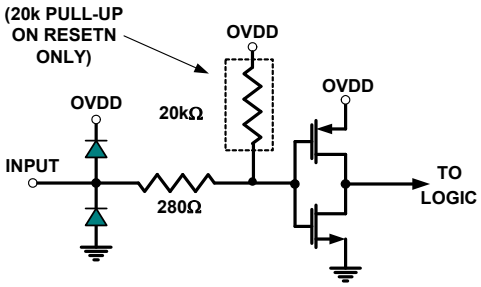

FIGURE 47. DIGITAL INPUTS

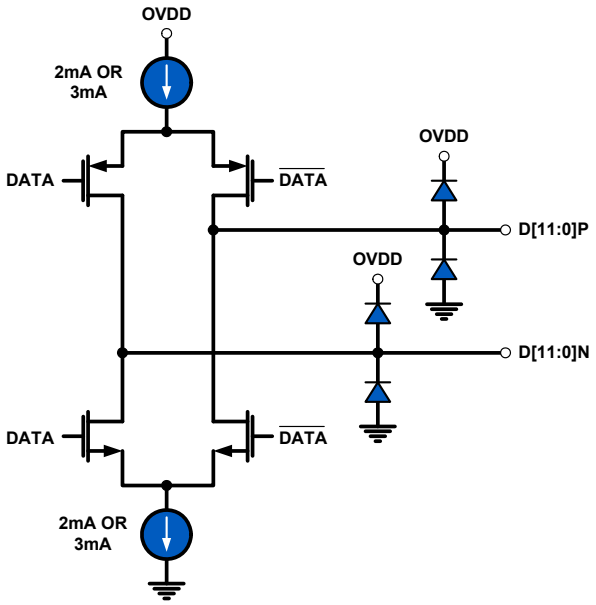

FIGURE 48. LVDS OUTPUTS

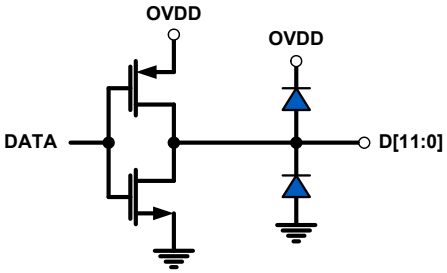

FIGURE 49. CMOS OUTPUTS

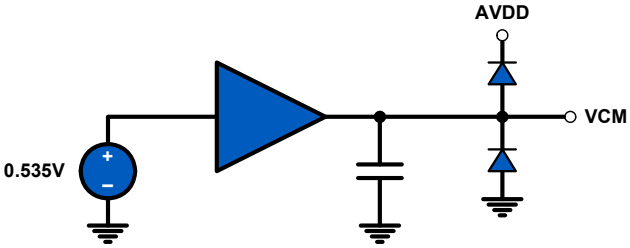

FIGURE 50. VCM_OUT OUTPUT

ADC Evaluation Platform

Intersil offers an ADC Evaluation platform which can be used to evaluate any of the KADxxxxx ADC family. The platform consists of a FPGA based data capture motherboard and a family of ADC daughtercards. This USB based platform allows a user to quickly evaluate the ADC's performance at a user's specific application frequency requirements. More information is available at:

http://www.intersil.com/converters/adc_eval_platform/

Layout Considerations

PCB Layout Example

For an example application circuit and PCB layout, please refer to the evaluation board documentation:

KAD5512P-25

KAD5512P-21

KAD5512P-17

KAD5512P-12

There are separate evaluation boards for the 48 Ld and 72 Ld packages.

Split Ground and Power Planes

Data converters operating at high sampling frequencies require extra care in PC board layout. Many complex board designs benefit from isolating the analog and digital sections. Analog supply and ground planes should be laid out under signal and clock inputs. Locate the digital planes under outputs and logic pins. Grounds should be joined under the chip.

Clock Input Considerations

Use matched transmission lines to the transformer inputs for the analog input and clock signals. Locate transformers and terminations as close to the chip as possible.

Exposed Paddle

The exposed paddle must be electrically connected to analog ground (AVSS) and should be connected to a large copper plane using numerous vias for optimal thermal performance.

Bypass and Filtering

Bulk capacitors should have low equivalent series resistance. Tantalum is a good choice. For best performance, keep ceramic bypass capacitors very close to device pins. Longer traces will increase inductance, resulting in diminished dynamic performance and accuracy. Make sure that connections to ground are direct and low impedance. Avoid forming ground loops.

LVDS Outputs

Output traces and connections must be designed for 50Ω (100Ω differential) characteristic impedance. Keep traces direct and minimize bends where possible. Avoid crossing ground and power-plane breaks with signal traces.

LVCMOS Outputs

Output traces and connections must be designed for 50Ω characteristic impedance.

Unused Inputs

Standard logic inputs (RESETN, CSB, SCLK and SDIO), which will not be operated do not require connection to ensure optimal ADC performance. These inputs can be left floating if they are not used. The SDO output must be connected to OVDD with a 4.7kΩ resistor or the ADC will not exit the reset state. Tri-level inputs (NAPSLP, OUTMODE, OUTFMT and CLKDIV) accept a floating input as a valid state, and therefore should be biased according to the desired functionality.

General PowerPAD Design Considerations

The following figure is a generic illustration of how to use vias to remove heat from a QFN package with an exposed thermal pad. A specific example can be found in the evaluation board PCB layout previously referenced.

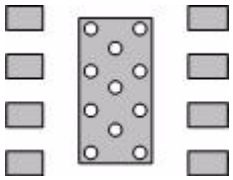

FIGURE 51. PCB VIA PATTERN

Filling the exposed thermal pad area with vias provides optimum heat transfer to the PCB's internal plane(s). Vias should be evenly distributed from edge-to-edge on the exposed pad to maintain a constant temperature across the entire pad. Setting the center-to-center spacing of the vias at three times the via pad radius will provide good heat transfer for high power devices. The vias below the KAD5512P may be spaced further apart as shown on the evaluation board since it is a low-power device. The via diameter should be small but not too small to allow solder wicking during reflow. PCB fabrication and assembly companies can provide specific guidelines based on the layer stack and assembly process.

Connect all vias under the KAD5512P to AVSS. It is important to maximize the heat transfer by avoiding the use of "thermal relief" patterns when connecting the vias to the internal AVSS plane(s).

Definitions

Analog Input Bandwidth is the analog input frequency at which the spectral output power at the fundamental frequency (as determined by FFT analysis) is reduced by 3dB from its full-scale low-frequency value. This is also referred to as full power bandwidth.

Aperture Delay or Sampling Delay is the time required after the rise of the clock input for the sampling switch to open, at which time the signal is held for conversion.

Aperture Jitter is the RMS variation in aperture delay for a set of samples.

Clock Duty Cycle is the ratio of the time the clock wave is at logic high to the total time of one clock period.

Differential Non-Linearity (DNL) is the deviation of any code width from an ideal 1 LSB step.

Effective Number of Bits (ENOB) is an alternate method of specifying Signal to Noise-and-Distortion Ratio (SINAD). In dB, it is calculated as: ENOB = (SINAD - 1.76)/6.02.

Gain Error is the ratio of the difference between the voltages that cause the lowest and highest code transitions to the full-scale voltage less 2 LSB. It is typically expressed in percent.

Integral Non-Linearity (INL) is the maximum deviation of the ADC's transfer function from a best fit line determined by a least squares curve fit of that transfer function, measured in units of LSBs.

Least Significant Bit (LSB) is the bit that has the smallest value or weight in a digital word. Its value in terms of input voltage is $V_{FS}/(2^N-1)$ where N is the resolution in bits.

Missing Codes are output codes that are skipped and will never appear at the ADC output. These codes cannot be reached with any input value.

Most Significant Bit (MSB) is the bit that has the largest value or weight.

Pipeline Delay is the number of clock cycles between the initiation of a conversion and the appearance at the output pins of the data.

Power Supply Rejection Ratio (PSRR) is the ratio of the observed magnitude of a spur in the ADC FFT, caused by an AC signal superimposed on the power supply voltage.

Signal to Noise-and-Distortion (SINAD) is the ratio of the RMS signal amplitude to the RMS sum of all other spectral components below one half the clock frequency, including harmonics but excluding DC.

Signal-to-Noise Ratio (without Harmonics) is the ratio of the RMS signal amplitude to the RMS sum of all other spectral components below one-half the sampling frequency, excluding harmonics and DC.

SNR and SINAD are either given in units of dB when the power of the fundamental is used as the reference, or dBFS (dB to full-scale) when the converter's full-scale input power is used as the reference.

Spurious-Free-Dynamic Range (SFDR) is the ratio of the RMS signal amplitude to the RMS value of the largest spurious spectral component. The largest spurious spectral component may or may not be a harmonic.

Revision History

DATE	REVISION	CHANGE
May 31, 2016	FN6807.5	Updated entire datasheet applying Intersil's new standards. Updated the maximum "Electrical Specifications" for the following: -I_{AVDD} (KAD5512P-25):96 to 101 (KAD5512P-21):89 to 94 (KAD5512P-17):82 to 87 (KAD5512P-12):74 to 79 -NAP Mode (KAD5512P-25):95 to 98.6 (KAD5512P-21):91 to 94.6 (KAD5512P-17):88 to 91.6 (KAD5512P-12):84 to 87.6 Updated 95 to 98.6 in "Nap/Sleep" on page 21. Replaced Products section with About Intersil section.
October 10, 2010	FN6807.4	Throughout: Converted to new Intersil Data sheet Template. Added "" on page 1. Added Note 3 to "Ordering Information" on page 3 ("For Moisture Sensitivity Level (MSL), please see device information page for KAD5512P-25, KAD5512P-21, KAD5512P-17, KAD5512P-12. For more information on MSL please see techbrief TB363.") Added Tjc for both 72 & 48 Ld QFNs to "Thermal Information" on page 9. Added Note 5 to page 9 ("For θ_{JC}, the "case temp" location is the center of the exposed metal pad on the package underside.") Added standard over temperature verbiage to common conditions of "Electrical Specifications" table on page 9 ("Boldface limits apply..") Bolded applicable MIN MAX columns. Added "Products" on page 34. Changed the full power bandwidth (analog input bandwidth) from 1.3GHz to 1.5GHz in "Features"on page 1 and in "Full Power Bandwidth" on page 11. Added the CSB and SCLK pins to the pin list for the IIH, IIL, VIH and VIL specs in the "INPUTS" section of the "Digital Specifications" table on page 12. Clarified the sections describing the RESETN external driver requirements in "Power-On Calibration" on page 18 and "User-Initiated Reset" on page 19. Added PAD connection information to "Pin Description" tables and pin configurations. Added "Recommended Operating Conditions" on page 9. Added typical "ICM" on page 9 for KAD5512P-21 along with descriptive text in the "Analog Input" section on page 20. Added "VCM Output" on page 20. Added a note to "SPI Physical Interface" on page 24 and "Unused Inputs" on page 31 indicating the 4.7kΩ resistor required from SDO to OVDD. Added a link to the evaluation boards in the web product folder in "PCB Layout Example" on page 31. Added "General PowerPAD Design Considerations" on page 31. Added "SINGLE-TONE SPECTRUM AT 105MHz (250MSPS)" on page 1 (same as Figure 18 from "Typical Performance Curves") Moved "PIN-COMPATIBLE FAMILY" from page 1 to page 3. Also, added "Coming Soon" to pre-release devices and added "Package" columns.
October 01, 2009	FN6807.3	1) Added nap mode, sleep mode wake up times to spec table 2) Added CSB, SCLK Setup time specs for nap, sleep modes 3) Added section showing 72pin/48pin package feature differences and default state for clkdiv, outmode, outfmt page 27 4) Changed SPI setup time specs wording in spec table 5) Added 'Reserved' to SPI memory map at address 25H 6) Renumbered Notes 7) Added test platform link on page 31 8) Added ddr enable Note15 for 48 pin/72 pin options 9) Changed pin description table for 72/48 pin option, added DDR notes 10) Changed multi device note in spi physical interface section to show 3-wire application.page 24 11) Updated digital output section for ddr operation page 21 12) Change to fig 26 and fig 27 and description in text 13) Added connect note for thermal pad 14) Formatted Figures 25 and 26 with Intersil Standards 15) Updated Sinad 10MHz SINAD typical (170MSPS) 16) Updated sleep mode Power spec 17) Change to SPI interface section in spec table, timing in cycles now, added write, read specific timing specs. 18) Updated SPI timing diagrams, Figures 37, 38 19) Updated wakeup time description in "Nap/Sleep" on page 21. 20) Removed calibration note in spec table 21) Updated fig 46 label) 22) Updated cal paragraph in user initiated reset section per DC.

Revision History (Continued)

DATE	REVISION	CHANGE
March 04, 2009	FN6807.2	Changed “odd” bits N in Figure 1A - DDR to “even” bits N, Replaced POD L48.7x7E due to changed dimension from “9.80 sq” to “6.80” sq. in land pattern
January 16, 2009	FN6807.1	P1; revised Key Specs P2; added Part Marking column to Order Info P4; moved Thermal Resistance to Thermal Info table and added Theta JA Note 3 per packaging P4-6; revisions throughout spec tables. Removed note from Elec Specs (Nap Mode must be invoked using SPI.) Added notes 9 and 10 to Switching Specs. P9; revised function for Pin 22 OUTMODE, Pin 23 NAPSLP and Pin 70 OUTFMT P11; revised function for Pin 16 NAPSLP P13-15; Performance curves revised throughout P17; User Initiated Reset - revised 2nd sentence of 1st paragraph P19; Nap/Sleep - revised 1st and 2nd sentences of 2nd paragraph P23; Address 0x24: Gain_Fine; added 2 sentences to end of 1st paragraph. Revised Table 8 P22; Serial Peripheral Interface- 1st paragraph; revised 2nd and 4th sentences. P24; removed Figure (PHASE SLIP: CLK÷2 MODE, fCLOCK = 500MHz) Address 0x71: Phase_slip; added sentence to end of paragraph P27; revised Fig 45 P27; Table 16; revised Bits7:4, Addr C0 Throughout; formatted graphics to Intersil standards
December 5, 2008	FN6807.0	Converted to intersil template. Assigned file number FN6807. Rev 0 - first release (as preliminary data sheet) with new file number.
July 30, 2008	Rev 1	Initial Release of Production Data sheet

About Intersil

Intersil Corporation is a leading provider of innovative power management and precision analog solutions. The company's products address some of the largest markets within the industrial and infrastructure, mobile computing and high-end consumer markets.

For the most updated datasheet, application notes, related documentation and related parts, please see the respective product information page found at www.intersil.com.

You may report errors or suggestions for improving this datasheet by visiting www.intersil.com/ask.

Reliability reports are also available from our website at www.intersil.com/support.

© Copyright Intersil Americas LLC 2008-2016. All Rights Reserved.
All trademarks and registered trademarks are the property of their respective owners.

For additional products, see www.intersil.com/en/products.html

Intersil products are manufactured, assembled and tested utilizing ISO9001 quality systems as noted in the quality certifications found at www.intersil.com/en/support/qualandreliability.html

Intersil products are sold by description only. Intersil may modify the circuit design and/or specifications of products at any time without notice, provided that such modification does not, in Intersil's sole judgment, affect the form, fit or function of the product. Accordingly, the reader is cautioned to verify that datasheets are current before placing orders. Information furnished by Intersil is believed to be accurate and reliable. However, no responsibility is assumed by Intersil or its subsidiaries for its use; nor for any infringements of patents or other rights of third parties which may result from its use. No license is granted by implication or otherwise under any patent or patent rights of Intersil or its subsidiaries.

For information regarding Intersil Corporation and its products, see www.intersil.com

Package Outline Drawing

L48.7x7E

48 LEAD QUAD FLAT NO-LEAD PLASTIC PACKAGE

Rev 1, 2/09

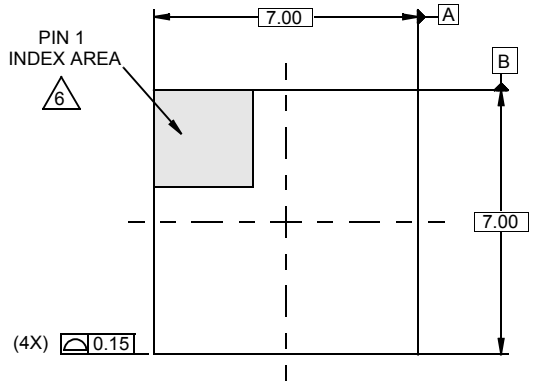

TOP VIEW

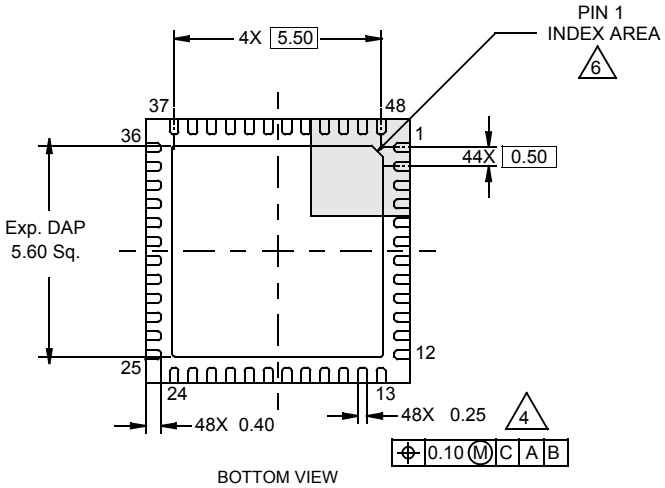

BOTTOM VIEW

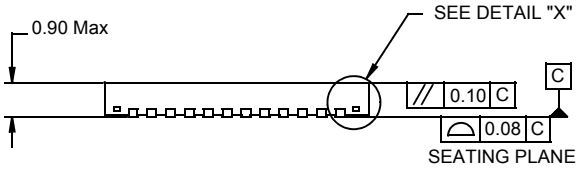

SIDE VIEW

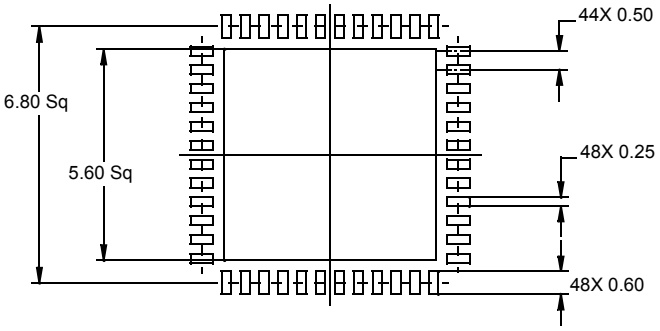

TYPICAL RECOMMENDED LAND PATTERN

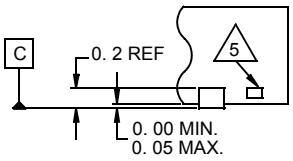

DETAIL "X"

NOTES:

1. Dimensions are in millimeters.
   Dimensions in ( ) for Reference Only.
2. Dimensioning and tolerancing conform to AMSEY14.5m-1994.
3. Unless otherwise specified, tolerance: Decimal ± 0.05
4. Dimension b applies to the metallized terminal and is measured between 0.15mm and 0.30mm from the terminal tip.
5. Tiebar shown (if present) is a non-functional feature.
6. The configuration of the pin #1 identifier is optional, but must be located within the zone indicated. The pin #1 identifier may be either a mold or mark feature.
7. Connect Exp. DAP (PAD) to AVSS with multiple vias to a low thermal impedance plane

Package Outline Drawing

L72.10x10D

72 LEAD QUAD FLAT NO-LEAD PLASTIC PACKAGE

Rev 1, 11/08

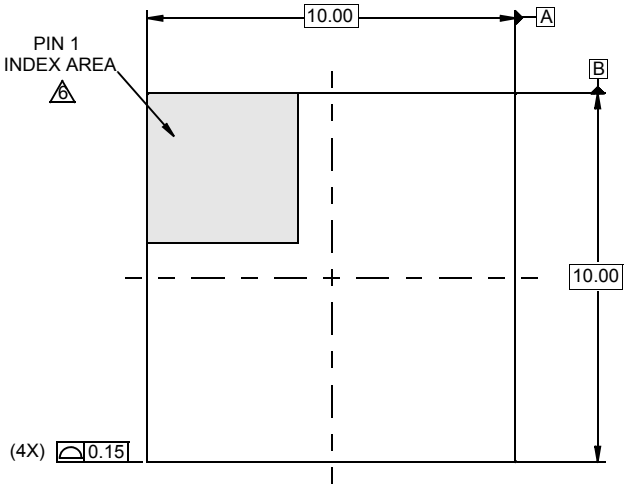

TOP VIEW

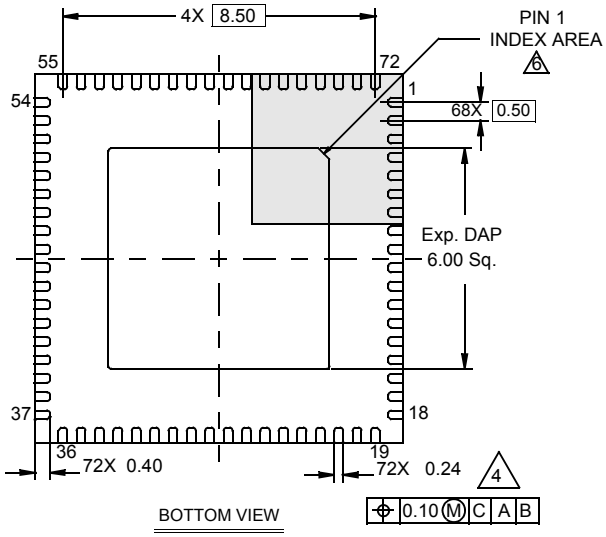

BOTTOM VIEW

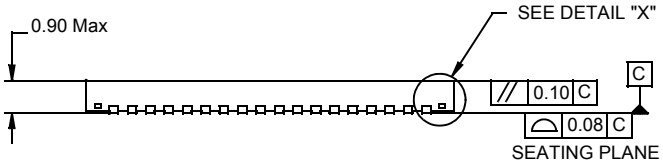

SIDE VIEW

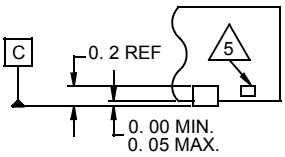

DETAIL "X"

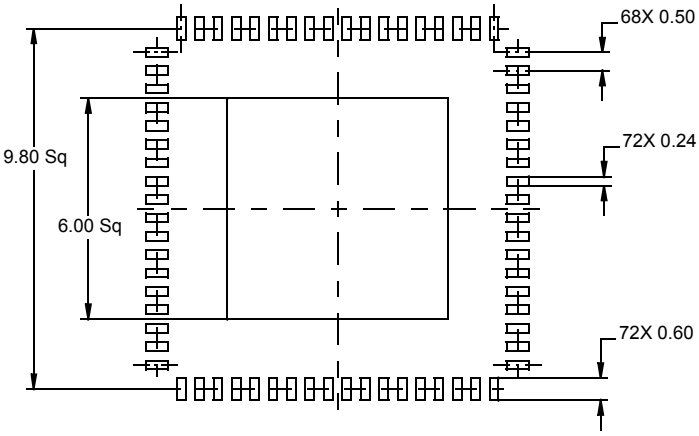

TYPICAL RECOMMENDED LAND PATTERN

NOTES:

1. Dimensions are in millimeters.
   Dimensions in ( ) for Reference Only.
2. Dimensioning and tolerancing conform to AMSEY14.5m-1994.
3. Unless otherwise specified, tolerance: Decimal ± 0.05
4. Dimension b applies to the metallized terminal and is measured between 0.15mm and 0.30mm from the terminal tip.
5. Tiebar shown (if present) is a non-functional feature.
6. The configuration of the pin #1 identifier is optional, but must be located within the zone indicated. The pin #1 identifier may be either a mold or mark feature.
7. Connect Exp. DAP (PAD) to AVSS with multiple vias to a low thermal impedance plane