ADC1412D series

Dual 14-bit ADC; 65 Msps, 80 Msps, 105 Msps or 125 Msps; CMOS or LVDS DDR digital outputs

Rev. 05 — 2 July 2012 Product data sheet

1. General description

The ADC1412D is a dual channel 14-bit Analog-to-Digital Converter (ADC) optimized for high dynamic performance and low power consumption at sample rates up to 125 Msps. Pipelined architecture and output error correction ensure the ADC1412D is accurate enough to guarantee zero missing codes over the entire operating range. Supplied from a single 3 V source, it can handle output logic levels from 1.8 V to 3.3 V in Complementary Metal Oxide Semiconductor (CMOS) mode because of a separate digital output supply. It supports the Low Voltage Differential Signalling (LVDS) Double Data Rate (DDR) output standard. An integrated Serial Peripheral Interface (SPI) allows the user to easily configure the ADC. The device also includes an programmable full-scale SPI to allow a flexible input voltage range of 1 V (p-p) to 2 V (p-p). With excellent dynamic performance from the baseband to input frequencies of 170 MHz or more, the ADC1412D is ideal for use in communications, imaging and medical applications.

2. Features and benefits

- SNR, 72.1 dBFS
- SFDR, 86 dBc
- Sample rate up to 125 Msps
- Clock input divided by 2 to reduce jitter contribution
- Single 3 V supply
- Flexible input voltage range: 1 V to 2 V (p-p)
- CMOS or LVDS DDR digital outputs
- Pin and software compatible with ADC1212D series and ADC1112D125
- Input bandwidth, 600 MHz
- Power dissipation, 855 mW at 80 Msps
- Serial Peripheral Interface (SPI)
- Duty cycle stabilizer
- Fast OuT-of-Range (OTR) detection
- Offset binary, two's complement, gray code
- Power-down and Sleep modes
- HVQFN64 package

3. Applications

- Wireless and wired broadband communications
- Spectral analysis
- Ultrasound equipment
- Portable instrumentation
- Imaging systems
- Software defined radio

4. Ordering information

Table 1. Ordering information

Type number	f_s (Msps)	Package		
		Name	Description	Version
ADC1412D125HN-C1	125	HVQFN64	plastic thermal enhanced very thin quad flat package; no leads; 64 terminals; body 9 × 9 × 0.85 mm	SOT804-3
ADC1412D105HN-C1	105	HVQFN64	plastic thermal enhanced very thin quad flat package; no leads; 64 terminals; body 9 × 9 × 0.85 mm	SOT804-3
ADC1412D080HN-C1	80	HVQFN64	plastic thermal enhanced very thin quad flat package; no leads; 64 terminals; body 9 × 9 × 0.85 mm	SOT804-3
ADC1412D065HN-C1	65	HVQFN64	plastic thermal enhanced very thin quad flat package; no leads; 64 terminals; body 9 × 9 × 0.85 mm	SOT804-3

5. Block diagram

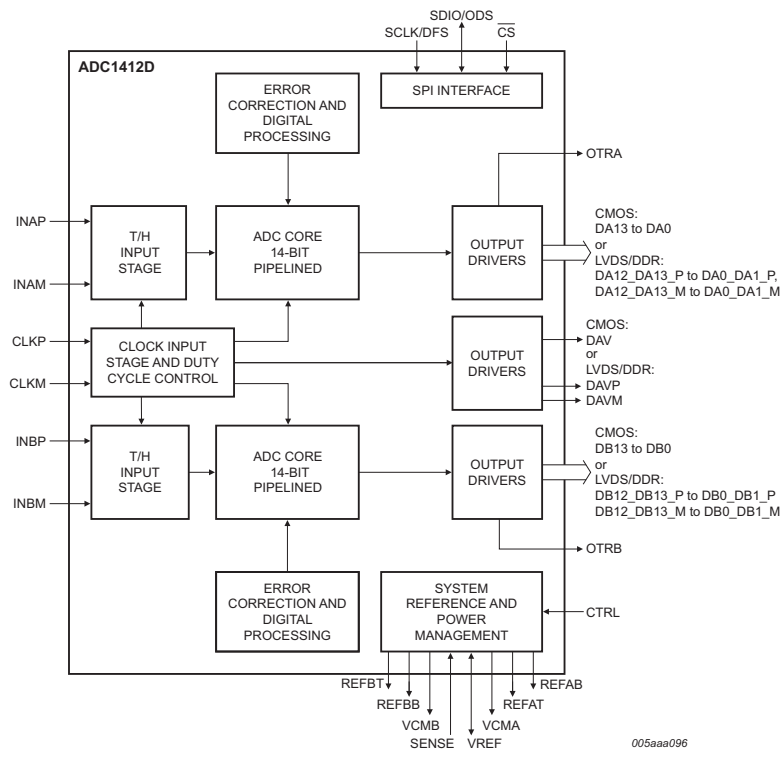

Fig 1. Block diagram

© IDT 2012. All rights reserved.

6. Pinning information

6.1 CMOS outputs selected

6.1.1 Pinning

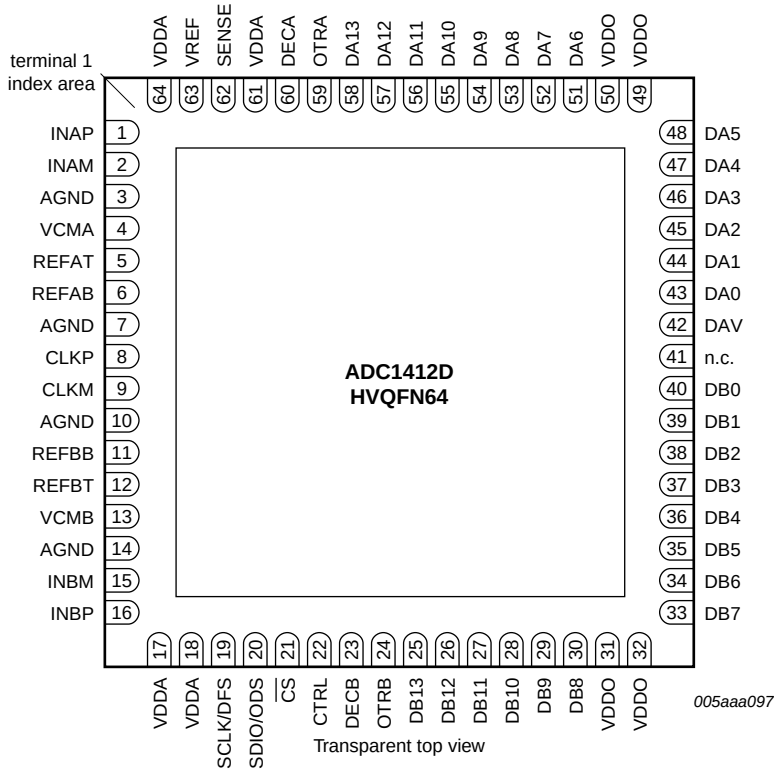

Fig 2. Pin configuration with CMOS digital outputs selected

6.1.2 Pin description

Table 2. Pin description (CMOS digital outputs)

Symbol	Pin	Type [1]	Description
INAP	1	I	analog input; channel A
INAM	2	I	complementary analog input; channel A
AGND	3	G	analog ground
VCMA	4	O	common-mode output voltage; channel A
REFAT	5	O	top reference; channel A
REFAB	6	O	bottom reference; channel A
AGND	7	G	analog ground
CLKP	8	I	clock input
CLKM	9	I	complementary clock input
AGND	10	G	analog ground
REFBB	11	O	bottom reference; channel B
REFBT	12	O	top reference; channel B

© IDT 2012. All rights reserved.

Table 2. Pin description (CMOS digital outputs) *...continued*

Symbol	Pin	Type [1]	Description
VCMB	13	O	common-mode output voltage; channel B
AGND	14	G	analog ground
INBM	15	I	complementary analog input; channel B
INBP	16	I	analog input; channel B
VDDA	17	P	analog power supply
VDDA	18	P	analog power supply
SCLK/DFS	19	I	SPI clock/data format select
SDIO/ODS	20	I/O	SPI data input/output/output data standard
$\overline{CS}$	21	I	SPI chip select, active LOW
CTRL	22	I	control mode select
DECB	23	O	regulator decoupling node; channel B
OTRB	24	O	out of range; channel B
DB13	25	O	data output bit 13 (Most Significant Bit (MSB)); channel B
DB12	26	O	data output bit 12; channel B
DB11	27	O	data output bit 11; channel B
DB10	28	O	data output bit 10; channel B
DB9	29	O	data output bit 9; channel B
DB8	30	O	data output bit 8; channel B
VDDO	31	P	output power supply
VDDO	32	P	output power supply
DB7	33	O	data output bit 7; channel B
DB6	34	O	data output bit 6; channel B
DB5	35	O	data output bit 5; channel B
DB4	36	O	data output bit 4; channel B
DB3	37	O	data output bit 3; channel B
DB2	38	O	data output bit 2; channel B
DB1	39	O	data output bit 1; channel B
DB0	40	O	data output bit 0 (Least Significant Bit (LSB)); channel B
n.c.	41	-	not connected
DAV	42	O	data valid output clock
DA0	43	O	data output bit 0 (LSB); channel A
DA1	44	O	data output bit 1; channel A
DA2	45	O	data output bit 2; channel A
DA3	46	O	data output bit 3; channel A
DA4	47	O	data output bit 4; channel A
DA5	48	O	data output bit 5; channel A
VDDO	49	P	output power supply
VDDO	50	P	output power supply
DA6	51	O	data output bit 6; channel A
DA7	52	O	data output bit 7; channel A
DA8	53	O	data output bit 8; channel A
DA9	54	O	data output bit 9; channel A
DA10	55	O	data output bit 10; channel A
DA11	56	O	data output bit 11; channel A

© IDT 2012. All rights reserved.

Table 2. Pin description (CMOS digital outputs) *...continued*

Symbol	Pin	Type [1]	Description
DA12	57	O	data output bit 12; channel A
DA13	58	O	data output bit 13 (MSB); channel A
OTRA	59	O	out-of-range; channel A
DECA	60	O	regulator decoupling node; channel A
VDDA	61	P	analog power supply
SENSE	62	I	reference programming pin
VREF	63	I/O	voltage reference input/output
VDDA	64	P	analog power supply

[1] P: power supply; G: ground; I: input; O: output; I/O: input/output.

6.2 LVDS DDR outputs selected

6.2.1 Pinning

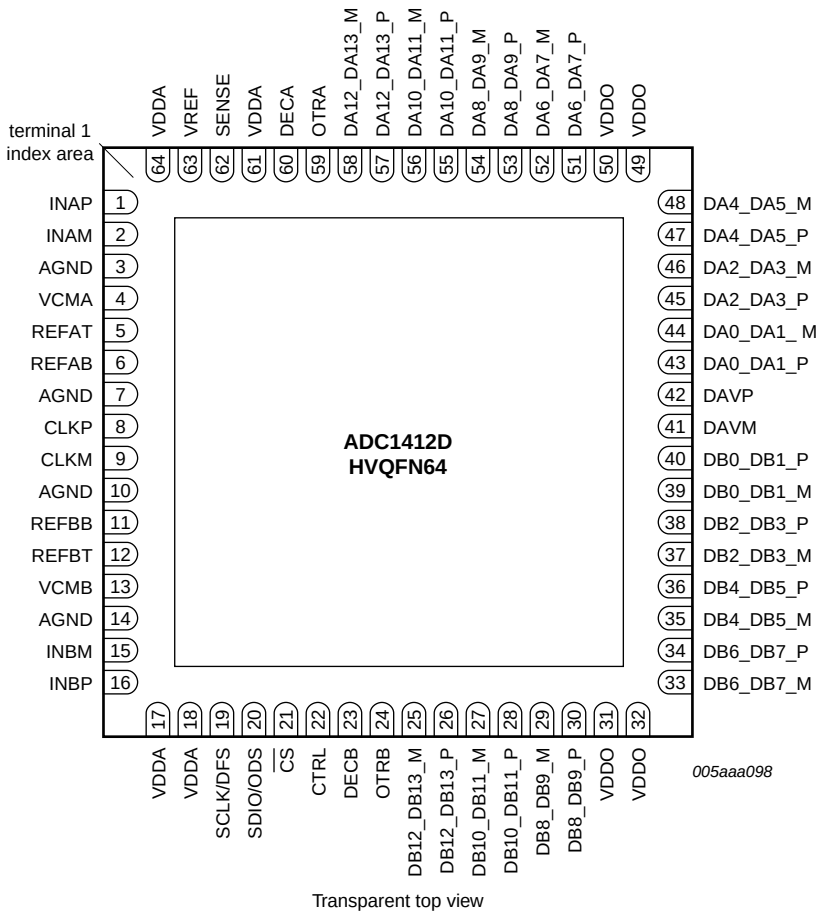

Fig 3. Pin configuration with LVDS DDR digital outputs selected

© IDT 2012. All rights reserved.

6.2.2 Pin description

Table 3. Pin description (LVDS DDR) digital outputs [1]

Symbol	Pin	Type [2]	Description
DB12_DB13_M	25	O	differential output data DB12 and DB13 multiplexed, complement
DB12_DB13_P	26	O	differential output data DB12 and DB13 multiplexed, true
DB10_DB11_M	27	O	differential output data DB10 and DB11 multiplexed, complement
DB10_DB11_P	28	O	differential output data DB10 and DB11 multiplexed, true
DB8_DB9_M	29	O	differential output data DB8 and DB9 multiplexed, complement
DB8_DB9_P	30	O	differential output data DB8 and DB9 multiplexed, true
DB6_DB7_M	33	O	differential output data DB6 and DB7 multiplexed, complement
DB6_DB7_P	34	O	differential output data DB6 and DB7 multiplexed, true
DB4_DB5_M	35	O	differential output data DB4 and DB5 multiplexed, complement
DB4_DB5_P	36	O	differential output data DB4 and DB5 multiplexed, true
DB2_DB3_M	37	O	differential output data DB2 and DB3 multiplexed, complement
DB2_DB3_P	38	O	differential output data DB2 and DB3 multiplexed, true
DB0_DB1_M	39	O	differential output data DB0 and DB1 multiplexed, complement
DB0_DB1_P	40	O	differential output data DB0 and DB1 multiplexed, true
DAVM	41	O	data valid output clock, complement
DAVP	42	O	data valid output clock, true
DA0_DA1_P	43	O	differential output data DA0 and DA1 multiplexed, true
DA0_DA1_M	44	O	differential output data DA0 and DA1 multiplexed, complement
DA2_DA3_P	45	O	differential output data DA2 and DA3 multiplexed, true
DA2_DA3_M	46	O	differential output data DA2 and DA3 multiplexed, complement
DA4_DA5_P	47	O	differential output data DA4 and DA5 multiplexed, true
DA4_DA5_M	48	O	differential output data DA4 and DA5 multiplexed, complement
DA6_DA7_P	51	O	differential output data DA6 and DA7 multiplexed, true
DA6_DA7_M	52	O	differential output data DA6 and DA7 multiplexed, complement
DA8_DA9_P	53	O	differential output data DA8 and DA9 multiplexed, true
DA8_DA9_M	54	O	differential output data DA8 and DA9 multiplexed, complement
DA10_DA11_P	55	O	differential output data DA10 and DA11 multiplexed, true
DA10_DA11_M	56	O	differential output data DA10 and DA11 multiplexed, complement
DA12_DA13_P	57	O	differential output data DA12 and DA13 multiplexed, true
DA12_DA13_M	58	O	differential output data DA12 and DA13 multiplexed, complement

[1] Pins 1 to 24, pin 59 to 64 and pins 31, 32, 49 and 50 are the same for both CMOS and LVDS DDR outputs (see Table 2).

[2] P: power supply; G: ground; I: input; O: output; I/O: input/output.

© IDT 2012. All rights reserved.

7. Limiting values

Table 4. Limiting values
In accordance with the Absolute Maximum Rating System (IEC 60134).

Symbol	Parameter	Conditions	Min	Max	Unit
V_O	output voltage	pins DA13 to DA0 and DB13 to DB0 or pins DA12_DA13_P to DA0_DA1_P, DA12_DA13_M to DA0_DA1_M, DB12_DB13_P to DB0_DB1_P and DB12_DB13_M to DB0_DB1_M	–0.4	+3.9	V
V_{DDA}	analog supply voltage		–0.4	+3.9	V
V_{DDO}	output supply voltage		–0.4	+3.9	V
T_{stg}	storage temperature		–55	+125	°C
T_{amb}	ambient temperature		–40	+85	°C
T_j	junction temperature		-	125	°C

8. Thermal characteristics

Table 5. Thermal characteristics

Symbol	Parameter	Conditions	Typ	Unit
$R_{th(j-a)}$	thermal resistance from junction to ambient	[1]	15.6	K/W
$R_{th(j-c)}$	thermal resistance from junction to case	[1]	6.3	K/W

[1] Value for six layers board in still air with a minimum of 64 thermal vias.

9. Static characteristics

Table 6. Static characteristics[1]

Symbol	Parameter	Conditions	Min	Typ	Max	Unit
Supplies						
V_{DDA}	analog supply voltage		2.85	3.0	3.4	V
V_{DDO}	output supply voltage	CMOS mode	1.65	1.8	3.6	V
		LVDS DDR mode	2.85	3.0	3.6	V
I_{DDA}	analog supply current	f_{clk} = 125 Msps; f_i = 70 MHz	-	400	-	mA
I_{DDO}	output supply current	CMOS mode; f_{clk} = 125 Msps; f_i = 70 MHz	-	18	-	mA
		LVDS DDR mode: f_{clk} = 125 Msps; f_i = 70 MHz	-	92	-	mA

© IDT 2012. All rights reserved.

Table 6. Static characteristics[1] *...continued*

Symbol	Parameter	Conditions	Min	Typ	Max	Unit
P	power dissipation	ADC1412D125; analog supply only	-	1230	-	mW
		ADC1412D105; analog supply only	-	1130	-	mW
		ADC1412D080; analog supply only	-	855	-	mW
		ADC1412D065; analog supply only	-	780	-	mW
		Power-down mode	-	24	-	mW
		Sleep mode	-	80	-	mW
Clock inputs: pins CLKP and CLKM						
LVPECL						
$V_{i(clk)dif}$	differential clock input voltage	peak-to-peak	-	±1.6	-	V
Sine						
$V_{i(clk)dif}$	differential clock input voltage	peak-to-peak	±0.8	±3.0	-	V
LVCMOS						
V_{IL}	LOW-level input voltage		-	-	$0.3V_{DDA}$	V
V_{IH}	HIGH-level input voltage		$0.7V_{DDA}$	-	-	V
Logic input: pin CTRL						
V_{IL}	LOW-level input voltage		-	0	-	V
		LOW-medium level	-	$0.3V_{DDA}$	-	V
		medium-HIGH level	-	$0.6V_{DDA}$	-	V
V_{IH}	HIGH-level input voltage		-	V_{DDA}	-	V
I_{IL}	LOW-level input current		−10	-	+10	μA
I_{IH}	HIGH-level input current		−10	-	+10	μA
Serial peripheral interface: pins $\overline{CS}$, SDIO/ODS, SCLK/DFS						
V_{IL}	LOW-level input voltage		0	-	$0.3V_{DDA}$	V
V_{IH}	HIGH-level input voltage		$0.7V_{DDA}$	-	V_{DDA}	V
I_{IL}	LOW-level input current		−10	-	+10	μA
I_{IH}	HIGH-level input current		−50	-	+50	μA
C_I	input capacitance		-	4	-	pF
Digital outputs, CMOS mode: pins DA13 to DA0, DB13 to DB0, OTRA, OTRB and DAV						
Output levels, V_{DDO} = 3 V						
V_{OL}	LOW-level output voltage		AGND	-	$0.2V_{DDO}$	V
V_{OH}	HIGH-level output voltage		$0.8V_{DDO}$	-	V_{DDO}	V
C_O	output capacitance	high impedance; see Table 10	-	3	-	pF
Output levels, V_{DDO} = 1.8 V						
V_{OL}	LOW-level output voltage		AGND	-	$0.2V_{DDO}$	V
V_{OH}	HIGH-level output voltage		$0.8V_{DDO}$	-	V_{DDO}	V

© IDT 2012. All rights reserved.

Table 6. Static characteristics[1] *...continued*

Symbol	Parameter	Conditions	Min	Typ	Max	Unit
Digital outputs, LVDS DDR mode: pins DA12_DA13_P to DA0_DA1_P, DA12_DA13_M to DA0_DA1_M, DB12_DB13_P to DB0_DB1_P, DB12_DB13_M to DB0_DB1_M, DAVP and DAVM						
Output levels, V_{DDO} = 3 V only, R_L = 100 Ω						
$V_{O(offset)}$	output offset voltage	output buffer current set to 3.5 mA	-	1.2	-	V
$V_{O(dif)}$	differential output voltage	output buffer current set to 3.5 mA	-	350	-	mV
C_O	output capacitance		-	3	-	pF
Analog inputs: pins INAP, INAM, INBP and INBM						
I_I	input current		−5	-	+5	μA
R_I	input resistance		-	19.8	-	kΩ
C_I	input capacitance		-	2.8	-	pF
$V_{I(cm)}$	common-mode input voltage	$V_{INAP} = V_{INAM}$; $V_{INBP} = V_{INBM}$	0.9	1.5	2	V
B_i	input bandwidth		-	600	-	MHz
$V_{I(dif)}$	differential input voltage	peak-to-peak	1	-	2	V
Common-mode output voltage: pins VCMA and VCMB						
$V_{O(cm)}$	common-mode output voltage		-	$0.5V_{DDA}$	-	V
$I_{O(cm)}$	common-mode output current		-	4	-	μA
I/O reference voltage: pin VREF						
V_{VREF}	voltage on pin VREF	output	-	0.5 to 1	-	V
		input	0.5	-	1	V
Accuracy						
INL	integral non-linearity		−5	±1	+5	LSB
DNL	differential non-linearity	guaranteed no missing codes	−0.95	±0.5	+0.95	LSB
E_{offset}	offset error		-	±2	-	mV
E_G	gain error	full-scale	-	±0.5	-	%
$M_{G(CTC)}$	channel-to-channel gain matching		-	1.1	-	%
Supply						
PSRR	power supply rejection ratio	200 mV (p-p) on pin VDDA; f_i = DC	-	−37	-	dB

[1] Typical values measured at V_{DDA} = 3 V, V_{DDO} = 1.8 V, T_{amb} = 25 °C; minimum and maximum values are across the full temperature range T_{amb} = −40 °C to +85 °C at V_{DDA} = 3 V, V_{DDO} = 1.8 V; $V_{INAP} - V_{INAM}$ = −1 dBFS; $V_{INBP} - V_{INBM}$ = −1 dBFS; internal reference mode; applied to CMOS and LVDS interface; unless otherwise specified.

© IDT 2012. All rights reserved.

10. Dynamic characteristics

10.1 Dynamic characteristics

Table 7. Dynamic characteristics[1]

Symbol	Parameter	Conditions	ADC1412D065			ADC1412D080			ADC1412D105			ADC1412D125			Unit
			Min	Typ	Max	Min	Typ	Max	Min	Typ	Max	Min	Typ	Max	
Analog signal processing															
α_{2H}	second harmonic level	f_i = 3 MHz	-	87	-	-	87	-	-	86	-	-	88	-	dBc
		f_i = 30 MHz	-	86	-	-	86	-	-	86	-	-	87	-	dBc
		f_i = 70 MHz	-	85	-	-	85	-	-	84	-	-	85	-	dBc
		f_i = 170 MHz	-	82	-	-	82	-	-	81	-	-	83	-	dBc
α_{3H}	third harmonic level	f_i = 3 MHz	-	86	-	-	86	-	-	85	-	-	87	-	dBc
		f_i = 30 MHz	-	85	-	-	85	-	-	85	-	-	86	-	dBc
		f_i = 70 MHz	-	84	-	-	84	-	-	83	-	-	84	-	dBc
		f_i = 170 MHz	-	81	-	-	81	-	-	80	-	-	82	-	dBc
THD	total harmonic distortion	f_i = 3 MHz	-	83	-	-	83	-	-	82	-	-	84	-	dBc
		f_i = 30 MHz	-	82	-	-	82	-	-	82	-	-	83	-	dBc
		f_i = 70 MHz	-	81	-	-	81	-	-	80	-	-	81	-	dBc
		f_i = 170 MHz	-	78	-	-	78	-	-	77	-	-	79	-	dBc
ENOB	effective number of bits	f_i = 3 MHz	-	11.7	-	-	11.7	-	-	11.6	-	-	11.6	-	bit
		f_i = 30 MHz	-	11.6	-	-	11.5	-	-	11.5	-	-	11.5	-	bit
		f_i = 70 MHz	-	11.5	-	-	11.5	-	-	11.4	-	-	11.4	-	bit
		f_i = 170 MHz	-	11.4	-	-	11.4	-	-	11.3	-	-	11.3	-	bit
SNR	signal-to-noise ratio	f_i = 3 MHz	-	72.1	-	-	72.0	-	-	71.8	-	-	71.4	-	dBFS
		f_i = 30 MHz	-	71.3	-	-	71.2	-	-	71.2	-	-	71.1	-	dBFS
		f_i = 70 MHz	-	70.7	-	-	70.7	-	-	70.6	-	-	70.5	-	dBFS
		f_i = 170 MHz	-	70.2	-	-	70.1	-	-	70.0	-	-	69.9	-	dBFS
SFDR	spurious-free dynamic range	f_i = 3 MHz	-	86	-	-	86	-	-	85	-	-	87	-	dBc
		f_i = 30 MHz	-	85	-	-	85	-	-	85	-	-	86	-	dBc
		f_i = 70 MHz	-	84	-	-	84	-	-	83	-	-	84	-	dBc
		f_i = 170 MHz	-	81	-	-	81	-	-	80	-	-	82	-	dBc

© IDT 2012. All rights reserved.

Table 7. Dynamic characteristics[1] *...continued*

Symbol	Parameter	Conditions	ADC1412D065			ADC1412D080			ADC1412D105			ADC1412D125			Unit
			Min	Typ	Max	Min	Typ	Max	Min	Typ	Max	Min	Typ	Max	
IMD	Intermodulation distortion	f_i = 3 MHz	-	89	-	-	89	-	-	88	-	-	89	-	dBc
		f_i = 30 MHz	-	88	-	-	88	-	-	88	-	-	88	-	dBc
		f_i = 70 MHz	-	87	-	-	87	-	-	86	-	-	86	-	dBc
		f_i = 170 MHz	-	84	-	-	85	-	-	83	-	-	84	-	dBc
$\alpha_{ct(ch)}$	channel crosstalk	f_i = 70 MHz	-	100	-	-	100	-	-	100	-	-	100	-	dBc

[1] Typical values measured at V_{DDA} = 3 V, V_{DDO} = 1.8 V, T_{amb} = 25 °C; minimum and maximum values are across the full temperature range T_{amb} = −40 °C to +85 °C at V_{DDA} = 3 V, V_{DDO} = 1.8 V; $V_{INAP} - V_{INAM}$ = −1 dBFS; $V_{INBP} - V_{INBM}$ = −1 dBFS; internal reference mode; applied to CMOS and LVDS interface; unless otherwise specified.

10.2 Clock and digital output timing

Table 8. Clock and digital output timing characteristics[1]

Symbol	Parameter	Conditions		ADC1412D065			ADC1412D080			ADC1412D105			ADC1412D125			Unit
				Min	Typ	Max	Min	Typ	Max	Min	Typ	Max	Min	Typ	Max	
Clock timing input: pins CLKP and CLKM																
f_{clk}	clock frequency			20	-	65	60	-	80	75	-	105	100	-	125	MHz
$t_{lat(data)}$	data latency time			-	14	-	-	14	-	-	14	-	-	14	-	clock cycles
δ_{clk}	clock duty cycle	DCS_EN = 1		30	50	70	30	50	70	30	50	70	30	50	70	%
		DCS_EN = 0		45	50	55	45	50	55	45	50	55	45	50	55	%
$t_{d(s)}$	sampling delay time			-	0.8	-	-	0.8	-	-	0.8	-	-	0.8	-	ns
t_{wake}	wake-up time			-	76	-	-	76	-	-	76	-	-	76	-	µs
CMOS mode timing: pins DA13 to DA0, DB13 to DB0 and DAV																
t_{PD}	propagation delay	DATA		-	3.9	-	-	3.9	-	-	3.9	-	-	3.9	-	ns
		DAV		-	4.2	-	-	4.2	-	-	4.2	-	-	4.2	-	ns
t_{su}	set-up time			-	8.6	-	-	7.4	-	-	6.1	-	-	5.7	-	ns
t_h	hold time			-	4.8	-	-	3.4	-	-	1.8	-	-	1.4	-	ns
t_r	rise time	DATA	[2]	0.5	-	2.4	0.5	-	2.4	0.5	-	2.4	0.5	-	2.4	ns
		DAV		0.5	-	2.4	0.5	-	2.4	0.5	-	2.4	0.5	-	2.4	ns
t_f	fall time	DATA	[2]	0.5	-	2.4	0.5	-	2.4	0.5	-	2.4	0.5	-	2.4	ns

© IDT 2012. All rights reserved.

Table 8. Clock and digital output timing characteristics[1] *...continued*

Symbol	Parameter	Conditions		ADC1412D065			ADC1412D080			ADC1412D105			ADC1412D125			Unit
				Min	Typ	Max	Min	Typ	Max	Min	Typ	Max	Min	Typ	Max	
LVDS DDR mode timing: pins DA12_DA13_P to DA0_DA1_P, DA12_DA13_M to DA0_DA1_M, DB12_DB13_P to DB0_DB1_P, DB12_DB13_M to DB0_DB1_M, DAVP and DAVM																
t_{PD}	propagation delay	DATA		-	3.9	-	-	3.9	-	-	3.9	-	-	3.9	-	ns
		DAV		-	4.2	-	-	4.2	-	-	4.2	-	-	4.2	-	ns
t_{su}	set-up time			-	5.1	-	-	3.5	-	-	2.1	-	-	1.4	-	ns
t_h	hold time			-	2.0	-	-	2.0	-	-	2.0	-	-	2.0	-	ns
t_r	rise time	DATA	[3]	50	100	200	50	100	200	50	100	200	50	100	200	ps
		DAV		50	100	200	50	100	200	50	100	200	50	100	200	ps
t_f	fall time	DATA	[3]	50	100	200	50	100	200	50	100	200	50	100	200	ps
		DAV		50	100	200	50	100	200	50	100	200	50	100	200	ps

[1] Typical values measured at V_{DDA} = 3 V, V_{DDO} = 1.8 V, T_{amb} = 25 °C; minimum and maximum values are across the full temperature range T_{amb} = –40 °C to +85 °C at V_{DDA} = 3 V, V_{DDO} = 1.8 V; $V_{INAP} - V_{INAM}$ = –1 dBFS; $V_{INBP} - V_{INBM}$ = –1 dBFS; unless otherwise specified.

[2] Measured between 20 % to 80 % of V_{DDO}.

[3] Rise time measured from –50 mV to +50 mV; fall time measured from +50 mV to –50 mV.

© IDT 2012. All rights reserved.

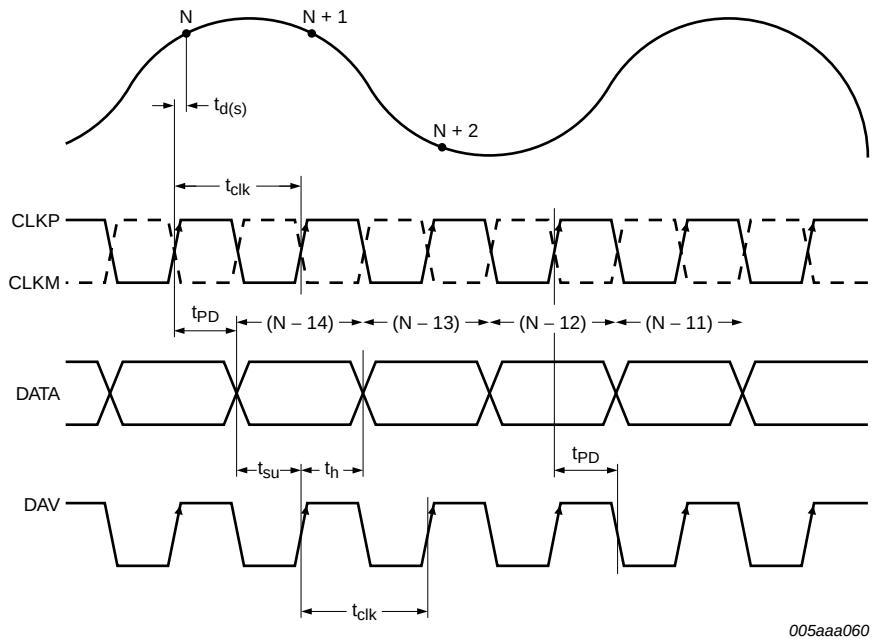

$t_{clk} = 1 / f_{clk}$

Fig 4. CMOS mode timing

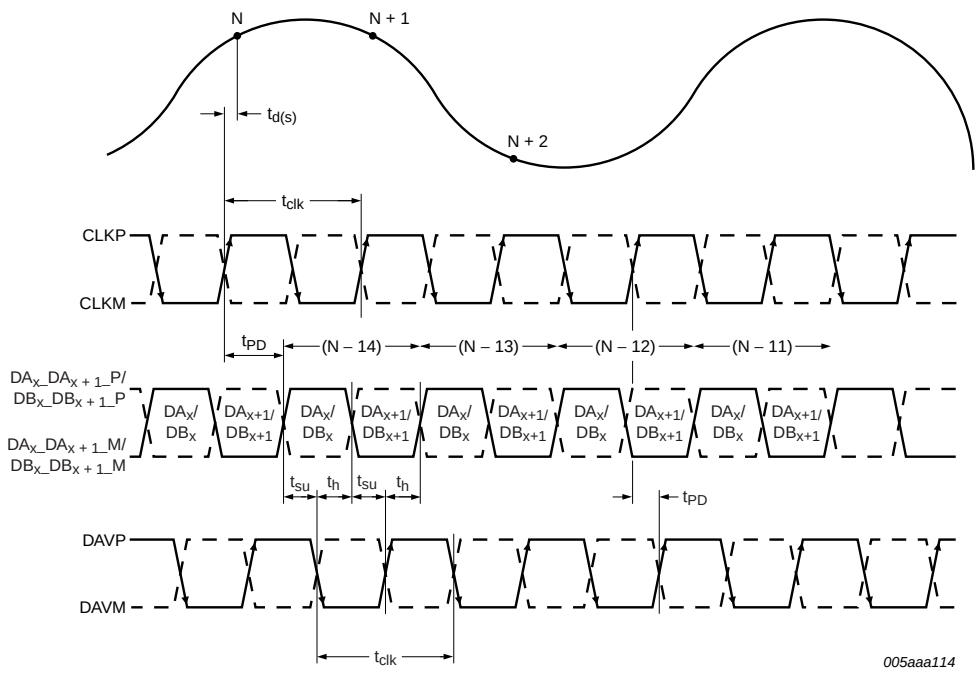

$t_{clk} = 1 / f_{clk}$

Fig 5. LVDS DDR mode timing

© IDT 2012. All rights reserved.

10.3 SPI timings

Table 9. Characteristics

Symbol	Parameter	Conditions	Min	Typ	Max	Unit
SPI timings						
$t_{w(SCLK)}$	SCLK pulse width		-	40	-	ns
$t_{w(SCLKH)}$	SCLK HIGH pulse width		-	16	-	ns
$t_{w(SCLKL)}$	SCLK LOW pulse width		-	16	-	ns
t_{su}	set-up time	data to SCLK HIGH	-	5	-	ns
		$\overline{CS}$ to SCLK HIGH	-	5	-	ns
t_h	hold time	data to SCLK HIGH	-	2	-	ns
		$\overline{CS}$ to SCLK HIGH	-	2	-	ns
$f_{clk(max)}$	maximum clock frequency		-	25	-	MHz

[1] Typical values measured at V_{DDA} = 3 V, V_{DDO} = 1.8 V, T_{amb} = 25 °C; minimum and maximum values are across the full temperature range T_{amb} = −40 °C to +85 °C at V_{DDA} = 3 V, V_{DDO} = 1.8 V.

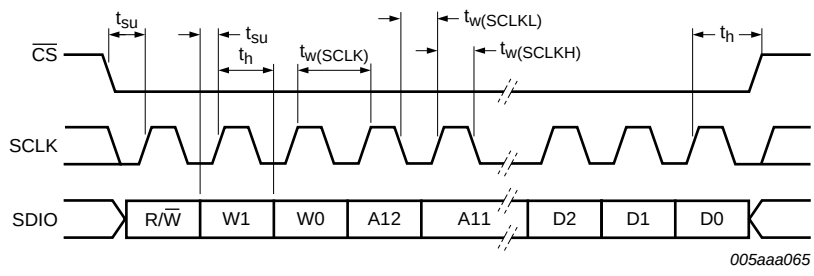

Fig 6. SPI timing

© IDT 2012. All rights reserved.

10.4 Typical characteristics

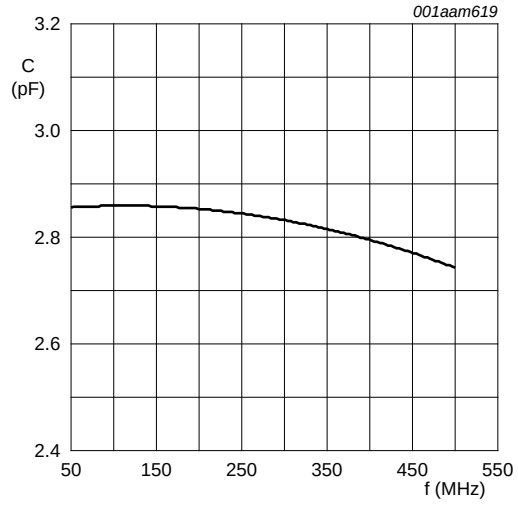

Fig 7. Capacitance as a function of frequency

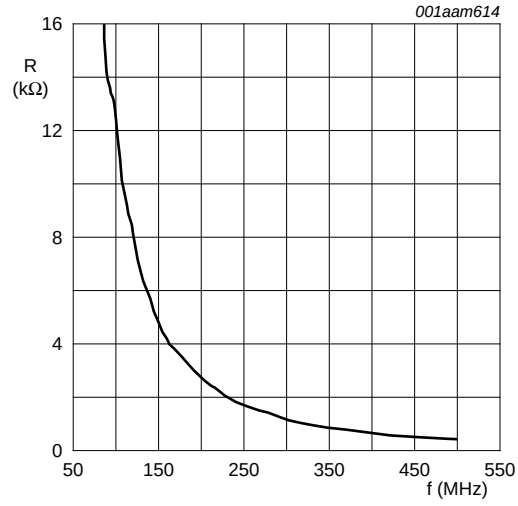

Fig 8. Resistance as a function of frequency

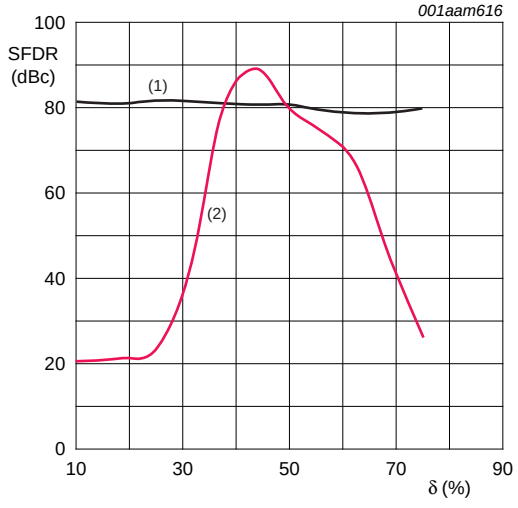

T = 25 °C; V_{DD} = 3 V; f_i = 170 MHz; f_s = 125 Msps

(1) DCS on

(2) DCS off

Fig 9. SFDR as a function of duty cycle (δ)

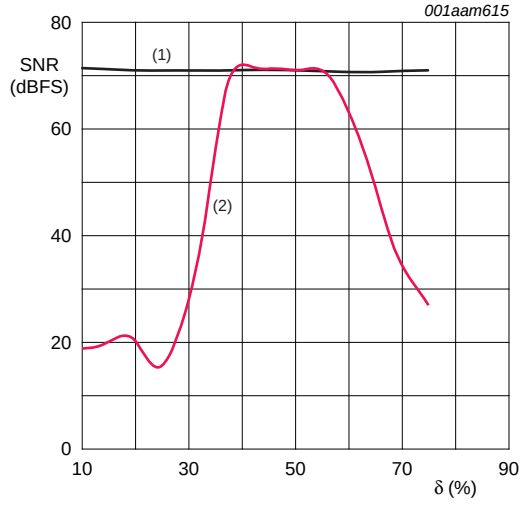

T = 25 °C; V_{DD} = 3 V; f_i = 170 MHz; f_s = 125 Msps

(1) DCS on

(2) DCS off

Fig 10. SNR as a function of duty cycle (δ)

© IDT 2012. All rights reserved.

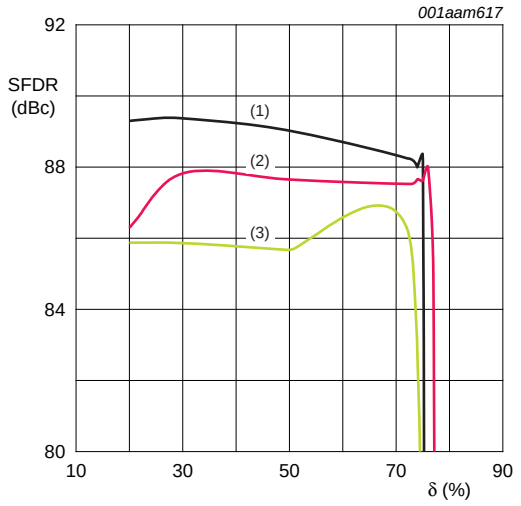

(1) T_{amb} = –40 °C/typical supply voltages

(2) T_{amb} = +25 °C/typical supply voltages

(3) T_{amb} = +90 °C/typical supply voltages

Fig 11. SFDR as a function of duty cycle (δ)

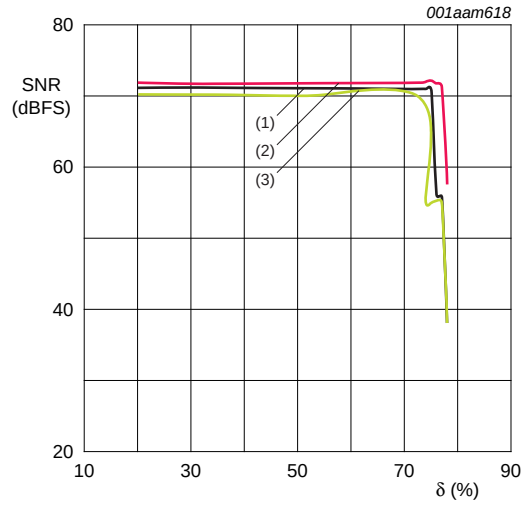

(1) T_{amb} = –40 °C/typical supply voltages

(2) T_{amb} = +25 °C/typical supply voltages

(3) T_{amb} = +90 °C/typical supply voltages

Fig 12. SNR as a function of duty cycle (δ)

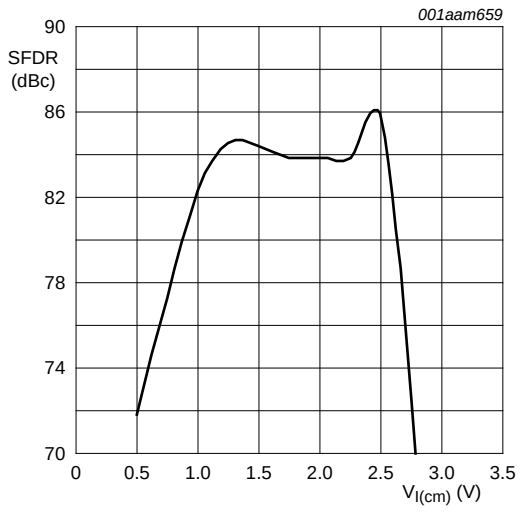

Fig 13. SFDR as a function of common-mode input voltage ($V_{I(cm)}$)

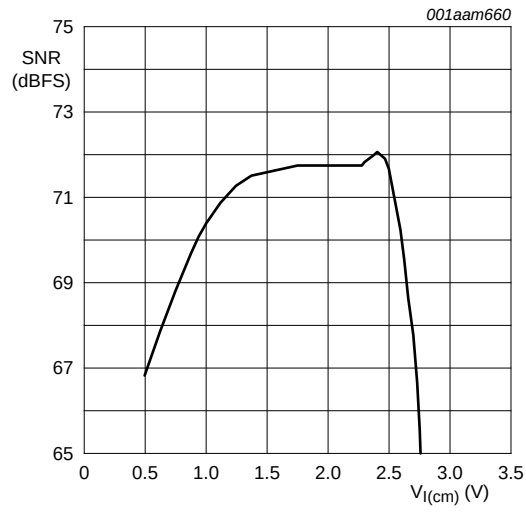

Fig 14. SNR as a function of common-mode input voltage ($V_{I(cm)}$)

© IDT 2012. All rights reserved.

11. Application information

11.1 Device control

The ADC1412D can be controlled via the Serial Peripheral Interface (SPI control mode) or directly via the I/O pins (Pin control mode).

11.1.1 SPI and Pin control modes

The device enters Pin control mode at power-up and remains in this mode as long as pin $\overline{CS}$ is held HIGH. In Pin control mode, the SPI pins SDIO, $\overline{CS}$ and SCLK are used as static control pins.

SPI control mode is enabled by forcing pin $\overline{CS}$ LOW. Once SPI control mode has been enabled, the device remains in this mode. The transition from Pin control mode to SPI control mode is illustrated in Figure 15.

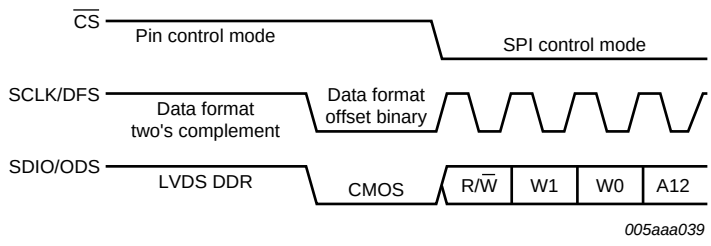

Fig 15. Control mode selection

When the device enters SPI control mode, the output data standard and data format are determined by the level on pin SDIO as soon as a transition is triggered by a falling edge on $\overline{CS}$.

11.1.2 Operating mode selection

The active ADC1412D operating mode (Power-up, Power-down or Sleep) can be selected via the SPI interface (see Table 21) or by using pin CTRL in Pin control mode, as described in Table 10.

Table 10. Operating mode selection via pin CTRL

Pin CTRL	Operating mode	Output high-Z
0	Power-down	yes
$0.3V_{DDA}$	Sleep	yes
$0.6V_{DDA}$	Power-up	yes
V_{DDA}	Power-up	no

11.1.3 Selecting the output data standard

The output data standard (CMOS or LVDS DDR) can be selected via the SPI interface (see Table 24) or by using pin ODS in Pin control mode. LVDS DDR is selected when ODS is HIGH, otherwise CMOS is selected.

© IDT 2012. All rights reserved.

11.1.4 Selecting the output data format

The output data format can be selected via the SPI interface (offset binary, two's complement or gray code; see Table 24) or by using pin DFS in Pin control mode (offset binary or two's complement). Offset binary is selected when DFS is LOW. When DFS is HIGH, two's complement is selected.

11.2 Analog inputs

11.2.1 Input stage

The analog input of the ADC1412D supports a differential or a single-ended input drive. Optimal performance is achieved using differential inputs with the common-mode input voltage ($V_{I(cm)}$) on pins INAP, INAM, INBP and INBM set to $0.5V_{DDA}$.

The full-scale analog input voltage range is configurable between 1 V (p-p) and 2 V (p-p) via a programmable internal reference (see Section 11.3 and Table 23).

The equivalent circuit of the sample-and-hold input stage, including ElectroStatic Discharge (ESD) protection and circuit and package parasitics, is shown in Figure 16.

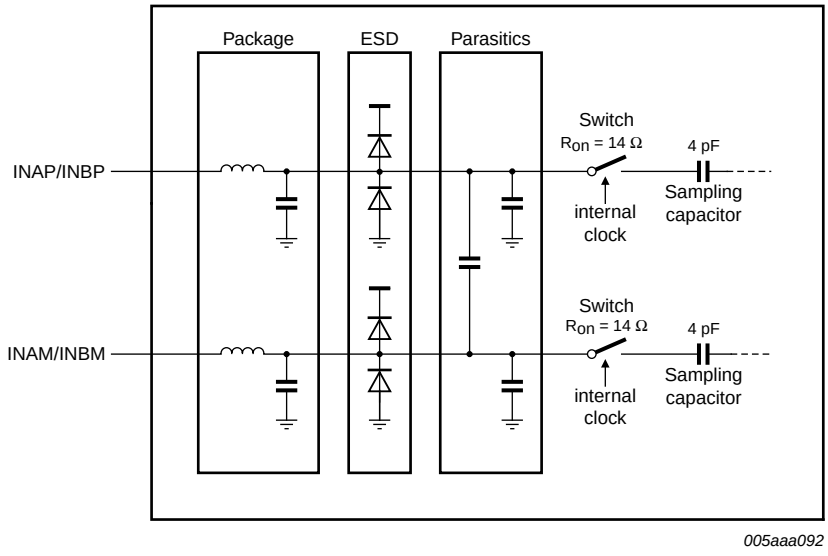

Fig 16. Input sampling circuit

The sample phase occurs when the internal clock (derived from the clock signal on pin CLKP/CLKM) is HIGH. The voltage is then held on the sampling capacitors. When the clock signal goes LOW, the stage enters the hold phase and the voltage information is transmitted to the ADC core.

11.2.2 Anti-kickback circuitry

Anti-kickback circuitry (RC filter in Figure 17) is needed to counteract the effects of charge injection generated by the sampling capacitance.

The RC filter is also used to filter noise from the signal before it reaches the sampling stage. The value of the capacitor should be chosen to maximize noise attenuation without degrading the settling time excessively.

© IDT 2012. All rights reserved.

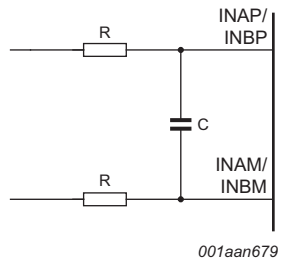

Fig 17. Anti-kickback circuit

The component values are determined by the input frequency and should be selected so as not to affect the input bandwidth.

Table 11. RC coupling versus input frequency, typical values

Input frequency (MHz)	R (Ω)	C (pF)
3	25	12
70	12	8
170	12	8

11.2.3 Transformer

The configuration of the transformer circuit is determined by the input frequency. The configuration shown in Figure 18 would be suitable for a baseband application.

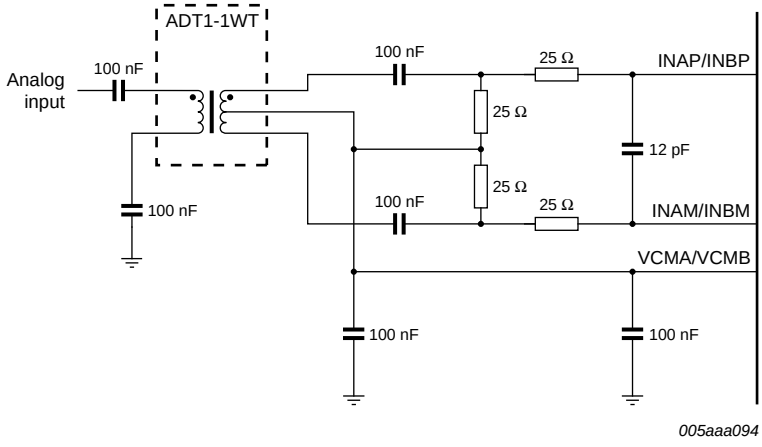

Fig 18. Single transformer configuration suitable for baseband applications

The configuration shown in Figure 19 is recommended for high frequency applications. In both cases, the choice of transformer is a compromise between cost and performance.

© IDT 2012. All rights reserved.

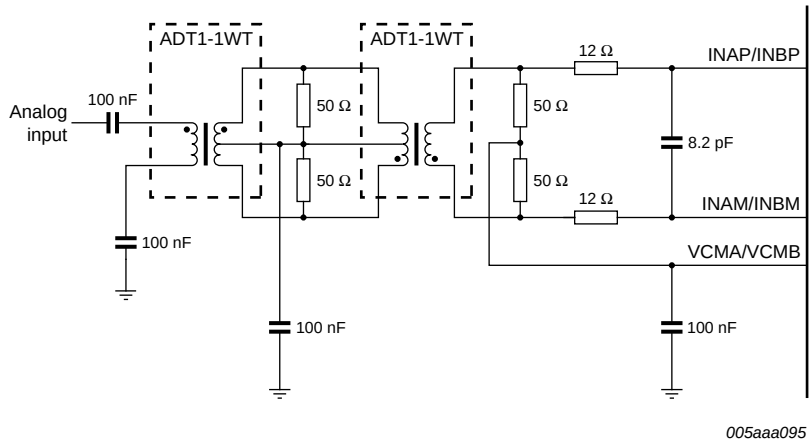

Fig 19. Dual transformer configuration suitable for high intermediate frequency application

11.3 System reference and power management

11.3.1 Internal/external references

The ADC1412D has a stable and accurate built-in internal reference voltage to adjust the ADC full-scale. This reference voltage can be set internally via SPI or with pins VREF and SENSE (programmable in 1 dB steps between 0 dB and −6 dB via control bits INTREF[2:0] when bit INTREF_EN = logic 1; see Table 23). See Figure 21 to Figure 24. The equivalent reference circuit is shown in Figure 20. External reference is also possible by providing a voltage on pin VREF as described in Figure 23.

© IDT 2012. All rights reserved.

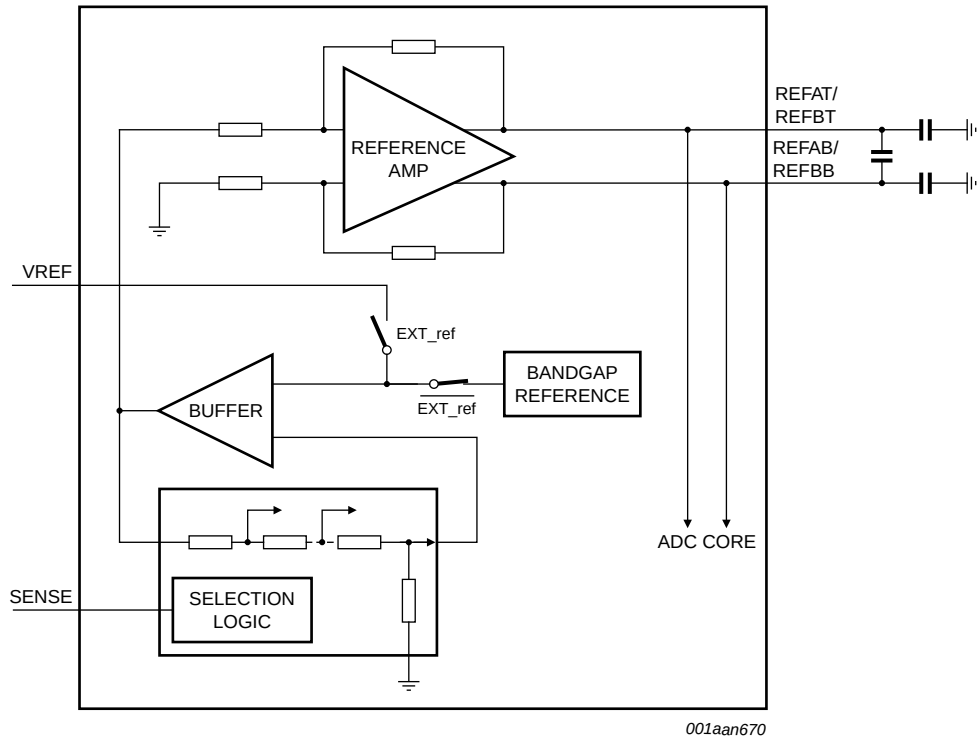

Fig 20. Reference equivalent schematic

If bit INTREF_EN is set to logic 0, the reference voltage is determined either internally or externally as detailed in Table 12.

Table 12. Reference selection

Selection	SPI bit INTREF_EN	SENSE pin	VREF pin	Full-scale (V (p-p))
Internal (Figure 21)	0	AGND	330 pF capacitor to AGND	2 V
Internal (Figure 22)	0	pin VREF connected to pin SENSE and via a 330 pF capacitor to AGND		1 V
External (Figure 23)	0	V_{DDA}	external voltage between 0.5 V and 1 V[1]	1 V to 2 V
Internal via SPI (Figure 24)	1	pin VREF connected to pin SENSE and via 330 pF capacitor to AGND		1 V to 2 V

[1] The voltage on pin VREF is doubled internally to generate the internal reference voltage.

© IDT 2012. All rights reserved.

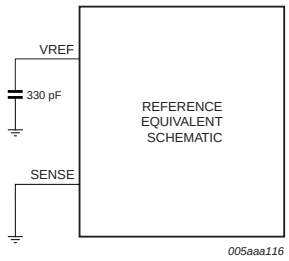

Fig 21. Internal reference, 2 V (p-p) full scale

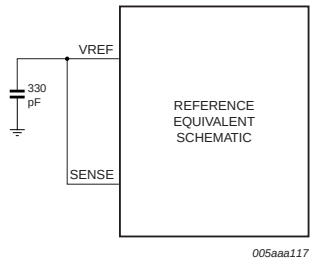

Fig 22. Internal reference, 1 V (p-p) full scale

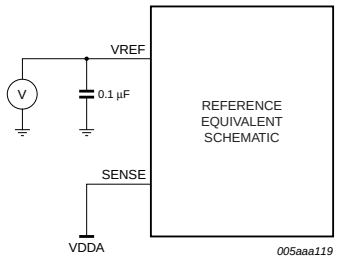

Fig 23. External reference, 1 V (p-p) to 2 V (p-p) full-scale

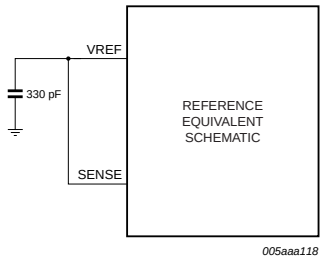

Fig 24. Internal reference via SPI, 1 V (p-p) to 2 V (p-p) full-scale

Figure 21 to Figure 24 illustrate how to connect the SENSE and VREF pins to select the required reference voltage source.

11.3.2 Programmable full-scale

The full-scale is programmable between 1 V (p-p) to 2 V (p-p) (see Table 13).

Table 13. Programmable full-scale

INTREF	Level (dB)	Full-scale (V (p-p))
000	0	2
001	–1	1.78
010	–2	1.59
011	–3	1.42
100	–4	1.26
101	–5	1.12
110	–6	1
111	reserved	x

11.3.3 Common-mode output voltage ($V_{O(cm)}$)

A 0.1 µF filter capacitor should be connected between pin VCMA/VCMB and ground to ensure a low-noise common-mode output voltage. When AC-coupled, pin VCMA/VCMB can then be used to set the common-mode reference for the analog inputs, for instance via a transformer middle point.

© IDT 2012. All rights reserved.

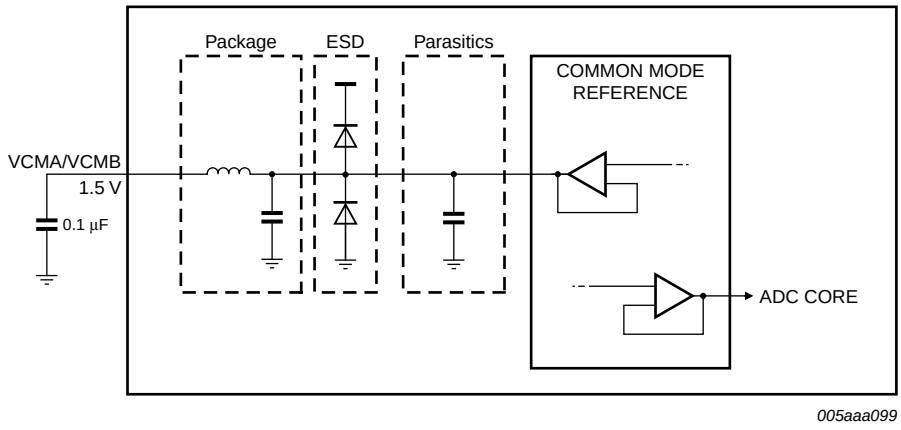

Fig 25. Equivalent schematic of the common-mode reference circuit

11.3.4 Biasing

The common-mode input voltage ($V_{I(cm)}$) on pins INAP/INBP and INAM/INBM should be set externally to $0.5V_{DDA}$ for optimal performance and should always be between 0.9 V and 2 V (see Table 6).

11.4 Clock input

11.4.1 Drive modes

The ADC1412D can be driven differentially (LVPECL). It can also be driven by a single-ended LVCMOS signal connected to pin CLKP (pin CLKM should be connected to ground via a capacitor) or pin CLKM (pin CLKP should be connected to ground via a capacitor).

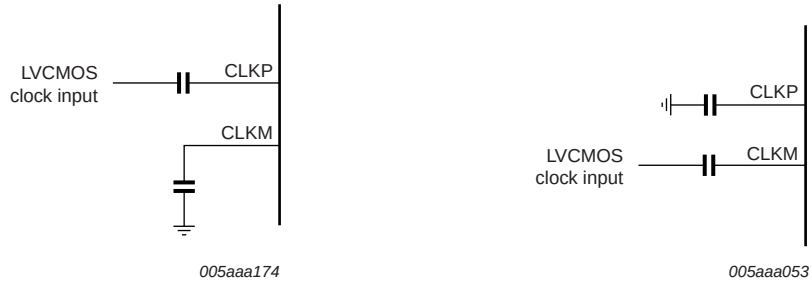

a. Rising edge LVCMOS

b. Falling edge LVCMOS

Fig 26. LVCMOS single-ended clock input

© IDT 2012. All rights reserved.

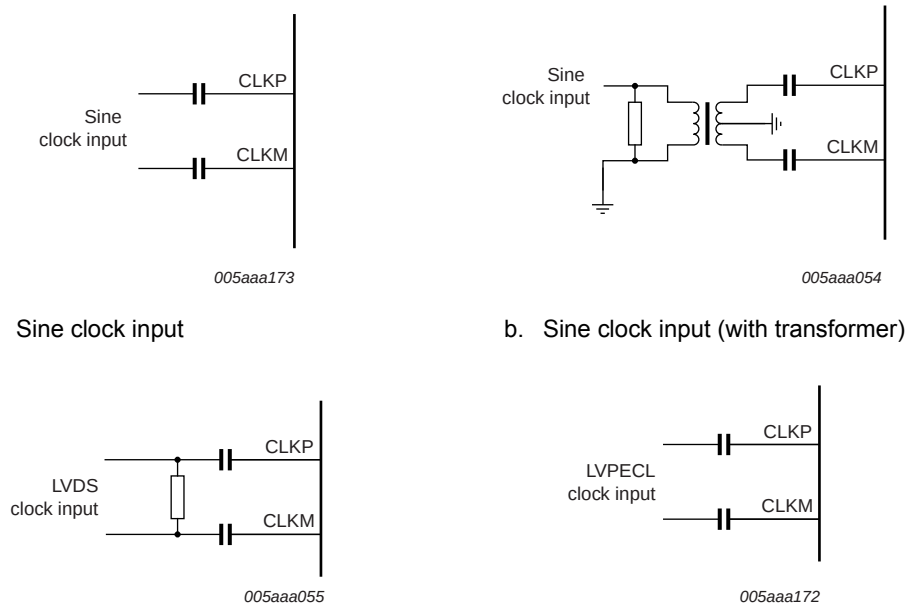

a. Sine clock input

b. Sine clock input (with transformer)

c. LVDS clock input

d. LVPECL clock input

Fig 27. Differential clock input

© IDT 2012. All rights reserved.

11.4.2 Equivalent input circuit

The equivalent circuit of the input clock buffer is shown in Figure 28. The common-mode voltage of the differential input stage is set via internal 5 kΩ resistors.

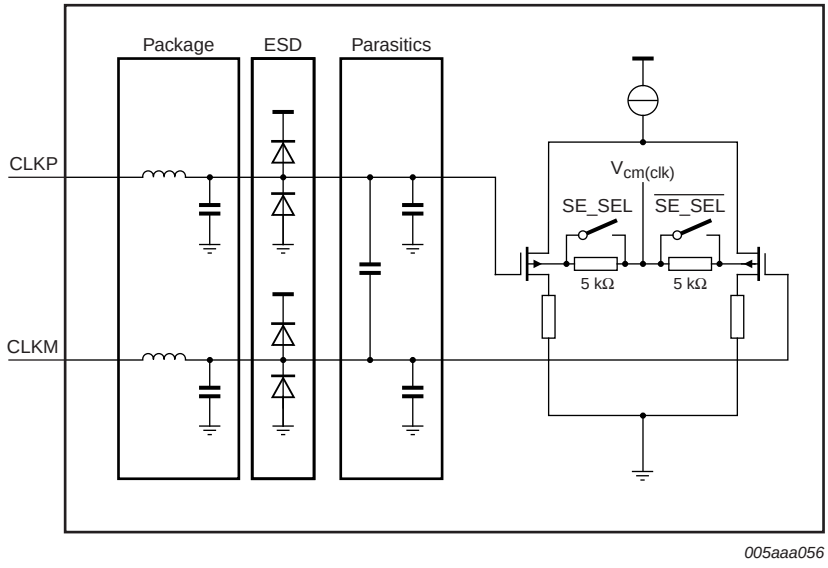

$V_{cm(clk)}$ = common-mode voltage of the differential input stage

Fig 28. Equivalent input circuit

Single-ended or differential clock inputs can be selected via the SPI interface (see Table 22). If single-ended is enabled, the input pin (CLKM or CLKP) is selected via control bit SE_SEL.

If single-ended is implemented without setting bit SE_SEL to the appropriate value, the unused pin should be connected to ground via a capacitor.

11.4.3 Duty cycle stabilizer

The duty cycle stabilizer can improve the overall performance of the ADC by compensating the duty cycle of the input clock signal. When the duty cycle stabilizer is active (bit DCS_EN = logic 1; see Table 22), the circuit can handle signals with duty cycles of between 30 % and 70 % (typical). When the duty cycle stabilizer is disabled (DCS_EN = logic 0), the input clock signal should have a duty cycle of between 45 % and 55 %.

11.4.4 Clock input divider

The ADC1412D contains an input clock divider that divides the incoming clock by a factor of 2 (when bit CLKDIV = logic 1; see Table 22). This feature allows the user to deliver a higher clock frequency with better jitter performance, leading to a better SNR result once acquisition has been performed.

© IDT 2012. All rights reserved.

11.5 Digital outputs

11.5.1 Digital output buffers: CMOS mode

The digital output buffers can be configured as CMOS by setting bit LVDS_CMOS to logic 0 (see Table 24).

Each digital output has a dedicated output buffer. The equivalent circuit of the CMOS digital output buffer is shown in Figure 29. The buffer is powered by a separate AGND/V_{DDO} to ensure 1.8 V to 3.3 V compatibility and is isolated from the ADC core. Each buffer can be loaded by a maximum of 10 pF.

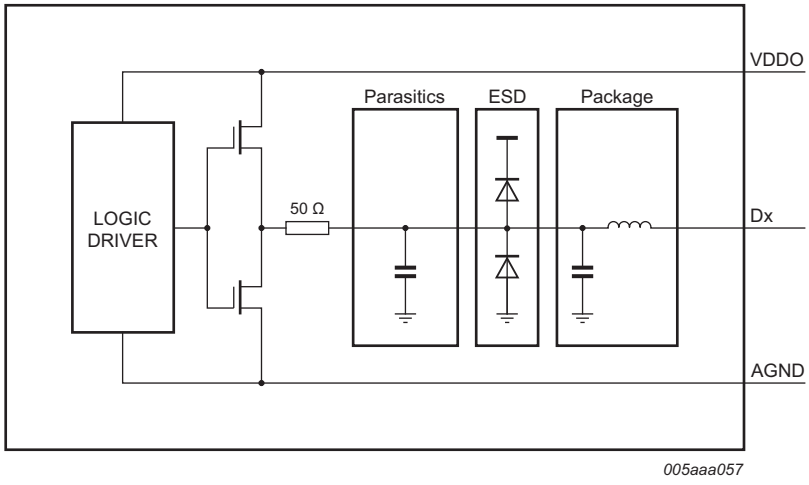

Fig 29. CMOS digital output buffer

The output resistance is 50 Ω and is the combination of an internal resistor and the equivalent output resistance of the buffer. There is no need for an external damping resistor. The drive strength of both DATA and DAV buffers can be programmed via the SPI in order to adjust the rise and fall times of the output digital signals (see Table 31).

© IDT 2012. All rights reserved.

11.5.2 Digital output buffers: LVDS DDR mode

The digital output buffers can be configured as LVDS DDR by setting bit LVDS_CMOS to logic 1 (see Table 24).

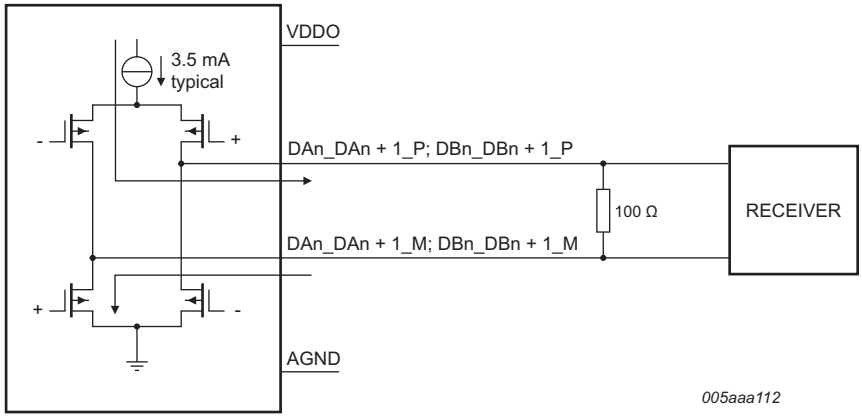

Fig 30. LVDS DDR digital output buffer - externally terminated

Each output should be terminated externally with a 100 Ω resistor (typical) at the receiver side (Figure 30) or internally via SPI control bits LVDS_INT_TER[2:0] (see Figure 31 and Table 33).

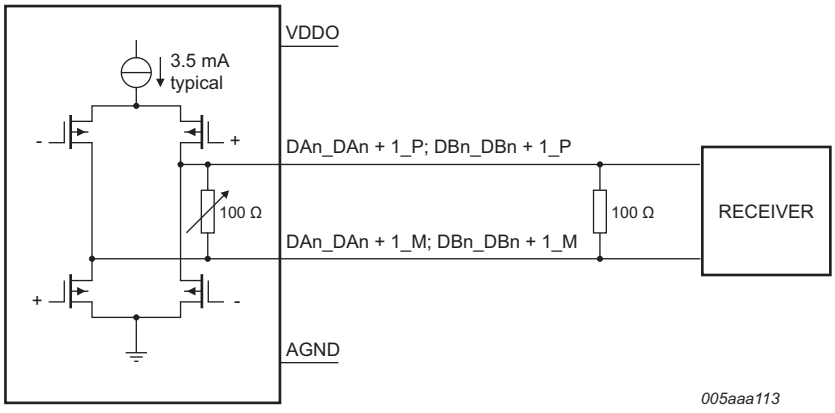

Fig 31. LVDS DDR digital output buffer - internally terminated

The default LVDS DDR output buffer current is set to 3.5 mA. It can be programmed via the SPI (bits DAVI[1:0] and DATAI[1:0]; see Table 32) in order to adjust the output logic voltage levels.

© IDT 2012. All rights reserved.

Table 14. LVDS DDR output register 2

LVDS_INT_TER[2:0]	Resistor value (Ω)
000	no internal termination
001	300
010	180
011	110
100	150
101	10
110	81
111	60

11.5.3 DAta Valid (DAV) output clock

A DAta Valid (DAV) output clock signal is provided that can be used to capture the data delivered by the ADC1412D. Detailed timing diagrams for CMOS and LVDS DDR modes are provided in Figure 4 and Figure 5 respectively. In LVDS DDR mode, it is highly recommended to shift ahead the DAV by 1 ns (bits DAVPHASE[2:0] = 0b100; see Table 25).

11.5.4 OuT-of-Range (OTR)

An out-of-range signal is provided on pin OTRA for ADC channel A and on pin OTRB for ADC channel B. The latency of OTRA/B is fourteen clock cycles. The OTR response can be speeded up by enabling Fast OTR (bit FASTOTR = logic 1; see Table 30). In this mode, the latency of OTRA/B is reduced to only four clock cycles (separately for each ADC channel). The Fast OTR detection threshold (below full-scale) can be programmed via bits FASTOTR_DET[2:0].

Table 15. Fast OTR register

FASTOTR_DET[2:0]	Detection level (dB)
000	−20.56
001	−16.12
010	−11.02
011	−7.82
100	−5.49
101	−3.66
110	−2.14
111	−0.86

11.5.5 Digital offset

By default, the ADC1412D delivers output code that corresponds to the analog input. However, it is possible to add a digital offset to the output code via the SPI (bits DIG_OFFSET[5:0]; see Table 26).

© IDT 2012. All rights reserved.

11.5.6 Test patterns

For test purposes, the ADC1412D can be configured to transmit one of a number of predefined test patterns (via bits TESTPAT_SEL[2:0]; see Table 27). A custom test pattern can be defined by the user (TESTPAT_USER[13:6]; see Table 28 and TESTPAT_USER[5:0]; see Table 29) and is selected when TESTPAT_SEL[2:0] = 101. The selected test pattern is transmitted regardless of the analog input.

11.5.7 Output codes versus input voltage

Table 16. Output codes

$V_{INAP} - V_{INAM}$/ $V_{INBP} - V_{INBM}$	Offset binary	Two's complement	OTRA/OTRB pin
< –1	00 0000 0000 0000	10 0000 0000 0000	1
–1	00 0000 0000 0000	10 0000 0000 0000	0
–0.9998779	00 0000 0000 0001	10 0000 0000 0001	0
–0.9997559	00 0000 0000 0010	10 0000 0000 0010	0
–0.9996338	00 0000 0000 0011	10 0000 0000 0011	0
–0.9995117	00 0000 0000 0100	10 0000 0000 0100	0
....	....	....	0
–0.0002441	01 1111 1111 1110	11 1111 1111 1110	0
–0.0001221	01 1111 1111 1111	11 1111 1111 1111	0
+0	**10 0000 0000 0000**	**00 0000 0000 0000**	0
+0.0001221	10 0000 0000 0001	00 0000 0000 0001	0
+0.0002441	10 0000 0000 0010	00 0000 0000 0010	0
....	....	....	0
+0.9995117	11 1111 1111 1011	01 1111 1111 1011	0
+0.9996338	11 1111 1111 1100	01 1111 1111 1100	0
+0.9997559	11 1111 1111 1101	01 1111 1111 1101	0
+0.9998779	11 1111 1111 1110	01 1111 1111 1110	0
+1	11 1111 1111 1111	01 1111 1111 1111	0
> +1	11 1111 1111 1111	01 1111 1111 1111	1

11.6 Serial Peripheral Interface (SPI)

11.6.1 Register description

The ADC1412D serial interface is a synchronous serial communications port that allows easy interfacing with many commonly used microprocessors. It provides access to the registers that control the operation of the chip.

This interface is configured as a 3-wire type (SDIO as bidirectional pin).

Pin SCLK is the serial clock input and $\overline{CS}$ is the chip select pin.

Each read/write operation is initiated by a LOW level on $\overline{CS}$. A minimum of three bytes is transmitted (two instruction bytes and at least one data byte). The number of data bytes is determined by the value of bits W1 and W2 (see Table 18).

© IDT 2012. All rights reserved.

Table 17. Instruction bytes for the SPI

	MSB							LSB
Bit	7	6	5	4	3	2	1	0
Description	R/$\overline{W}$[1]	W1[2]	W0[2]	A12	A11	A10	A9	A8
	A7	A6	A5	A4	A3	A2	A1	A0

[1] Bit R/$\overline{W}$ indicates whether it is a read (1) or a write (0) operation.

[2] Bits W1 and W0 indicate the number of bytes to be transferred (see Table 18).

Table 18. Number of data bytes to be transferred after the instruction bytes

W1	W0	Number of bytes transmitted
0	0	1 byte
0	1	2 bytes
1	0	3 bytes
1	1	4 bytes or more

Bits A12 to A0 indicate the address of the register being accessed. In the case of a multiple byte transfer, this address is the first register to be accessed. An address counter is increased to access subsequent addresses.

The steps for a data transfer:

1. A falling edge on pin $\overline{CS}$ in combination with a rising edge on pin SCLK determine the start of communications.
2. The first phase is the transfer of the 2-byte instruction.
3. The second phase is the transfer of the data which can vary in length but is always a multiple of 8 bits. The MSB is always sent first (for instruction and data bytes).
4. A rising edge on pin $\overline{CS}$ indicates the end of data transmission.

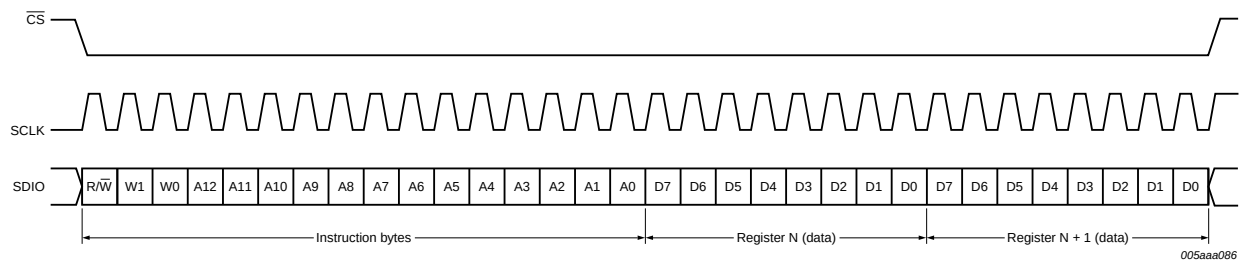

Fig 32. SPI mode timing

11.6.2 Default modes at start-up

During circuit initialization it does not matter which output data standard has been selected. At power-up, the device enters Pin control mode.

A falling edge on pin $\overline{CS}$ triggers a transition to SPI control mode. When the ADC1412D enters SPI control mode, the output data standard (CMOS/LVDS DDR) is determined by the level on pin SDIO (see Figure 33). Once in SPI control mode, the output data standard can be changed via bit LVDS_CMOS (see Table 24).

© IDT 2012. All rights reserved.

When the ADC1412D enters SPI control mode, the output data format (two's complement or offset binary) is determined by the level on pin SCLK (gray code can only be selected via the SPI). Once in SPI control mode, the output data format can be changed via bit DATA_FORMAT[1:0] (see Table 24).

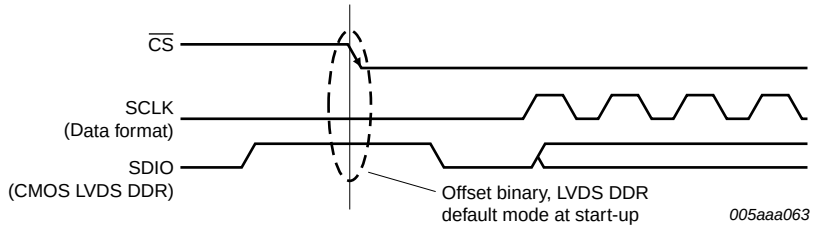

Fig 33. Default mode at start-up: SCLK LOW = offset binary; SDIO HIGH = LVDS DDR

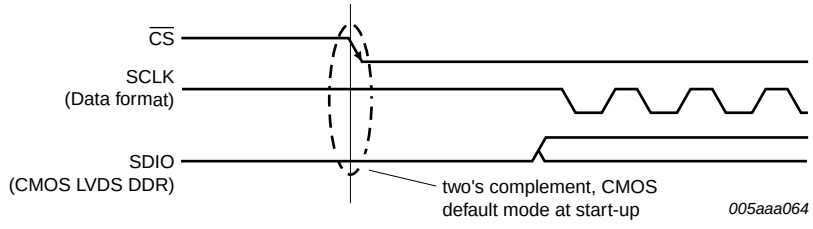

Fig 34. Default mode at start-up: SCLK HIGH = two's complement; SDIO LOW = CMOS

© IDT 2012. All rights reserved.

11.6.3 Register allocation map

Table 19. Register allocation map

Address (hex)	Register name	Access	Bit definition								Default (bin)
			Bit 7	Bit 6	Bit 5	Bit 4	Bit 3	Bit 2	Bit 1	Bit 0	
0003	Channel index	R/W	RESERVED[5:0]						ADCB	ADCA	11111 1111
0005	Reset and operating mode	R/W	SW_RST	RESERVED[2:0]			-	-	OP_MODE[1:0]		0000 0000
0006	Clock	R/W	-	-	-	SE_SEL	DIFF_SE	-	CLKDIV	DCS_EN	0000 0001
0008	Internal reference	R/W	-	-	-	-	INTREF_EN	INTREF[2:0]			0000 0000
0011	Output data standard	R/W	-	-	-	LVDS_CMOS	OUTBUF	OUTBUS_SWAP	DATA_FORMAT[1:0]		0000 0000
0012	Output clock	R/W	-	-	-	-	DAVINV	DAVPHASE[2:0]			0000 1110
0013	Offset	R/W	-	-	DIG_OFFSET[5:0]						0000 0000
0014	Test pattern 1	R/W	-	-	-	-	-	TESTPAT_SEL[2:0]			0000 0000
0015	Test pattern 2	R/W	TESTPAT_USER[13:6]								0000 0000
0016	Test pattern 3	R/W	TESTPAT_USER[5:0]						-	-	0000 0000
0017	Fast OTR	R/W	-	-	-	-	FASTOTR	FASTOTR_DET[2:0]			0000 0000
0020	CMOS output	R/W	-	-	-	-	DAV_DRV[1:0]		DATA_DRV[1:0]		0000 1110
0021	LVDS DDR O/P 1	R/W	-	-	RESERVED	DAVI[1:0]		RESERVED	DATAI[1:0]		0000 0000
0022	LVDS DDR O/P 2	R/W	-	-	-	-	BIT_BYTE_WISE	LVDS_INT_TER[2:0]			0000 0000

© IDT 2012. All rights reserved.

Table 20. Channel index control register (address 0003h) bit description
Default values are highlighted.

Bit	Symbol	Access	Value	Description
7 to 2	RESERVED[5:0]	-	**111111**	reserved
1	ADCB	R/W		next SPI command for ADC B
			0	ADC B not selected
			1	**ADC B selected**
0	ADCA	R/W		next SPI command for ADC A
			0	ADC A not selected
			1	**ADC A selected**

Table 21. Reset and operating mode control register (address 0005h) bit description
Default values are highlighted.

Bit	Symbol	Access	Value	Description
7	SW_RST	R/W		reset digital section
			0	**no reset**
			1	performs a reset on SPI registers
6 to 4	RESERVED[2:0]	-	**000**	reserved
3 to 2	-	-	00	not used
1 to 0	OP_MODE[1:0]	R/W		operating mode
			00	**normal (Power-up)**
			01	Power-down
			10	Sleep
			11	normal (Power-up)

Table 22. Clock control register (address 0006h) bit description
Default values are highlighted.

Bit	Symbol	Access	Value	Description
7 to 5	-	-	000	not used
4	SE_SEL	R/W		single-ended clock input pin select
			0	**CLKM**
			1	CLKP
3	DIFF_SE	R/W		differential/single-ended clock input select
			0	**fully differential**
			1	single-ended
2	RESERVED	-	0	reserved
1	CLKDIV	R/W		clock input divide by 2
			0	**disabled**
			1	enabled
0	DCS_EN	R/W		duty cycle stabilizer
			0	disabled
			1	**enabled**

© IDT 2012. All rights reserved.

Table 23. Internal reference control register (address 0008h) bit description
Default values are highlighted.

Bit	Symbol	Access	Value	Description
7 to 4	-	-	0000	not used
3	INTREF_EN	R/W		programmable internal reference enable
			0	**disable**
			1	active
2 to 0	INTREF[2:0]	R/W		programmable internal reference
			000	**0 dB (FS = 2 V)**
			001	−1 dB (FS = 1.78 V)
			010	−2 dB (FS = 1.59 V)
			011	−3 dB (FS = 1.42 V)
			100	−4 dB (FS = 1.26 V)
			101	−5 dB (FS = 1.12 V)
			110	−6 dB (FS = 1 V)
			111	reserved

Table 24. Output data standard control register (address 0011h) bit description
Default values are highlighted.

Bit	Symbol	Access	Value	Description
7 to 5	-	-	000	not used
4	LVDS_CMOS	R/W		output data standard: LVDS DDR or CMOS
			0	**CMOS**
			1	LVDS DDR
3	OUTBUF	R/W		output buffers enable
			0	**output enabled**
			1	output disabled (high Z)
2	OUTBUS_SWAP	R/W		output bus swap
			0	**no swapping**
			1	output bus is swapped (MSB becomes LSB, vice versa)
1 to 0	DATA_FORMAT[1:0]	R/W		output data format
			00	**offset binary**
			01	two's complement
			10	gray code
			11	offset binary

© IDT 2012. All rights reserved.

Table 25. Output clock register (address 0012h) bit description
Default values are highlighted.

Bit	Symbol	Access	Value	Description
7 to 4	-	-	0000	not used
3	DAVINV	R/W		output clock data valid (DAV) polarity
			0	normal
			1	**inverted**
2 to 0	DAVPHASE[2:0]	R/W		DAV phase select
			000	output clock shifted (ahead) by 6/16 × t_{clk}[1]
			001	output clock shifted (ahead) by 5/16 × t_{clk}[1]
			010	output clock shifted (ahead) by 4/16 × t_{clk}[1]
			011	output clock shifted (ahead) by 3/16 × t_{clk}[1]
			100	output clock shifted (ahead) by 2/16 × t_{clk}[1]
			101	output clock shifted (ahead) by 1/16 × t_{clk}[1]
			110	**default value as defined in timing section**
			111	output clock shifted (delayed) by 1/16 × t_{clk}[1]

[1] $t_{clk} = 1 / f_{clk}$

Table 26. Offset register (address 0013h) bit description
Default values are highlighted.

Bit	Symbol	Access	Value	Description
7 to 6	-	-	00	not used
5 to 0	DIG_OFFSET[5:0]	R/W		digital offset adjustment
			011111	+31 LSB
			...	...
			000000	**0**
			...	...
			100000	−32 LSB

Table 27. Test pattern 1 register (address 0014h) bit description
Default values are highlighted.

Bit	Symbol	Access	Value	Description
7 to 3	-	-	00000	not used
2 to 0	TESTPAT_SEL[2:0]	R/W		digital test pattern select
			000	**off**
			001	mid scale
			010	−FS
			011	+FS
			100	toggle ‘1111..1111’/’0000..0000’
			101	custom test pattern
			110	‘0101..0101’
			111	‘1010..1010.’

© IDT 2012. All rights reserved.

Table 28. Test pattern 2 register (address 0015h) bit description
Default values are highlighted.

Bit	Symbol	Access	Value	Description
7 to 0	TESTPAT_USER[13:6]	R/W	**0000 0000**	**custom digital test pattern (bits 13 to 6)**

Table 29. Test pattern 3 register (address 0016h) bit description
Default values are highlighted.

Bit	Symbol	Access	Value	Description
7 to 2	TESTPAT_USER[5:0]	R/W	**000000**	**custom digital test pattern (bits 5 to 0)**
1 to 0	-	-	00	not used

Table 30. Fast OTR register (address 0017h) bit description
Default values are highlighted.

Bit	Symbol	Access	Value	Description
7 to 4	-	-	0000	not used
3	FASTOTR	R/W		fast OuT-of-Range (OTR) detection
			0	**disabled**
			1	enabled
2 to 0	FASTOTR_DET[2:0]	R/W		set fast OTR detection level
			000	**−20.56 dB**
			001	−16.12 dB
			010	−11.02 dB
			011	−7.82 dB
			100	−5.49 dB
			101	−3.66 dB
			110	−2.14 dB
			111	−0.86 dB

Table 31. CMOS output register (address 0020h) bit description
Default values are highlighted.

Bit	Symbol	Access	Value	Description
7 to 4	-	-	0000	not used
3 to 2	DAV_DRV[1:0]	R/W		drive strength for DAV CMOS output buffer
			00	low
			01	medium
			10	high
			11	**very high**
1 to 0	DATA_DRV[1:0]	R/W		drive strength for data CMOS output buffer
			00	low
			01	medium
			10	**high**
			11	very high

© IDT 2012. All rights reserved.

Table 32. LVDS DDR 1 output register (address 0021h) bit description
Default values are highlighted.

Bit	Symbol	Access	Value	Description
7 to 6	-	-	00	not used
5	RESERVED	-	0	reserved
4 to 3	DAVI[1:0]	R/W		LVDS current for DAV LVDS buffer
			00	**3.5 mA**
			01	4.5 mA
			10	1.25 mA
			11	2.5 mA
2	RESERVED	-	0	reserved
1 to 0	DATAI[1:0]	R/W		LVDS current for data LVDS buffer
			00	**3.5 mA**
			01	4.5 mA
			10	1.25 mA
			11	2.5 mA

Table 33. LVDS DDR 2 output register (address 0022h) bit description
Default values are highlighted.

Bit	Symbol	Access	Value	Description
7 to 4	-	-	0000	not used
3	BIT_BYTE_WISE	R/W		DDR mode for LVDS output
			0	bit wise (even data bits output on DAV rising edge/odd data bits output on DAV falling edge)
			1	byte wise (MSB data bits output on DAV rising edge/LSB data bits output on DAV falling edge)
2 to 0	LVDS_INT_TER[2:0]	R/W		internal termination for LVDS buffer (DAV and data)
			000	no internal termination
			001	300 Ω
			010	180 Ω
			011	110 Ω
			100	150 Ω
			101	100 Ω
			110	81 Ω
			111	60 Ω

© IDT 2012. All rights reserved.

12. Package outline

HVQFN64: plastic thermal enhanced very thin quad flat package; no leads; 64 terminals; body 9 x 9 x 0.85 mm **SOT804-3**

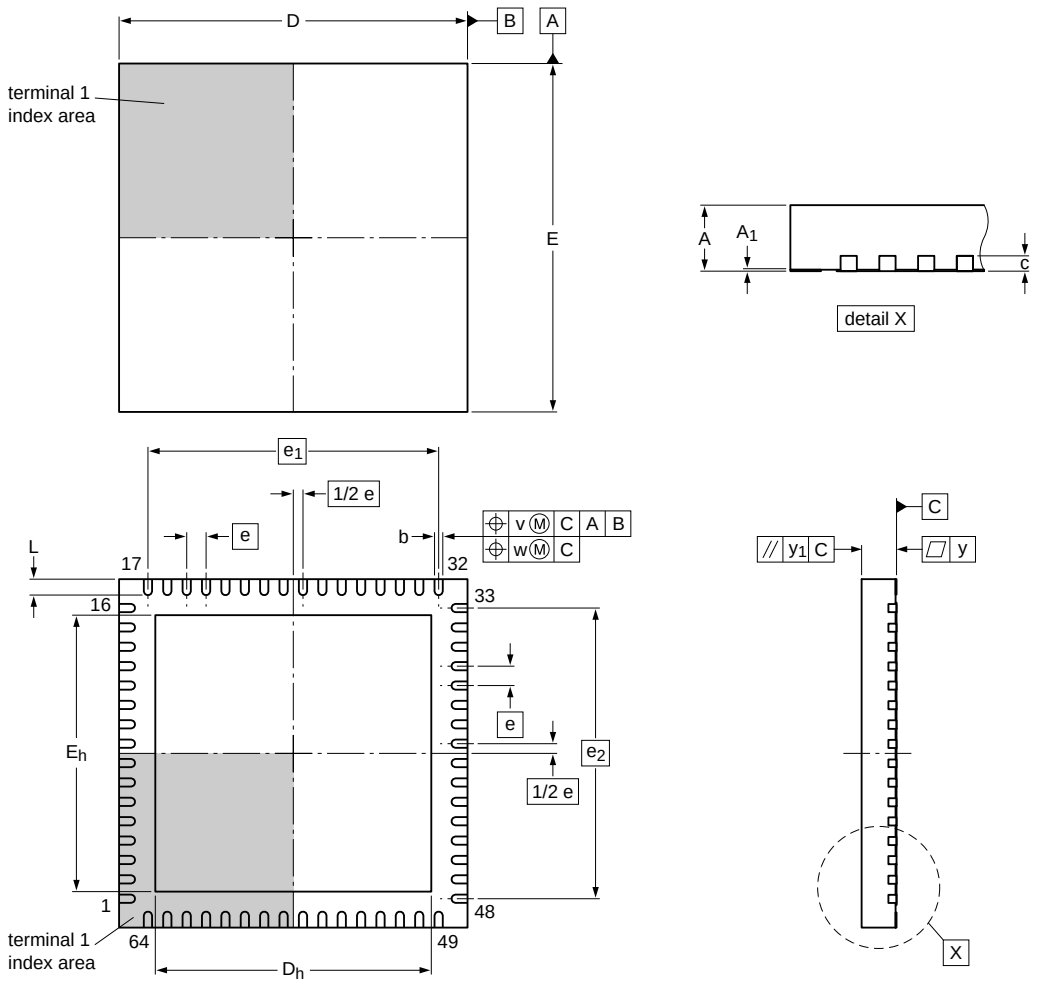

Dimensions

Unit		A	A_1	b	c	D(1)	D_h	E(1)	E_h	e	e_1	e_2	L	v	w	y	y_1
	max	1.00	0.05	0.30		9.1	7.25	9.1	7.25				0.5				
mm	nom	0.85	0.02	0.21	0.2	9.0	7.10	9.0	7.10	0.5	7.5	7.5	0.4	0.1	0.05	0.05	0.1
	min	0.80	0.00	0.18		8.9	6.95	8.9	6.95				0.3				

Note
1. Plastic or metal protrusions of 0.075 mm maximum per side are not included.

sot804-3_po

Outline version	References				European projection	Issue date
	IEC	JEDEC	JEITA			
SOT804-3	- - -	- - -	- - -			~~09-02-24~~ 10-08-06

Fig 35. Package outline SOT804-3 (HVQFN64)

© IDT 2012. All rights reserved.

13. Abbreviations

Table 34. Abbreviations

Acronym	Description
ADC	Analog-to-Digital Converter
CMOS	Complementary Metal Oxide Semiconductor
DAV	DAta Valid
DCS	Duty Cycle Stabilizer
DFS	Data Format Select
ESD	ElectroStatic Discharge
IMD	InterModulation Distortion
FS	Full-Scale
LSB	Least Significant Bit
LVCMOS	Low Voltage Complementary Metal Oxide Semiconductor
LVDS DDR	Low Voltage Differential Signalling Double Data Rate
LVPECL	Low-Voltage Positive Emitter-Coupled Logic
MSB	Most Significant Bit
OTR	OuT-of-Range
SFDR	Spurious-Free Dynamic Range
SNR	Signal-to-Noise Ratio
SPI	Serial Peripheral Interface
TX	Transmitter

© IDT 2012. All rights reserved.

14. Revision history

Table 35. Revision history

Document ID	Release date	Data sheet status	Change notice	Supersedes
ADC1412D_SER v.5	20120702	Product data sheet	-	ADC1412D_SER v.4
ADC1412D_SER v.4	20110304	Product data sheet	-	ADC1412D_SER v.3
Modifications:	• Data sheet status changed from Preliminary to Product. • Text and drawings updated throughout entire data sheet. • Section 10.4 “Typical characteristics” has been added to the data sheet. • Section 13 “Abbreviations” has been added to the data sheet.			
ADC1412D_SER v.3	20100806	Preliminary data sheet	-	ADC1412D065_080_105_125 v.2
ADC1412D065_080_105_125 v.2	20090604	Objective data sheet	-	ADC1412D065_080_105_125 v.1
ADC1412D065_080_105_125 v.1	20090528	Objective data sheet	-	-

15. Contact information

For more information or sales office addresses, please visit: http://www.idt.com

© IDT 2012. All rights reserved.

16. Contents

1 General description . . . 1
2 Features and benefits . . . 1
3 Applications . . . 1
4 Ordering information . . . 2
5 Block diagram . . . 2
6 Pinning information . . . 3
6.1 CMOS outputs selected . . . 3
6.1.1 Pinning . . . 3
6.1.2 Pin description . . . 3
6.2 LVDS DDR outputs selected . . . 5
6.2.1 Pinning . . . 5
6.2.2 Pin description . . . 6
7 Limiting values . . . 7
8 Thermal characteristics . . . 7
9 Static characteristics . . . 7
10 Dynamic characteristics . . . 10
10.1 Dynamic characteristics . . . 10
10.2 Clock and digital output timing . . . 11
10.3 SPI timings . . . 14
10.4 Typical characteristics . . . 15
11 Application information . . . 17
11.1 Device control . . . 17
11.1.1 SPI and Pin control modes . . . 17
11.1.2 Operating mode selection . . . 17
11.1.3 Selecting the output data standard . . . 17
11.1.4 Selecting the output data format . . . 18
11.2 Analog inputs . . . 18
11.2.1 Input stage . . . 18
11.2.2 Anti-kickback circuitry . . . 18
11.2.3 Transformer . . . 19
11.3 System reference and power management . . . 20
11.3.1 Internal/external references . . . 20
11.3.2 Programmable full-scale . . . 22
11.3.3 Common-mode output voltage ($V_{O(cm)}$) . . . 22
11.3.4 Biasing . . . 23
11.4 Clock input . . . 23
11.4.1 Drive modes . . . 23
11.4.2 Equivalent input circuit . . . 25
11.4.3 Duty cycle stabilizer . . . 25
11.4.4 Clock input divider . . . 25
11.5 Digital outputs . . . 26
11.5.1 Digital output buffers: CMOS mode . . . 26
11.5.2 Digital output buffers: LVDS DDR mode . . . 27
11.5.3 DAta Valid (DAV) output clock . . . 28
11.5.4 OuT-of-Range (OTR) . . . 28
11.5.5 Digital offset . . . 28
11.5.6 Test patterns . . . 29
11.5.7 Output codes versus input voltage . . . 29
11.6 Serial Peripheral Interface (SPI) . . . 29
11.6.1 Register description . . . 29
11.6.2 Default modes at start-up . . . 30
11.6.3 Register allocation map . . . 32
12 Package outline . . . 38
13 Abbreviations . . . 39
14 Revision history . . . 40
15 Contact information . . . 40
16 Contents . . . 41

© IDT 2012. All rights reserved.