HI7190

24-Bit, High Precision, Sigma Delta A/D Converter

FN3612
Rev 10.00
June 27, 2006

The Intersil HI7190 is a monolithic instrumentation, sigma delta A/D converter which operates from ±5V supplies. Both the signal and reference inputs are fully differential for maximum flexibility and performance. An internal Programmable Gain Instrumentation Amplifier (PGIA) provides input gains from 1 to 128 eliminating the need for external pre-amplifiers. The on-demand converter auto-calibrate function is capable of removing offset and gain errors existing in external and internal circuitry. The on-board user programmable digital filter provides over 120dB of 60/50Hz noise rejection and allows fine tuning of resolution and conversion speed over a wide dynamic range. The HI7190 and HI7191 are functionally the same device, but the HI7190 has tighter linearity specifications.

The HI7190 contains a serial I/O port and is compatible with most synchronous transfer formats including both the Motorola 6805/11 series SPI and Intel 8051 series SSR protocols. A sophisticated set of commands gives the user control over calibration, PGIA gain, device selection, standby mode, and several other features. The On-chip Calibration Registers allow the user to read and write calibration data.

Pinout

HI7190
20 LD SOIC, PDIP
TOP VIEW

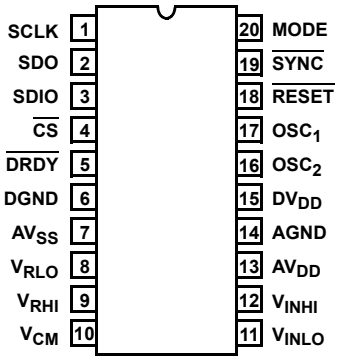

Features

- 22-Bit Resolution with No Missing Code
- 0.0007% Integral Non-Linearity (Typ)
- 20mV to ±2.5V Full Scale Input Ranges
- Internal PGIA with Gains of 1 to 128
- Serial Data I/O Interface, SPI Compatible
- Differential Analog and Reference Inputs
- Internal or System Calibration
- 120dB Rejection of 60/50Hz Line Noise
- Settling Time of 4 Conversions (Max) for a Step Input
- Pb-Free Plus Anneal Available (RoHS Compliant)

Applications

- Process Control and Measurement
- Industrial Weight Scales
- Part Counting Scales
- Laboratory Instrumentation
- Seismic Monitoring
- Magnetic Field Monitoring
- Additional Reference Literature
  - Technical Brief, TB348 “HI7190/1 Negative Full Scale Error vs Conversion Frequency”
  - Application Note, AN9504 “A Brief Intro to Sigma Delta Conversion”
  - Technical Brief, TB329 “Intersil Sigma Delta Calibration Technique”
  - Application Note, AN9505 “Using the HI7190 Evaluation Kit”
  - Technical Brief, TB331 “Using the HI7190 Serial Interface”
  - Application Note, AN9527 “Interfacing HI7190 to a Microcontroller”
  - Application Note, AN9532 “Using HI7190 in a Multiplexed System”
  - Application Note, AN9601 “Using HI7190 with a Single +5V Supply”

Ordering Information

PART NUMBER	PART MARKING	TEMP. RANGE (°C)	PACKAGE	PKG. DWG. #
HI7190IP	HI7190IP	-40 to 85	20 Ld PDIP	E20.3
HI7190IPZ	HI7190IPZ	-40 to 85	20 Ld PDIP* (Pb-free)	E20.3
HI7190IB	HI7190IB	-40 to 85	20 Ld SOIC	M20.3
HI7190IBZ (Note)	HI7190IBZ	-40 to 85	20 Ld SOIC (Pb-free)	M20.3
HI7190IBZ-T (Note)	HI7190IBZ	-40 to 85	20 Ld SOIC Tape and Reel (Pb-free)	M20.3
HI7190EVAL	Evaluation Kit			

*Pb-free PDIPs can be used for through hole wave solder processing only. They are not intended for use in Reflow solder processing applications.

NOTE: Intersil Pb-free plus anneal products employ special Pb-free material sets; molding compounds/die attach materials and 100% matte tin plate termination finish, which are RoHS compliant and compatible with both SnPb and Pb-free soldering operations. Intersil Pb-free products are MSL classified at Pb-free peak reflow temperatures that meet or exceed the Pb-free requirements of IPC/JEDEC J STD-020.

Functional Block Diagram

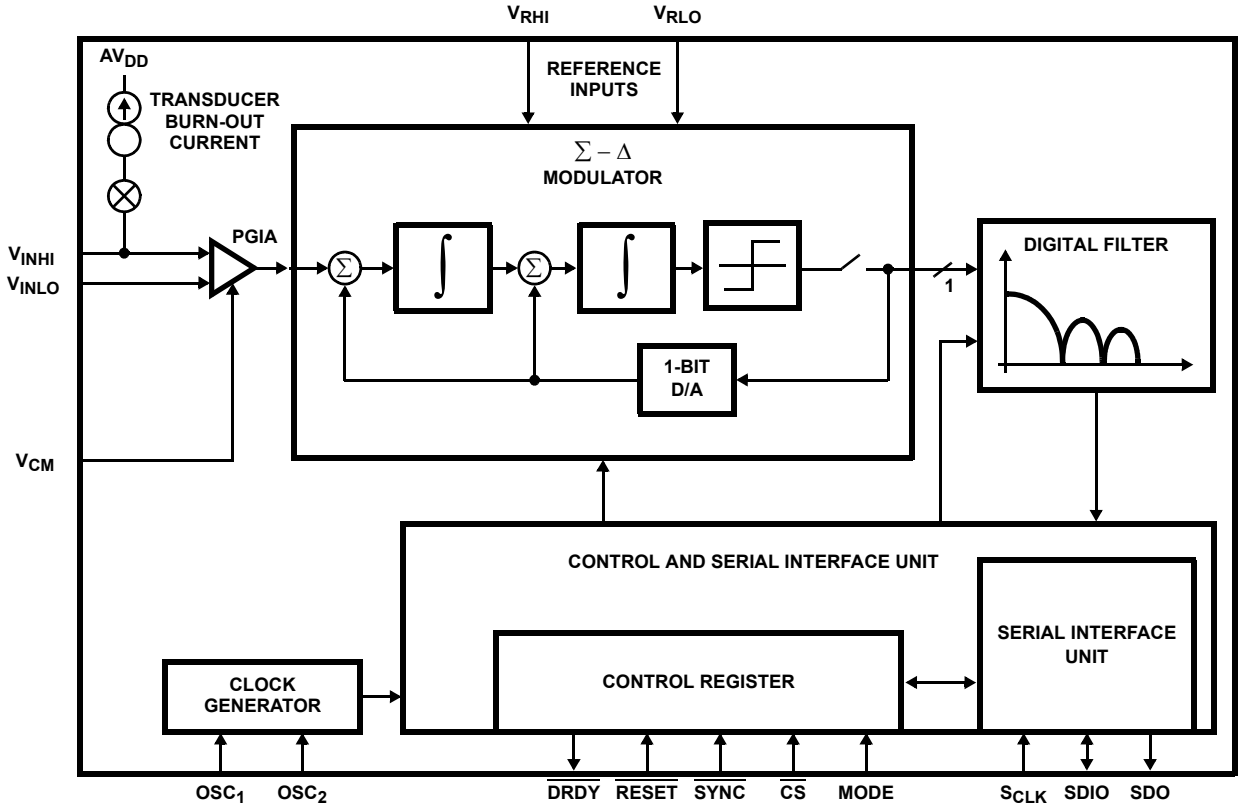

Typical Application Schematic

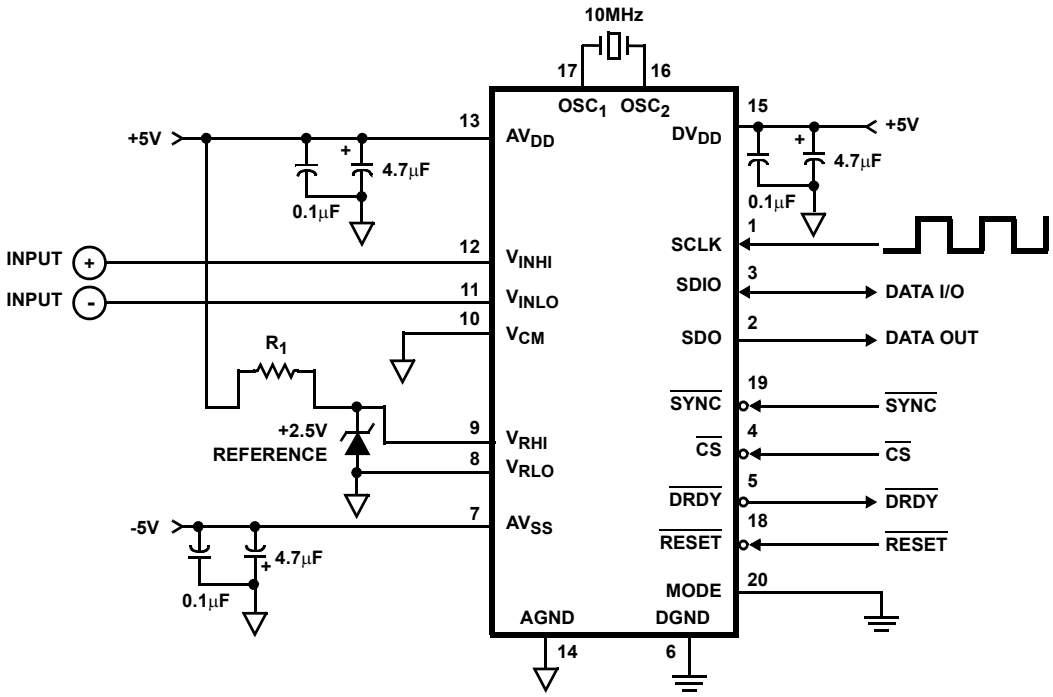

Absolute Maximum Ratings

Supply Voltage
- AV_{DD} to AGND . . . . . +5.5V
- AV_{SS} to AGND . . . . . -5.5V
- DV_{DD} to DGND . . . . . +5.5V
- DGND to AGND . . . . . ±0.3V

Analog Input Pins . . . . . AV_{SS} to AV_{DD}
Digital Input, Output and I/O Pins . . . . . DGND to DV_{DD}
ESD Tolerance (No Damage)
- Human Body Model 500V
- Machine Model 100V
- Charged Device Model 1000V

Thermal Information

Thermal Resistance (Typical, Note 1)	θ_{JA} (°C/W)
PDIP Package	125
SOIC Package	75

Maximum Junction Temperature
- Plastic Packages . . . . . 150°C

Maximum Storage Temperature Range . . . . . -65°C to 150°C
Maximum Lead Temperature (Soldering, 10s) . . . . . 300°C
(SOIC - Lead Tips Only)

Operating Conditions

Temperature Range . . . . . -40° C to 85°C

CAUTION: Stresses above those listed in "Absolute Maximum Ratings" may cause permanent damage to the device. This is a stress only rating and operation of the device at these or any other conditions above those indicated in the operational sections of this specification is not implied.

NOTE:

1. θ_{JA} is measured with the component mounted on a low effective thermal conductivity test board in free air. See Tech Brief TB379 for details.

Electrical Specifications

AV_{DD} = +5V, AV_{SS} = -5V, DV_{DD} = +5V, V_{RHI} = +2.5V, V_{RLO} = AGND = 0V, V_{CM} = AGND, PGIA Gain = 1, OSC_{IN} = 10MHz, Bipolar Input Range Selected, f_N = 10Hz

PARAMETER	TEST CONDITIONS	MIN	TYP	MAX	UNITS
SYSTEM PERFORMANCE					
Integral Non-Linearity, INL	End Point Line Method (Notes 3, 5, 6)	-	±0.0007	±0.0015	%FS
Differential Non-Linearity	(Note 2)	No Missing codes to 22-Bits			LSB
Offset Error, V_{OS}	See Table 1	-	-	-	-
Offset Error Drift	V_{INHI} = V_{INLO} (Notes 3, 8)	-	1	-	µV/°C
Full Scale Error, FSE	V_{INHI} - V_{INLO} = +2.5V (Notes 3, 5, 8, 10)	-	-	-	-
Noise, e_N	See Table 1	-	-	-	-
Common Mode Rejection Ratio, CMRR	V_{CM} = 0V, V_{INHI} = V_{INLO} from -2V to +2V	-	70	-	dB
Normal Mode 50Hz Rejection	Filter Notch = 10Hz, 25Hz, 50Hz (Note 2)	120	-	-	dB
Normal Mode 60Hz Rejection	Filter Notch = 10Hz, 30Hz, 60Hz (Note 2)	120	-	-	dB
Step Response Settling Time		-	2	4	Conversions
ANALOG INPUTS					
Input Voltage Range	Unipolar Mode (Note 9)	0	-	V_{REF}	V
Input Voltage Range	Bipolar Mode (Note 9)	- V_{REF}	-	V_{REF}	V
Common Mode Input Range	(Note 2)	AV_{SS}	-	AV_{DD}	V
Input Leakage Current, I_{IN}	V_{IN} = AV_{DD} (Note 2)	-	-	1.0	nA
Input Capacitance, C_{IN}		-	5.0	-	pF
Reference Voltage Range, V_{REF} (V_{REF} = V_{RHI} - V_{RLO})		2.5	-	5	V
Transducer Burn-Out Current, I_{BO}		-	200	-	nA
CALIBRATION LIMITS					
Positive Full Scale Calibration Limit		-	-	1.2(V_{REF}/Gain)	-
Negative Full Scale Calibration Limit		-	-	1.2(V_{REF}/Gain)	-
Offset Calibration Limit		-	-	1.2(V_{REF}/Gain)	-
Input Span		0.2(V_{REF}/Gain)	-	2.4(V_{REF}/Gain)	-
DIGITAL INPUTS					
Input Logic High Voltage, V_{IH}	(Note 11)	2.0	-	-	V
Input Logic Low Voltage, V_{IL}		-	-	0.8	V
Input Logic Current, I_I	V_{IN} = 0V, +5V	-	1.0	10	µA

Electrical Specifications AV_{DD} = +5V, AV_{SS} = -5V, DV_{DD} = +5V, V_{RHI} = +2.5V, V_{RLO} = AGND = 0V, V_{CM} = AGND, PGIA Gain = 1, OSC_{IN} = 10MHz, Bipolar Input Range Selected, f_N = 10Hz **(Continued)**

PARAMETER	TEST CONDITIONS	MIN	TYP	MAX	UNITS
Input Capacitance, C_{IN}	V_{IN} = 0V	-	5.0	-	pF
DIGITAL OUTPUTS					
Output Logic High Voltage, V_{OH}	I_{OUT} = -100µA (Note 7)	2.4	-	-	V
Output Logic Low Voltage, V_{OL}	I_{OUT} = 3mA (Note 7)	-	-	0.4	V
Output Three-State Leakage Current, I_{OZ}	V_{OUT} = 0V, +5V (Note 7)	-10	1	10	µA
Digital Output Capacitance, C_{OUT}		-	10	-	pF
TIMING CHARACTERISTICS					
SCLK Minimum Cycle Time, t_{SCLK}		200	-	-	ns
SCLK Minimum Pulse Width, t_{SCLKPW}		50	-	-	ns
$\overline{CS}$ to SCLK Precharge Time, t_{PRE}		50	-	-	ns
$\overline{DRDY}$ Minimum High Pulse Width	(Notes 2, 7)	500	-	-	ns
Data Setup to SCLK Rising Edge (Write), t_{DSU}		50	-	-	ns
Data Hold from SCLK Rising Edge (Write), t_{DHLD}		0	-	-	ns
Data Read Access from Instruction Byte Write, t_{ACC}	(Note 7)	-	-	40	ns
Read Bit Valid from SCLK Falling Edge, t_{DV}	(Note 7)	-	-	40	ns
Last Data Transfer to Data Ready Inactive, $t_{\overline{DRDY}}$	(Note 7)	-	35	-	ns
$\overline{RESET}$ Low Pulse Width	(Note 2)	100	-	-	ns
$\overline{SYNC}$ Low Pulse Width	(Note 2)	100	-	-	ns
Oscillator Clock Frequency	(Note 2)	0.1	-	10	MHz
Output Rise/Fall Time	(Note 2)	-	-	30	ns
Input Rise/Fall Time	(Note 2)	-	-	1	µs
POWER SUPPLY CHARACTERISTICS					
IAV_{DD}		-	-	1.5	mA
IAV_{SS}		-	-	2.0	mA
IDV_{DD}	SCLK = 4MHz	-	-	3.0	mA
Power Dissipation, Active PD_A	SB = ‘0’	-	15	32.5	mW
Power Dissipation, Standby PD_S	SB = ‘1’	-	5	-	mW
PSRR	(Note 3)	-	-70	-	dB

NOTES:

2. Parameter guaranteed by design or characterization, not production tested.
3. Applies to both bipolar and unipolar input ranges.
4. These errors can be removed by re-calibrating at the desired operating temperature.
5. Applies after system calibration.
6. Fully differential input signal source is used.
7. See Load Test Circuit, Figure 4, R1 = 10kΩ, C_L = 50pF.
8. 1 LSB = 298nV at 24 bits for a Full Scale Range of 5V.
9. $V_{REF} = V_{RHI} - V_{RLO}$.
10. These errors are on the order of the output noise shown in Table 1.
11. All inputs except OSC_1. The OSC_1 input V_{IH} is 3.5V minimum.

Timing Diagrams

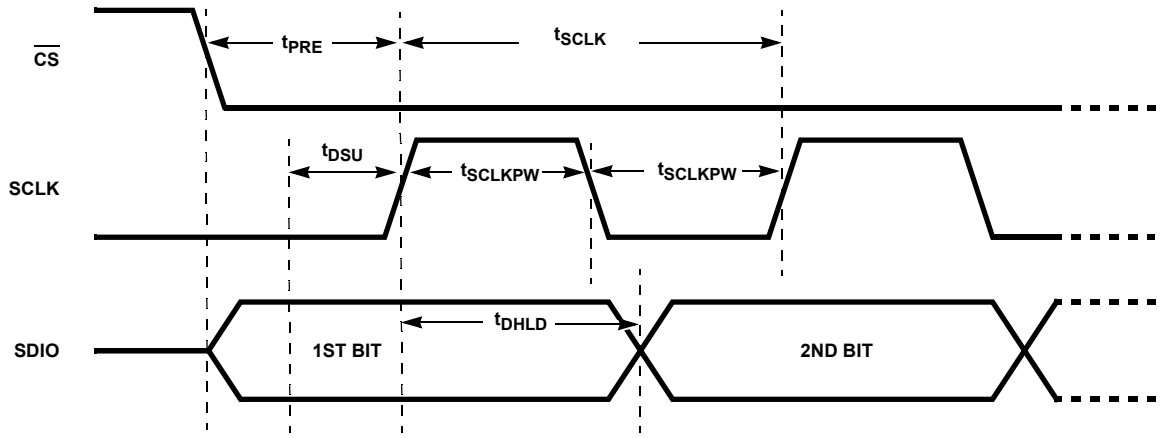

FIGURE 1. DATA WRITE TO HI7190

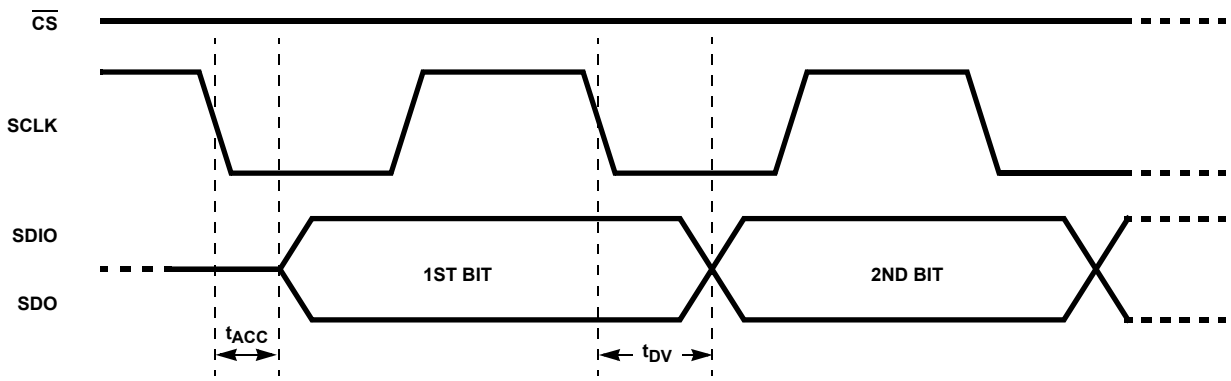

FIGURE 2. DATA READ FROM HI7190

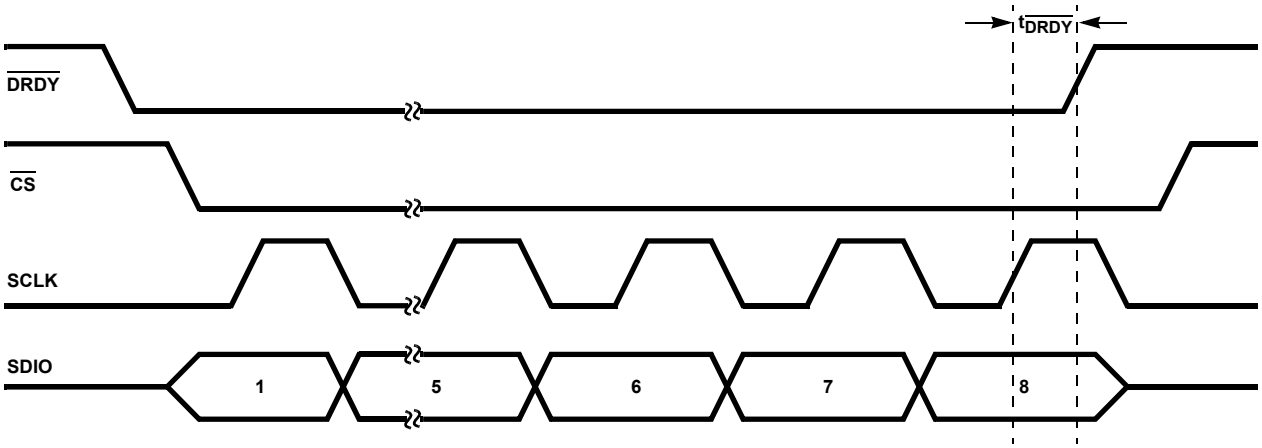

FIGURE 3. DATA READ FROM HI7190

Pin Descriptions

20 LEAD DIP, SOIC	PIN NAME	DESCRIPTION
1	SCLK	Serial Interface Clock. Synchronizes serial data transfers. Data is input on the rising edge and output on the falling edge.
2	SDO	Serial Data OUT. Serial data is read from this line when using a 3-wire serial protocol such as the Motorola Serial Peripheral Interface.
3	SDIO	Serial Data IN or OUT. This line is bidirectional programmable and interfaces directly to the Intel Standard Serial Interface using a 2-wire serial protocol.
4	$\overline{CS}$	Chip Select Input. Used to select the HI7190 for a serial data transfer cycle. This line can be tied to DGND.
5	$\overline{DRDY}$	An Active Low Interrupt indicating that a new data word is available for reading.
6	DGND	Digital Supply Ground.
7	AV_{SS}	Negative Analog Power Supply (-5V).
8	V_{RLO}	External Reference Input. Should be negative referenced to V_{RHI}.
9	V_{RHI}	External Reference Input. Should be positive referenced to V_{RLO}.
10	V_{CM}	Common Mode Input. Should be set to halfway between AV_{DD} and AV_{SS}.
11	V_{INLO}	Analog Input LO. Negative input of the PGIA.
12	V_{INHI}	Analog Input HI. Positive input of the PGIA. The V_{INHI} input is connected to a current source that can be used to check the condition of an external transducer. This current source is controlled via the Control Register.
13	AV_{DD}	Positive Analog Power Supply (+5V).
14	AGND	Analog Supply Ground.
15	DV_{DD}	Positive Digital Supply (+5V).
16	OSC_2	Used to connect a crystal source between OSC_1 and OSC_2. Leave open otherwise.
17	OSC_1	Oscillator Clock Input for the device. A crystal connected between OSC_1 and OSC_2 will provide a clock to the device, or an external oscillator can drive OSC_1. The oscillator frequency should be 10MHz (Typ).
18	$\overline{RESET}$	Active Low Reset Pin. Used to initialize the HI7190 registers, filter and state machines.
19	$\overline{SYNC}$	Active Low Sync Input. Used to control the synchronization of a number of HI7190s. A logic ‘0’ initializes the converter.
20	MODE	Mode Pin. Used to select between Synchronous Self Clocking (Mode = 1) or Synchronous External Clocking (Mode = 0) for the Serial Port.

Load Test Circuit

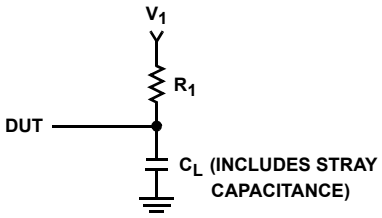

FIGURE 4.

ESD Test Circuits

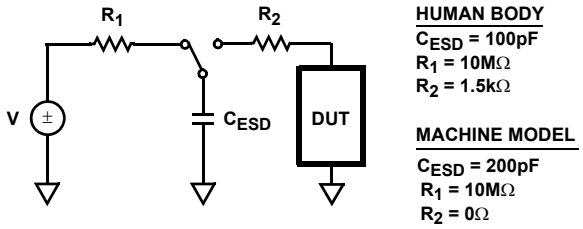

FIGURE 5A.

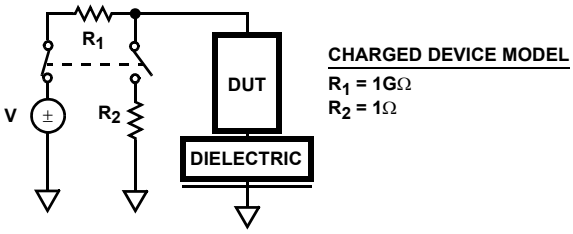

FIGURE 5B.

TABLE 1. NOISE PERFORMANCE WITH INPUTS CONNECTED TO ANALOG GROUND

HERTZ	SNR	ENOB	P-P NOISE (μV)	RMS NOISE (μV)
GAIN = 1				
10	132.3	21.7	9.8	1.5
25	129.5	21.2	13.6	2.1
30	127.7	20.9	16.6	2.5
50	126.3	20.7	19.5	3.0
60	125.6	20.6	21.2	3.2
100	122.4	20.0	30.7	4.6
250	107.7	17.6	166.7	25.3
500	98.1	16.0	505.3	76.6
1000	85.7	13.9	2101.8	318.5
2000	68.8	11.1	14661.6	2221.4
GAIN = 2				
10	129.2	21.2	14.0	2.1
25	125.7	20.6	20.9	3.2
30	124.5	20.4	24.1	3.7
50	123.4	20.2	27.3	4.1
60	122.5	20.1	30.3	4.6
100	118.1	19.3	50.0	7.6
250	106.1	17.3	199.5	30.2
500	96.9	15.8	580.1	87.9
1000	84.4	13.7	2435.6	369.0
2000	67.8	11.0	16469.7	2495.4
GAIN = 4				
10	125.9	20.6	20.5	3.1
25	123.1	20.1	28.4	4.3
30	121.8	19.9	32.8	5.0
50	119.9	19.6	40.9	6.2
60	119.9	19.6	40.9	6.2
100	116.1	19.0	63.2	9.6
250	105.7	17.3	209.7	31.8
500	96.6	15.8	597.8	90.6
1000	84.3	13.7	2469.5	374.2
2000	68.2	11.0	15656.1	2372.1
GAIN = 8				
10	124.7	20.4	23.4	3.5
25	120.6	19.7	37.8	5.7
30	119.2	19.5	44.3	6.7
50	117.5	19.2	53.8	8.2
60	116.8	19.1	58.6	8.9
100	112.1	18.3	100.0	15.2
250	101.4	16.5	345.2	52.3
500	95.3	15.5	691.1	104.7
1000	83.1	13.5	2838.6	430.1
2000	68.3	11.1	15494.7	2347.7

HERTZ	SNR	ENOB	P-P NOISE (μV)	RMS NOISE (μV)
GAIN = 16				
10	120.1	19.7	39.8	6.0
25	114.8	18.8	73.4	11.1
30	113.5	18.6	85.1	12.9
50	111.0	18.1	114.4	17.3
60	109.6	17.9	134.0	20.3
100	105.5	17.2	214.8	32.5
250	95.2	15.5	699.1	105.9
500	89.1	14.5	1417.7	214.8
1000	83.5	13.6	2686.0	407.0
2000	62.6	10.1	30110.0	4562.1
GAIN = 32				
10	113.2	18.5	88.8	13.5
25	109.0	17.8	142.7	21.6
30	108.2	17.7	157.4	23.8
50	104.7	17.1	235.8	35.7
60	105.0	17.1	227.8	34.5
100	102.3	16.7	310.5	47.0
250	93.4	15.2	861.1	130.5
500	87.1	14.2	1782.7	270.1
1000	78.2	12.7	4990.4	756.1
2000	57.0	9.2	57311.1	8683.5
GAIN = 64				
10	106.7	17.4	186.2	28.2
25	102.9	16.8	288.4	43.7
30	101.9	16.6	325.8	49.4
50	98.5	16.1	479.8	72.7
60	98.9	16.1	459.8	69.7
100	96.3	15.7	620.2	94.0
250	85.5	13.9	2133.5	323.3
500	78.1	12.7	5025.0	761.4
1000	66.7	10.8	18693.5	2832.3
2000	50.5	8.1	120163.0	18206.5
GAIN = 128				
10	101.1	16.5	356.5	54.0
25	96.0	15.7	638.3	96.7
30	95.2	15.5	704.8	106.8
50	93.2	15.2	882.2	133.7
60	92.2	15.0	996.7	151.0
100	91.4	14.9	1086.6	164.6
250	79.4	12.9	4346.4	658.5
500	71.8	11.6	10439.2	1581.7
1000	60.1	9.7	39923.0	6048.9
2000	44.8	7.1	233238.2	35339.1

Definitions

Integral Non-Linearity, INL, is the maximum deviation of any digital code from a straight line passing through the endpoints of the transfer function. The endpoints of the transfer function are zero scale (a point 0.5 LSB below the first code transition 000...000 and 000...001) and full scale (a point 0.5 LSB above the last code transition 111...110 to 111...111).

Differential Non-Linearity, DNL, is the deviation from the actual difference between midpoints and the ideal difference between midpoints (1 LSB) for adjacent codes. If this difference is equal to or more negative than 1 LSB, a code will be missed.

Offset Error, V_{OS}, is the deviation of the first code transition from the ideal input voltage (V_{IN} - 0.5 LSB). This error can be calibrated to the order of the noise level shown in Table 1.

Full Scale Error, FSE, is the deviation of the last code transition from the ideal input full scale voltage (V_{IN}- + V_{REF}/Gain - 1.5 LSB). This error can be calibrated to the order of the noise level shown in Table 1.

Input Span, defines the minimum and maximum input voltages the device can handle while still calibrating properly for gain.

Noise, e_N, Table 1 shows the peak-to-peak and RMS noise for typical notch and -3dB frequencies. The device programming was for bipolar input with a V_{REF} of +2.5V. This implies the input range is 5V. The analysis was performed on 100 conversions with the peak-to-peak output noise being the difference between the maximum and minimum readings over a rolling 10 conversion window. The equation to convert the peak-to-peak noise data to ENOB is:

$$ENOB = Log_2 (V_{FS}/V_{NRMS})$$

where: V_{FS} = 5V, $V_{NRMS} = V_{NP-P}/CF$ and

CF = 6.6 (Empirical Crest Factor)

The noise from the part comes from two sources, the quantization noise from the analog-to-digital conversion process and device noise. Device noise (or Wideband Noise) is independent of gain and essentially flat across the frequency spectrum. Quantization noise is ratiometric to input full scale (and hence gain) and its frequency response is shaped by the modulator.

Looking at Table 1, as the cutoff frequency increases the output noise increases. This is due to more of the quantization noise of the part coming through to the output and, hence, the output noise increases with increasing -3dB frequencies. For the lower notch settings, the output noise is dominated by the device noise and, hence, altering the gain has little effect on the output noise. At higher notch frequencies, the quantization noise dominates the output noise and, in this case, the output noise tends to decrease with increasing gain.

Since the output noise comes from two sources, the effective resolution of the device (i.e., the ratio of the input full scale to the output RMS noise) does not remain constant with increasing gain or with increasing bandwidth. It is possible to do post-filtering (such as brick wall filtering) on the data to improve the overall resolution for a given -3dB frequency and also to further reduce the output noise.

Circuit Description

The HI7190 is a monolithic, sigma delta A/D converter which operates from ±5V supplies and is intended for measurement of wide dynamic range, low frequency signals. It contains a Programmable Gain Instrumentation Amplifier (PGIA), sigma delta ADC, digital filter, bidirectional serial port (compatible with many industry standard protocols), clock oscillator, and an on-chip controller.

The signal and reference inputs are fully differential for maximum flexibility and performance. Normally V_{RHI} and V_{RLO} are tied to +2.5V and AGND respectively. This allows for input ranges of 2.5V and 5V when operating in the unipolar and bipolar modes respectively (assuming the PGIA is configured for a gain of 1). The internal PGIA provides input gains from 1 to 128 and eliminates the need for external pre-amplifiers. This means the device will convert signals ranging from 0V to +20mV and 0V to +2.5V when operating in the unipolar mode or signals in the range of ±20mV to ±2.5V when operating in the bipolar mode.

The input signal is continuously sampled at the input to the HI7190 at a clock rate set by the oscillator frequency and the selected gain. This signal then passes through the sigma delta modulator (which includes the PGIA) and emerges as a pulse train whose code density contains the analog signal information. The output of the modulator is fed into the $sinc^3$ digital low pass filter. The filter output passes into the calibration block where offset and gain errors are removed. The calibrated data is then coded (2's complement, offset binary or binary) before being stored in the Data Output Register. The Data Output Register update rate is determined by the first notch frequency of the digital filter. This first notch frequency is programmed into HI7190 via the Control Register and has a range of 10Hz to 1.953kHz which corresponds to -3dB frequencies of 2.62Hz and 512Hz respectively.

Output data coding on the HI7190 is programmable via the Control Register. When operating in bipolar mode, data output can be either 2's complement or offset binary. In unipolar mode output is binary.

The $\overline{DRDY}$ signal is used to alert the user that new output data is available. Converted data is read via the HI7190 serial I/O port which is compatible with most synchronous transfer formats including both the Motorola 6805/11 series

SPI and Intel 8051 series SSR protocols. Data Integrity is always maintained at the HI7190 output port. This means that if a data read of conversion N is begun but not finished before the next conversion (conversion N + 1) is complete, the $\overline{DRDY}$ line remains active (low) and the data being read is not overwritten.

The HI7190 provides many calibration modes that can be initiated at any time by writing to the Control Register. The device can perform system calibration where external components are included with the HI7190 in the calibration loop or self-calibration where only the HI7190 itself is in the calibration loop. The On-chip Calibration Registers are read/write registers which allow the user to read calibration coefficients as well as write previously determined calibration coefficients.

Circuit Operation

The analog and digital supplies and grounds are separate on the HI7190 to minimize digital noise coupling into the analog circuitry. Nominal supply voltages are AV_{DD} = +5V, DV_{DD} = +5V, and AV_{SS} = -5V. If the same supply is used for AV_{DD} and DV_{DD} it is imperative that the supply is separately decoupled to the AV_{DD} and DV_{DD} pins on the HI7190. Separate analog and digital ground planes should be maintained on the system board and the grounds should be tied together back at the power supply.

When the HI7190 is powered up it needs to be reset by pulling the $\overline{RESET}$ line low. The reset sets the internal registers of the HI7190 as shown in Table 2 and puts the part in the bipolar mode with a gain of 1 and offset binary coding. The filter notch of the digital filter is set at 30Hz while the I/O is set up for bidirectional I/O (data is read and written on the SDIO line and SDO is three-stated), descending byte order, and MSB first data format. A self calibration is performed before the device begins converting. $\overline{DRDY}$ goes low when valid data is available at the output.

TABLE 2. REGISTER RESET VALUES

REGISTER	VALUE (HEX)
Data Output Register	XXXX (Undefined)
Control Register	28B300
Offset Calibration Register	Self Calibration Value
Positive Full Scale Calibration Register	Self Calibration Value
Negative Full Scale Calibration Register	Self Calibration Value

The configuration of the HI7190 is changed by writing new setup data to the Control Register. Whenever data is written to byte 2 and/or byte 1 of the Control Register the part assumes that a critical setup parameter is being changed which means that $\overline{DRDY}$ goes high and the device is re-synchronized. If the configuration is changed such that the device is in any one of the calibration modes, a new calibration is performed before normal conversions continue.

If the device is written to the conversion mode, a new calibration is NOT performed (A new calibration is recommended any time data is written to the Control Register.). In either case, $\overline{DRDY}$ goes low when valid data is available at the output.

If a single data byte is written to byte 0 of the Control Register, the device assumes the gain has NOT been changed. It is up to the user to re-calibrate the device if the gain is changed in this manner. For this reason it is recommended that the entire Control Register be written when changing the gain of the device. This ensures that the part is re-calibrated (if in a calibration mode) before the $\overline{DRDY}$ output goes low indicating that valid data is available.

The calibration registers can be read via the serial interface at any time. However, care must be taken when writing data to the calibration registers. If the HI7190 is internally updating any calibration register the user can not write to that calibration register. See the Operational Modes section for details on which calibration registers are updated for the various modes.

Since access to the calibration registers is asynchronous to the conversion process the user is cautioned that new calibration data may not be used on the very next set of “valid” data after a calibration register write. It is guaranteed that the new data will take effect on the second set of output data. Non-calibrated data can be obtained from the device by writing 000000 (h) to the Offset Calibration Register, 800000 (h) to the Positive Full Scale Calibration Register, and 800000 (h) to the Negative Full Scale Calibration Register. This sets the offset correction factor to 0 and the positive and negative gain slope factors to 1.

If several HI7190s share a system master clock the $\overline{SYNC}$ pin can be used to synchronize their operation. A common $\overline{SYNC}$ input to multiple devices will synchronize operation such that all output registers are updated simultaneously. Of course the $\overline{SYNC}$ pin would normally be activated only after each HI7190 has been calibrated or has had calibration coefficients written to it.

The $\overline{SYNC}$ pin can also be used to control the HI7190 when an external multiplexer is used with a single HI7190. The $\overline{SYNC}$ pin in this application can be used to guarantee a maximum settling time of 3 conversion periods when switching channels on the multiplexer.

Analog Section Description

Figure 6 shows a simplified block diagram of the analog modulator front end of a sigma delta A/D Converter. The input signal V_{IN} comes into a summing junction (the PGIA in this case) where the previous modulator output is subtracted from it. The resulting signal is then integrated and the output of the integrator goes into the comparator. The output of the comparator is then fed back via a 1-bit DAC to the summing

junction. The feedback loop forces the average of the fed back signal to be equal to the input signal V_{IN}.

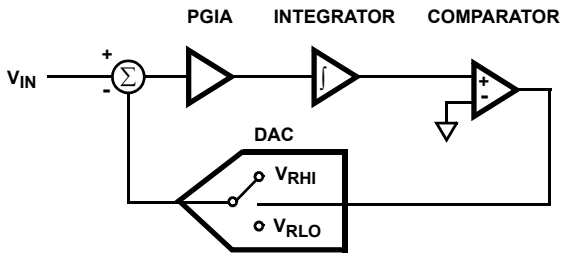

FIGURE 6. SIMPLE MODULATOR BLOCK DIAGRAM

Analog Inputs

The analog input on the HI7190 is a fully differential input with programmable gain capabilities. The input accepts both unipolar and bipolar input signals and gains range from 1 to 128. The common mode range of this input is from AV_{SS} to AV_{DD} provided that the absolute value of the analog input voltage lies within the power supplies. The input impedance of the HI7190 is dependent upon the modulator input sampling rate and the sampling rate varies with the selected PGIA gain. Table 3 shows the sampling rates and input impedances for the different gain settings of the HI7190. Note that this table is valid only for a 10MHz master clock. If the input clock frequency is changed, then the input impedance will change accordingly. The equation used to calculate the input impedance is:

$Z_{IN} = 1/(C_{IN} \times f_S)$,

where C_{in} is the nominal input capacitance (8pF) and f_S is the modulator sampling rate.

TABLE 3. EFFECTIVE INPUT IMPEDANCE vs GAIN

GAIN	SAMPLING RATE (kHz)	INPUT IMPEDANCE (MΩ)
1	78.125	1.6
2	156.25	0.8
4	312.5	0.4
8, 16, 32, 64, 128	625	0.2

Bipolar/Unipolar Input Ranges

The input on the HI7190 can accept either unipolar or bipolar input voltages. Bipolar or unipolar options are chosen by programming the B/$\overline{U}$ bit of the Control Register. Programming the part for either unipolar or bipolar operation does not change the input signal conditioning.

The inputs are differential, and as a result are referenced to the voltage on the V_{INLO} input. For example, if V_{INLO} is +1.25V and the HI7190 is configured for unipolar operation with a gain of 1 and a V_{REF} of +2.5V, the input voltage range on the V_{INHI} input is +1.25V to +3.75V. If V_{INLO} is +1.25V and the HI7190 is configured for bipolar mode with gain of 1 and a V_{REF} of +2.5V, the analog input range on the V_{INHI} input is -1.25V to +3.75V.

Programmable Gain Instrumentation Amplifier

The Programmable Gain Instrumentation Amplifier allows the user to directly interface low level sensors and bridges directly to the HI7190. The PGIA has 4 selectable gain options of 1, 2, 4, 8 which are implemented by multiple sampling of the input signal. Input signals can be gained up further to 16, 32, 64 or 128. These higher gains are implemented in the digital section of the design to maintain a high signal to noise ratio through the front end amplifiers. The gain is digitally programmable in the Control Register via the serial interface. For optimum PGIA performance the V_{CM} pin should be tied to the mid point of the analog supplies.

Differential Reference Input

The reference inputs of the of the HI7190, V_{RHI} and V_{RLO}, provide a differential reference input capability. The nominal differential voltage ($V_{REF} = V_{RHI} - V_{RLO}$) is +2.5V and the common mode voltage cab be anywhere between AV_{SS} and AV_{DD}. Larger values of V_{REF} can be used without degradation in performance with the maximum reference voltage being V_{REF} = +5V. Smaller values of V_{REF} can also be used but performance will be degraded since the LSB size is reduced.

The full scale range of the HI7190 is defined as:

$FSR_{BIPOLAR} = 2 \times V_{REF}/GAIN$

$FSR_{UNIPOLAR} = V_{REF}/GAIN$

and V_{RHI} must always be greater than V_{RLO} for proper operation of the device.

The reference inputs provide a high impedance dynamic load similar to the analog inputs and the effective input impedance for the reference inputs can be calculated in the same manner as it is for the analog input impedance. The only difference in the calculation is that C_{IN} for the reference inputs is 10.67pF. Therefore, the input impedance range for the reference inputs is from 149kΩ in a gain of 8 or higher mode to 833kΩ in the gain of 1 mode.

V_{CM} Input

The voltage at the V_{CM} input is the voltage that the internal analog circuitry is referenced to and should always be tied to the midpoint of the AV_{DD} and AV_{SS} supplies. This point provides a common mode input voltage for the internal operational amplifiers and must be driven from a low noise, low impedance source if it is not tied to analog ground. Failure to do so will result in degraded HI7190 performance. It is recommended that V_{CM} be tied to analog ground when operating off of AV_{DD} = +5V and AV_{SS} = -5V supplies.

V_{CM} also determines the headroom at the upper and lower ends of the power supplies which is limited by the common mode input range where the internal operational amplifiers remain in the linear, high gain region of operation. The HI7190 is designed to have a range of AV_{SS} +1.8V < V_{CM} <

AV_{DD} - 1.8V. Exceeding this range on the V_{CM} pin will compromise the device performance.

Transducer Burn-Out Current Source

The V_{INHI} input of the HI7190 contains a 500nA (Typ) current source which can be turned on/off via the Control Register. This current source can be used in checking whether a transducer has burnt-out or become open before attempting to take measurements on that channel. When the current source is turned on an additional offset will be created indicating the presence of a transducer. The current source is controlled by the BO bit (Bit 4) in the Control Register and is disabled on power up. See Figure 7 for an applications circuit.

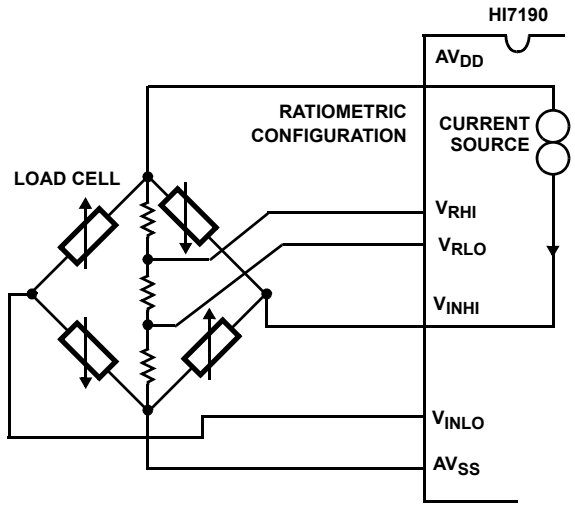

FIGURE 7. BURN-OUT CURRENT SOURCE CIRCUIT

Digital Section Description

A block diagram of the digital section of the HI7190 is shown in Figure 8. This section includes a low pass decimation filter, conversion controller, calibration logic, serial interface, and clock generator.

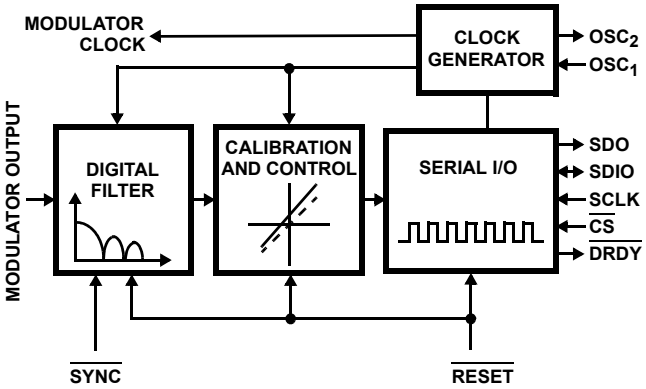

FIGURE 8. DIGITAL SECTION BLOCK DIAGRAM

Digital Filtering

One advantage of digital filtering is that it occurs after the conversion process and can remove noise introduced during the conversion. It can not, however, remove noise present on the analog signal prior to the ADC (which an analog filter can).

One problem with the modulator/digital filter combination is that excursions outside the full scale range of the device could cause the modulator and digital filter to saturate. This device has headroom built in to the modulator and digital filter which tolerates signal deviations up to 33% outside of the full scale range of the device. If noise spikes can drive the input signal outside of this extended range, it is recommended that an input analog filter is used or the overall input signal level is reduced.

Low Pass Decimation Filter

The digital low-pass filter is a Hogenauer ($sinc^3$) decimating filter. This filter was chosen because it is a cost effective low pass decimating filter that minimizes the need for internal multipliers and extensive storage and is most effective when used with high sampling or oversampling rates. Figure 9 shows the frequency characteristics of the filter where f_C is the -3dB frequency of the input signal and f_N is the programmed notch frequency. The analog modulator sends a one bit data stream to the filter at a rate of that is determined by:

$f_{MODULATOR} = f_{OSC}/128$

$f_{MODULATOR}$ = 78.125kHz for f_{OSC} = 10MHz.

The filter then converts the serial modulator data into 40-bit words for processing by the Hogenauer filter. The data is decimated in the filter at a rate determined by the CODE word FP10-FP0 (programed by the user into the Control Register) and the external clock rate. The equation is:

$f_{NOTCH} = f_{OSC}/(512 \times CODE)$.

The Control Register has 11 bits that select the filter cutoff frequency and the first notch of the filter. The output data update rate is equal to the notch frequency. The notch frequency sets the Nyquist sampling rate of the device while the -3dB point of the filter determines the frequency spectrum of interest (f_S). The FP bits have a usable range of 10 through 2047 where 10 yields a 1.953kHz Nyquist rate.

The Hogenauer filter contains alias components that reflect around the notch frequency. If the spectrum of the frequency of interest reaches the alias component, the data has been aliased and therefore undersampled.

Filter Characteristics

Please note: We have recently discovered a performance anomaly with the HI7190. The problem occurs when the digital code for the notch filter is programmed within certain frequencies. We believe the error is caused by the calibration logic and the digital notch code NOT the absolute frequency. The error is seen when the user applies mid-scale (0V input, Bipolar mode). With this input, the expected digital output

should be mid-scale (800000_h). Instead, there is a small probability, of an erroneous negative full scale (000000_h) output. Refer to Technical Brief TB348 for complete details.

The FP10 to FP0 bits programmed into the Control Register determine the cutoff (or notch) frequency of the digital filter. The allowable code range is $00A_H$. This corresponds to a maximum and minimum cutoff frequency of 1.953kHz and 10Hz, respectively when operating at a clock frequency of 10MHz. If a 1MHz clock is used then the maximum and minimum cutoff frequencies become 195.3kHz and 1Hz, respectively. A plot of the $(\sin x/x)^3$ digital filter characteristics is shown in Figure 9. This filter provides greater than 120dB of 50Hz or 60Hz rejection. Changing the clock frequency or the programming of the FP bits does not change the shape of the filter characteristics, it merely shifts the notch frequency. This low pass digital filter at the output of the converter has an accompanying settling time for step inputs just as a low pass analog filter does. New data takes between 3 and 4 conversion periods to settle and update on the serial port with a conversion period t_{CONV} being equal to $1/f_N$.

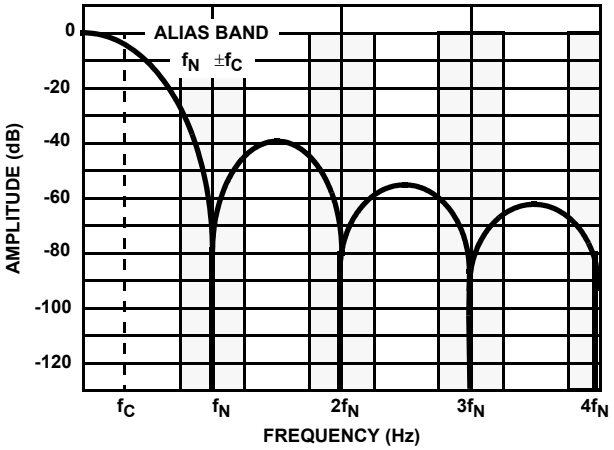

FIGURE 9. LOW PASS FILTER FREQUENCY CHARACTERISTICS

Input Filtering

The digital filter does not provide rejection at integer multiples of the modulator sampling frequency. This implies that there are frequency bands where noise passes to the output without attenuation. For most cases this is not a problem because the high oversampling rate and noise shaping characteristics of the modulator cause this noise to become a small portion of the broadband noise which is filtered. However, if an anti-alias filter is necessary a single pole RC filter is usually sufficient.

If an input filter is used the user must be careful that the source impedance of the filter is low enough not to cause gain errors in the system. The DC input impedance at the inputs is > 1GΩ but it is a dynamic load that changes with clock frequency and selected gain. The input sample rate, also dependent upon clock frequency and gain, determines the allotted time for the input capacitor to charge. The addition of external components may cause the charge time of the capacitor to increase beyond the allotted time. The result of the input not settling to the proper value is a system gain error which can be eliminated by system calibration of the HI7190.

Clocking/Oscillators

The master clock into the HI7190 can be supplied by either a crystal connected between the OSC_1 and OSC_2 pins as shown in Figure 10A or a CMOS compatible clock signal connected to the OSC_1 pin as shown in Figure 10B. The input sampling frequency, modulator sampling frequency, filter -3dB frequency, output update rate, and calibration time are all directly related to the master clock frequency, f_{OSC}. For example, if a 1MHz clock is used instead of a 10MHz clock, what is normally a 10Hz conversion rate becomes a 1Hz conversion rate. Lowering the clock frequency will also lower the amount of current drawn from the power supplies. Please note that the HI7190 specifications are written for a 10MHz clock only.

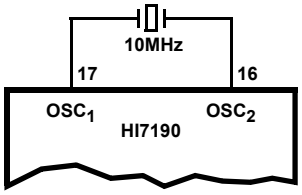

FIGURE 10A.

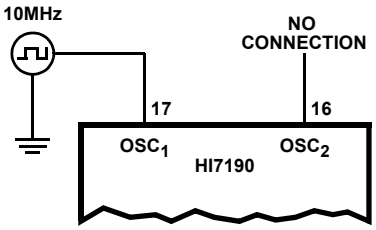

FIGURE 10B.

FIGURE 10. OSCILLATOR CONFIGURATIONS

Operational Modes

The HI7190 contains several operational modes including calibration modes for cancelling offset and gain errors of both internal and external circuitry. A calibration routine should be initiated whenever there is a change in the ambient operating temperature or supply voltage. Calibration should also be initiated if there is a change in the gain, filter notch, bipolar, or unipolar input range. Non-calibrated data can be obtained from the device by writing 000000 to the Offset Calibration Register, 800000 (h) to the Positive Full Scale Calibration Register, and 800000 (h) to the Negative Full Scale Calibration Register. This sets the offset correction factor to 0 and both the positive and negative gain slope factors to 1.

The HI7190 offers several different modes of Self-Calibration and System Calibration. For calibration to occur, the on-chip microcontroller must convert the modulator output for three different input conditions - “zero-scale,” “positive full scale,” and “negative full scale”. With these readings, the HI7190 can null any offset errors and calculate the gain slope factor for the transfer function of the converter. It is imperative that the zero-scale calibration be performed before either of the gain calibrations. However, the order of the gain calibrations is not important.

The calibration modes are user selectable in the Control Register by using the MD bits (MD2-MD0) as shown in Table 4. $\overline{\text{DRDY}}$ will go low indicating that the calibration is complete **and** there is valid data at the output.

TABLE 4. HI7190 OPERATIONAL MODES

MD2	MD1	MD0	OPERATIONAL MODE
0	0	0	Conversion
0	0	1	Self Calibration (Gain of 1 only)
0	1	0	System Offset Calibration
0	1	1	System Positive Full Scale Calibration
1	0	0	System Negative Full Scale Calibration
1	0	1	System Offset/Internal Gain Calibration (Gain of 1 only)
1	1	0	System Gain Calibration
1	1	1	Reserved

Conversion Mode

For Conversion Mode operation the HI7190 converts the differential voltage between V_{INHI} and V_{INLO}. From switching into this mode it takes 3 conversion periods (3 x $1/f_N$) for $\overline{\text{DRDY}}$ to go low and new data to be valid. No calibration coefficients are generated when operating in Conversion Mode as data is calibrated using the existing calibration coefficients.

Self-Calibration Mode

Please note: Self-calibration is only valid when operating in a gain of one. In addition, the offset and gain errors are not reduced as with the full system calibration.

The Self-Calibration Mode is a three step process that updates the Offset Calibration Register, the Positive Full Scale Calibration Register, and the Negative Full Scale Calibration Register. In this mode an internal offset calibration is done by disconnecting the external inputs and shorting the inputs of the PGIA together. After 3 conversion periods the Offset Calibration Register is updated with the value that corrects any internal offset errors.

After the offset calibration is completed, the Positive and Negative Full Scale Calibration Registers are updated. The inputs V_{INHI} and V_{INLO} are disconnected and the external reference is applied across the modulator inputs. The HI7190 then takes 3 conversion cycles to sample the data and update the Positive Full Scale Calibration Register. Next the polarity of the reference voltage across the modulator input terminals is reversed and after 3 conversion cycles the Negative Full Scale Calibration Register is updated. The values stored in the Positive and Negative Full Scale Calibration Registers correct for any internal gain errors in the A/D transfer function. After 3 more conversion cycles the $\overline{\text{DRDY}}$ line will activate signaling that the calibration is complete and valid data is present in the Data Output Register.

System Offset Calibration Mode

The System Offset Calibration Mode is a single step process that allows the user to lump offset errors of external circuitry and the internal errors of the HI7190 together and null them out. This mode will convert the external differential signal applied to the V_{IN} inputs and then store that value in the Offset Calibration Register. *The user must apply the zero point or offset voltage to the HI7190 analog inputs and allow the signal to settle **before** selecting this mode.* After 4 conversion periods the $\overline{\text{DRDY}}$ line will activate signaling that the calibration is complete and valid data is present in the Data Output Register.

System Positive Full Scale Calibration Mode

The System Positive Full Scale Calibration Mode is a single step process that allows the user to lump gain errors of external circuitry and the internal errors of the HI7190 together and null them out. This mode will convert the external differential signal applied to the V_{IN} inputs and stores the converted value in the Positive Full Scale Calibration Register. *The user must apply the +Full Scale voltage to the HI7190 analog inputs and allow the signal to settle **before** selecting this mode.* After 4 conversion periods the $\overline{\text{DRDY}}$ line will activate signaling the calibration is complete and valid data is present in the Data Output Register.

System Negative Full Scale Calibration Mode

The System Negative Full Scale Calibration Mode is a single-step process that allows the user to lump gain errors of external circuitry and the internal errors of the HI7190 together and null them out. This mode will convert the external differential signal applied to the V_{IN} inputs and stores the converted value in the Negative Full Scale Calibration Register. *The user must apply the -Full Scale voltage to the HI7190 analog inputs and allow the signal to settle **before** selecting this mode.* After 4 conversion periods the $\overline{\text{DRDY}}$ line will activate signaling the calibration is complete and valid data is present in the Data Output Register.

System Offset/Internal Gain Calibration Mode

Please note: System Offset/Internal Gain is only valid when operating in a gain of one. In addition, the offset and gain errors are not reduced as with the full system calibration.

The System Offset/Internal Gain Calibration Mode is a single step process that updates the Offset Calibration Register, the Positive Full Scale Calibration Register, and the Negative Full Scale Calibration Register. First the external differential signal applied to the V_{IN} inputs is converted and that value is stored in the Offset Calibration Register. *The user must apply the zero point or offset voltage to the HI7190 analog inputs and allow the signal to settle* ***before*** *selecting this mode.*

After this is completed the Positive and Negative Full Scale Calibration Registers are updated. The inputs V_{INHI} and V_{INLO} are disconnected and the external reference is switched in. The HI7190 then takes 3 conversion cycles to sample the data and update the Positive Full Scale Calibration Register. Next the polarity of the reference voltage across the V_{INHI} and V_{INLO} terminals is reversed and after 3 conversion cycles the Negative Full Calibration Register is updated. The values stored in the Positive and Negative Full Scale Calibration Registers correct for any internal gain errors in the A/D transfer function. After 3 more conversion cycles, the DRDY line will activate signaling that the calibration is complete and valid data is present in the Data Output Register.

System Gain Calibration Mode

The Gain Calibration Mode is a single step process that updates the Positive and Negative Full Scale Calibration Registers. This mode will convert the external differential signal applied to the V_{IN} inputs and then store that value in the Negative Full Scale Calibration Register. Then the polarity of the input is reversed internally and another conversion is performed. This conversion result is written to the Positive Full Scale Calibration Register. The user must apply the +Full Scale voltage to the HI7190 analog inputs and allow the signal to settle before selecting this mode. After 1 more conversion period the $\overline{DRDY}$ line will activate signaling the calibration is complete and valid data is present in the data output register.

Reserved

This mode is not used in the HI7190 and should not be selected. There is no internal detection logic to keep this condition from being selected and care should be taken not to assert this bit combination.

Offset and Span Limits

There are limits to the amount of offset and gain which can be adjusted out for the HI7190. For both bipolar and unipolar modes the minimum and maximum input spans are 0.2 x V_{REF}/GAIN and 1.2 x V_{REF}/GAIN respectively.

In the unipolar mode the offset plus the span cannot exceed the 1.2 x V_{REF}/GAIN limit. So, if the span is at its minimum value of 0.2 x V_{REF}/GAIN, the offset must be less than 1 x V_{REF}/GAIN. In bipolar mode the span is equidistant around the voltage used for the zero scale point. For this mode the offset plus half the span cannot exceed 1.2 x V_{REF}/GAIN. If the span is at ±0.2 x V_{REF}/GAIN, then the offset can not be greater than ±2 x V_{REF}/GAIN.

Serial Interface

The HI7190 has a flexible, synchronous serial communication port to allow easy interfacing to many industry standard microcontrollers and microprocessors. The serial I/O is compatible with most synchronous transfer formats, including both the Motorola 6805/11 SPI and Intel 8051 SSR protocols. The Serial Interface is a flexible 2-wire or 3-wire hardware interface where the HI7190 can be configured to read and write on a single bidirectional line (SDIO) or configured for writing on SDIO and reading on the SDO line.

The interface is byte organized with each register byte having a specific address and single or multiple byte transfers are supported. In addition, the interface allows flexibility as to the byte and bit access order. That is, the user can specify MSB/LSB first bit positioning and can access bytes in ascending/descending order from any byte position.

The serial interface allows the user to communicate with 5 registers that control the operation of the device.

Data Output Register - a 24-bit, read only register containing the conversion results.

Control Register - a 24-bit, read/write register containing the setup and operating modes of the device.

Offset Calibration Register - a 24-bit, read/write register used for calibrating the zero point of the converter or system.

Positive Full Scale Calibration Register - a 24-bit, read/write register used for calibrating the Positive Full Scale point of the converter or system.

Negative Full Scale Calibration Register - a 24-bit, read/write register used for calibrating the Negative Full Scale point of the converter or system.

Two clock modes are supported. The HI7190 can accept the serial interface clock (SCLK) as an input from the system or generate the SCLK signal as an output. If the MODE pin is logic low the HI7190 is in external clocking mode and the SCLK pin is configured as an input. In this mode the user supplies the serial interface clock and all interface timing specifications are synchronous to this input. If the MODE pin is logic high the HI7190 is in self-clocking mode and the SCLK pin is configured as an output. In self-clocking mode, SCLK runs at $F_{SCLK} = OSC_1/8$ and stalls high at byte boundaries. SCLK does NOT have the capability to stall low in this mode. All interface timing specifications are synchronous to the SCLK output.

Normal operation in self-clocking mode is as follows (See Figure 12): $\overline{CS}$ is sampled low on falling OSC_1 edges. The

first SCLK transition output is delayed 29 OSC_1 cycles from the next rising OSC_1. SCLK transitions eight times and then stalls high for 28 OSC_1 cycles. After this stall period is completed SCLK will again transition eight times and stall high. This sequence will repeat continuously while $\overline{CS}$ is active.

The extra OSC_1 cycle required when coming out of the $\overline{CS}$ inactive state is a one clock cycle latency required to properly sample the $\overline{CS}$ input. Note that the normal stall at byte boundaries is 28 OSC_1 cycles thus giving a SCLK rising to rising edge stall period of 32 OSC_1 cycles.

The affects of $\overline{CS}$ on the I/O are different for self-clocking mode (MODE = 1) than for external mode (MODE = 0). For external clocking mode $\overline{CS}$ inactive disables the I/O state machine, effectively freezing the state of the I/O cycle. That is, an I/O cycle can be interrupted using chip select and the HI7190 will continue with that I/O cycle when re-enabled via $\overline{CS}$. SCLK can continue toggling while $\overline{CS}$ is inactive. If $\overline{CS}$ goes inactive during an I/O cycle, it is up to the user to ensure that the state of SCLK is identical when reactivating $\overline{CS}$ as to what it was when $\overline{CS}$ went inactive. For read operations in external clocking mode, the output will go three-state immediately upon deactivation of $\overline{CS}$.

For self-clocking mode (MODE = 1), the affects of CS are different. If CS transitions high (inactive) during the period when data is being transferred (any non stall time) the HI7190 will complete the data transfer to the byte boundary. That is, once SCLK begins the eight transition sequence, it will always complete the eight cycles. If CS remains inactive after the byte has been transferred it will be sampled and SCLK will remain stalled high indefinitely. If CS has returned to active low before the data byte transfer period is completed the HI7190 acts as if CS was active during the entire transfer period.

It is important to realize that the user can interrupt a data transfer on byte boundaries. That is, if the Instruction Register calls for a 3 byte transfer and $\overline{CS}$ is inactive after only one byte has been transferred, the HI7190, when reactivated, will continue with the remaining two bytes before looking for the next Instruction Register write cycle.

Note that the outputs will NOT go three-state immediately upon CS inactive for read operations in self-clocking mode. In the case of CS going inactive during a read cycle the outputs remain driving until after the last data bit is transferred. In the case of CS inactive during the clock stall time it takes 1 OSC_1 cycle plus prop delay (Max) for the outputs to be disabled.

I/O Port Pin Descriptions

The serial I/O port is a bidirectional port which is used to read the data register and read or write the control register and calibration registers. The port contains two data lines, a synchronous clock, and a status flag. Figure 11 shows a diagram of the serial interface lines.

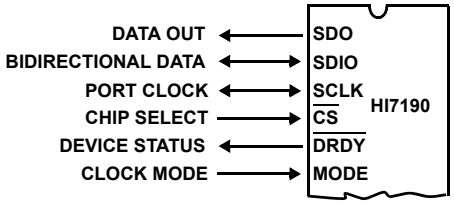

FIGURE 11. HI7190 SERIAL INTERFACE

SDO - Serial Data out. Data is read from this line using those protocols with separate lines for transmitting and receiving data. An example of such a standard is the Motorola Serial Peripheral Interface (SPI) using the 68HC05 and 68HC11 family of microcontrollers, or other similar processors. In the case of using bidirectional data transfer on SDIO, SDO does not output data and is set in a high impedance state.

SDIO - Serial Data in or out. Data is always written to the device on this line. However, this line can be used as a bidirectional data line. This is done by properly setting up the Control Register. Bidirectional data transfer on this line can be used with Intel standard serial interfaces (SSR, Mode 0) in MCS51 and MCS96 family of microcontrollers, or other similar processors.

SCLK - Serial clock. The serial clock pin is used to synchronize data to and from the HI7190 and to run the port state machines. In Synchronous External Clock Mode, SCLK is configured as an input, is supplied by the user, and can run up to a 5MHz rate. In Synchronous Self Clocking Mode, SCLK is configured as an output and runs at $OSC_1/8$.

$\overline{CS}$ - Chip select. This signal is an active low input that allows more than one device on the same serial communication lines. The SDO and SDIO will go to a high impedance state when this signal is high. If driven high during any communication cycle, that cycle will be suspended until $\overline{CS}$ reactivation. Chip select can be tied low in systems that maintain control of SCLK.

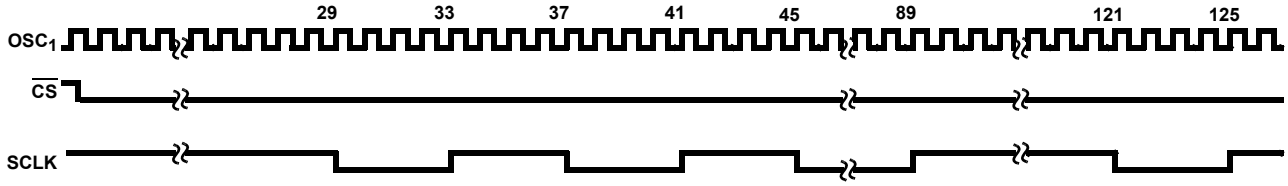

FIGURE 12. SCLK OUTPUT IN SELF-CLOCKING MODE

DRDY - Data Ready. This is an output status flag from the device to signal that the Data Output Register has been updated with the new conversion result. DRDY is useful as an edge or level sensitive interrupt signal to a microprocessor or microcontroller. DRDY low indicates that new data is available at the Data Output Register. DRDY will return high upon completion of a complete Data Output Register read cycle.

MODE - Mode. This input is used to select between Synchronous Self Clocking Mode ('1') or the Synchronous External Clocking Mode ('0'). When this pin is tied to V_{DD} the serial port is configured in the Synchronous Self Clocking mode where the synchronous shift clock (SCLK) for the serial port is generated by the HI7190 and has a frequency of $OSC_1/8$. When the pin is tied to DGND the serial port is configured for the Synchronous External Clocking Mode where the synchronous shift clock for the serial port is generated by an external device up to a maximum frequency of 5MHz.

Programming the Serial Interface

It is useful to think of the HI7190 interface in terms of communication cycles. Each communication cycle happens in 2 phases. The first phase of every communication cycle is the writing of an instruction byte. The second phase is the data transfer as described by the instruction byte. It is important to note that phase 2 of the communication cycle can be a single byte or a multi-byte transfer of data. For example, the 3-byte Data Output Register can be read using one multi-byte communication cycle rather than three single-byte communication cycles. It is up to the user to maintain synchronism with respect to data transfers. If the system processor "gets lost" the only way to recover is to reset the HI7190. Figures 13A and 13B show both a 2-wire and a 3-wire data transfer.

Several formats are available for reading from and writing to the HI7190 registers in both the 2-wire and 3-wire protocols. A portion of these formats is controlled by the CR<2:1> (BD and $\overline{MSB}$) bits which control the byte direction and bit order of a data transfer respectively. These two bits can be written in any combination but only the two most useful will be discussed here.

The first combination is to reset both the BD and MSB bits (BD = 0, MSB = 0). This sets up the interface for descending byte order and MSB first format. When this combination is used the user should always write the Instruction Register such that the starting byte is the most significant byte address. For example, read three bytes of DR starting with the most significant byte. The first byte read will be the most significant in MSB to LSB format. The next byte will be the next least significant (recall descending byte order) again in MSB to LSB order. The last byte will be the next lesser significant byte in MSB to LSB order. The entire word was read MSB to LSB format.

The second combination is to set both the BD and $\overline{MSB}$ bits to 1. This sets up the interface for ascending byte order and LSB first format. When this combination is used the user should always write the Instruction Register such that the starting byte is the least significant byte address. For example, read three bytes of DR starting with the least significant byte. The first byte read will be the least significant in LSB to MSB format. The next byte will be the next greater significant (recall ascending byte order) again in LSB to MSB order. The last byte will be the next greater significant byte in LSB to MSB order. *The entire word was read MSB to LSB format.*

After completion of each communication cycle, The HI7190 interface enters a standby mode while waiting to receive a new instruction byte.

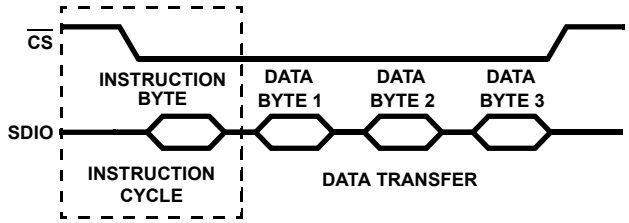

FIGURE 13A. 2-WIRE, 3-BYTE READ OR WRITE TRANSFER

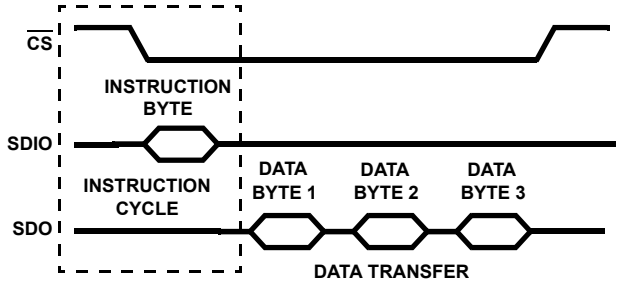

FIGURE 13B. 3-WIRE, 3-BYTE READ TRANSFER

Instruction Byte Phase

The instruction byte phase initiates a data transfer sequence. The processor writes an 8-bit byte (Instruction Byte) to the Instruction Register. The instruction byte informs the HI7190 about the Data transfer phase activities and includes the following information:

- Read or Write cycle
- Number of Bytes to be transferred
- Which register and starting byte to be accessed

Data Transfer Phase

In the data transfer phase, data transfer takes place as set by the Instruction Register contents. See Write Operation and Read Operation sections for detailed descriptions.

Instruction Register

The Instruction Register is an 8-bit register which is used during a communications cycle for setting up read/write operations.

INSTRUCTION REGISTER

MSB	6	5	4	3	2	1	LSB
R/W	MB1	MB0	FSC	A3	A2	A1	A0

R/W - Bit 7 of the Instruction Register determines whether a read or write operation will be done following the instruction byte load. 0 = READ, 1 = WRITE.

MB1, MB0 - Bits 6 and 5 of the Instruction Register determine the number of bytes that will be accessed following the instruction byte load. See Table 5 for the number of bytes to transfer in the transfer cycle.

TABLE 5. MULTIPLE BYTE ACCESS BITS

MB1	MB0	DESCRIPTION
0	0	Transfer 1 Byte
0	1	Transfer 2 Bytes
1	0	Transfer 3 Bytes
1	1	Transfer 4 Bytes

FSC - Bit 4 is used to determine whether a Positive Full Scale Calibration Register I/O transfer (FSC = 0) or a Negative Full Scale Calibration Register I/O transfer (FSC = 1) is being performed (see Table 6).

A3, A2, A1, A0 - Bits 3 and 2 (A3 and A2) of the Instruction Register determine which internal register will be accessed while bits 1 and 0 (A1 and A0) determine which byte of that register will be accessed first. See Table 6 for the address decode.

TABLE 6. INTERNAL DATA ACCESS DECODE STARTING BYTE

FSC	A3	A2	A1	A0	DESCRIPTION
X	0	0	0	0	Data Output Register, Byte 0
X	0	0	0	1	Data Output Register, Byte 1
X	0	0	1	0	Data Output Register, Byte 2
X	0	1	0	0	Control Register, Byte 0
X	0	1	0	1	Control Register, Byte 1
X	0	1	1	0	Control Register, Byte 2
X	1	0	0	0	Offset Cal Register, Byte 0
X	1	0	0	1	Offset Cal Register, Byte 1
X	1	0	1	0	Offset Cal Register, Byte 2
0	1	1	0	0	Positive Full Scale Cal Register, Byte 0
0	1	1	0	1	Positive Full Scale Cal Register, Byte 1
0	1	1	1	0	Positive Full Scale Cal Register, Byte 2

TABLE 6. INTERNAL DATA ACCESS DECODE STARTING BYTE (Continued)

FSC	A3	A2	A1	A0	DESCRIPTION
1	1	1	0	0	Negative Full Scale Cal Register, Byte 0
1	1	1	0	1	Negative Full Scale Cal Register, Byte 1
1	1	1	1	0	Negative Full Scale Cal Register, Byte 2

Write Operation

Data can be written to the Control Register, Offset Calibration Register, Positive Full Scale Calibration Register, and the Negative Full Scale Calibration Register. Write operations are done using the SDIO, $\overline{CS}$ and SCLK lines only, as all data is written into the HI7190 via the SDIO line even when using the 3-wire configuration. Figures 14 and 15 show typical write timing diagrams.

The communication cycle is started by asserting the $\overline{CS}$ line low and starting the clock from its idle state. To assert a write cycle, during the instruction phase of the communication cycle, the Instruction Byte should be set to a write transfer ($\overline{R}$/W = 1).

When writing to the serial port, data is latched into the HI7190 on the rising edge of SCLK. Data can then be changed on the falling edge of SCLK. Data can also be changed on the rising edge of SCLK due to the 0ns hold time required on the data. This is useful in pipelined applications where the data is latched on the rising edge of the clock.

Read Operation - 3-Wire Transfer

Data can be read from the Data Output Register, Control Register, Offset Calibration Register, Positive Full Scale Calibration Register, and the Negative Full Scale Calibration Register. When configured in 3-wire transfer mode, read operations are done using the SDIO, SDO, $\overline{CS}$ and SCLK lines. All data is read via the SDO line. Figures 16 and 17 show typical 3-wire read timing diagrams.

The communication cycle is started by asserting the $\overline{CS}$ line and starting the clock from its idle state. To assert a read cycle, during the instruction phase of the communication cycle, the Instruction Byte should be set to a read transfer ($\overline{R}$/W = 0).

When reading the serial port, data is driven out of the HI7190 on the falling edge of SCLK. Data can be registered externally on the next rising edge of SCLK.

Read Operation - 2-Wire Transfer

Data can be read from the Data Output Register, Control Register, Offset Calibration Register, Positive Full Scale Calibration Register, and the Negative Full Scale Calibration Register. When configured in two-wire transfer mode, read operations are done using the SDIO, $\overline{CS}$ and SCLK lines. All data is read via the SDIO line. Figures 18 and 19 show typical 2-wire read timing diagrams.

The communication cycle is started by asserting the CS line and starting the clock from its idle state. To assert a read cycle, during the instruction phase of the communication cycle, the Instruction Byte should be set to a read transfer (R/W = 0).

When reading the serial port, data is driven out of the HI7190 on the falling edge of SCLK. Data can be registered externally on the next rising edge of SCLK.

Detailed Register Descriptions

Data Output Register

The Data Output Register contains 24 bits of converted data. This register is a read only register.

BYTE 2

MSB	22	21	20	19	18	17	16
D23	D22	D21	D20	D19	D18	D17	D16

BYTE 1

15	14	13	12	11	10	9	8
D15	D14	D13	D12	D11	D10	D9	D8

BYTE 0

7	6	5	4	3	2	1	LSB
D7	D6	D5	D4	D3	D2	D1	D0

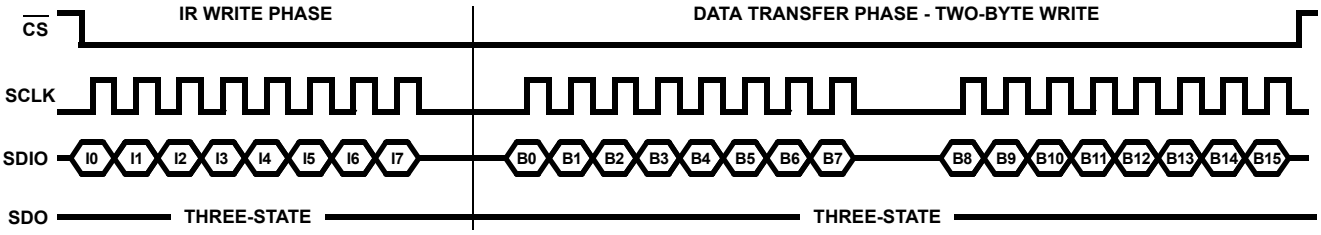

FIGURE 14. DATA WRITE CYCLE, SCLK IDLE LOW

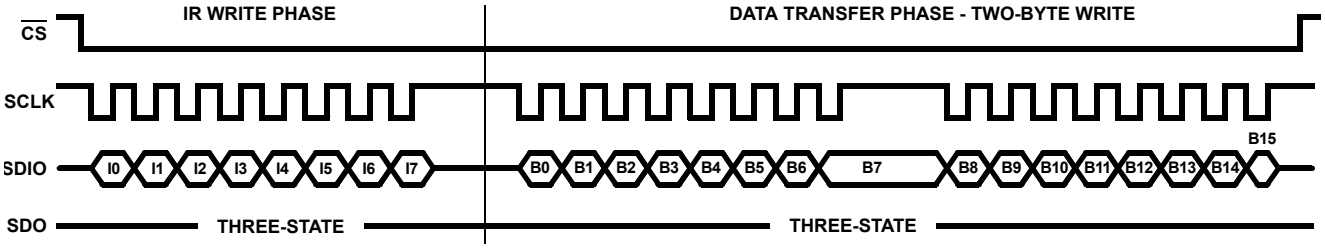

FIGURE 15. DATA WRITE CYCLE, SCLK IDLE HIGH

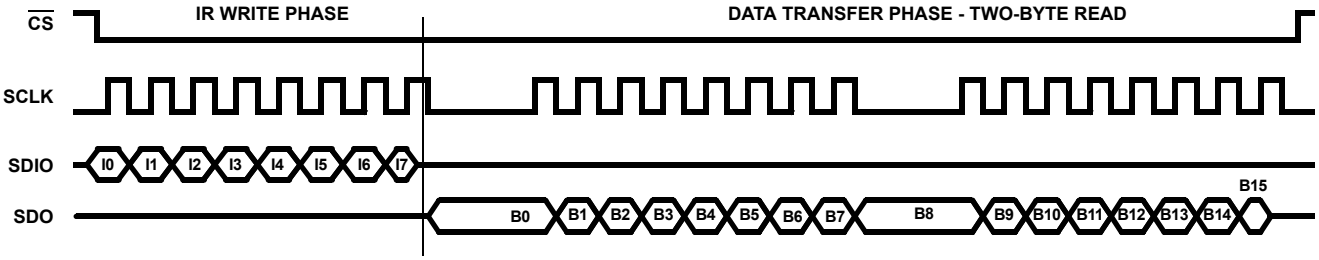

FIGURE 16. DATA READ CYCLE, 3-WIRE CONFIGURATION, SCLK IDLE LOW

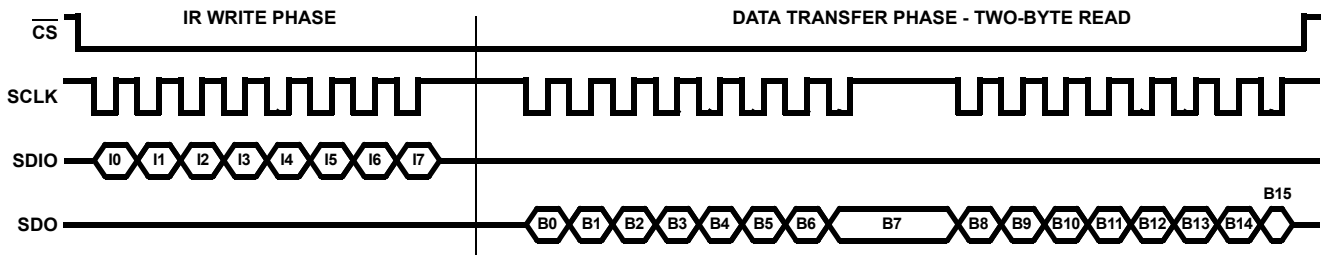

FIGURE 17. DATA READ CYCLE, 3-WIRE CONFIGURATION, SCLK IDLE HIGH

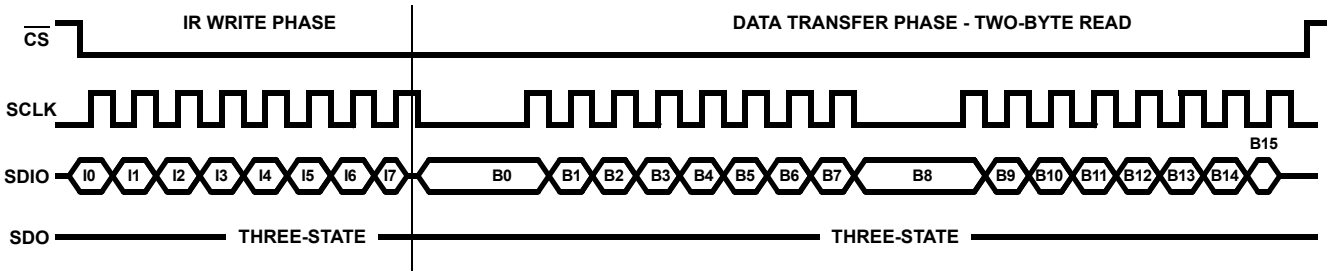

FIGURE 18. DATA READ CYCLE, 2-WIRE CONFIGURATION, SCLK IDLE LOW

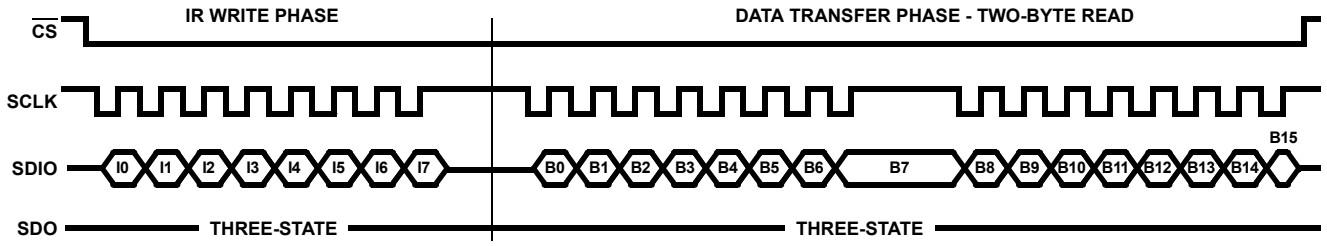

FIGURE 19. DATA READ CYCLE, 2-WIRE CONFIGURATION, SCLK IDLE HIGH

Control Register

The Control Register contains 24-bits to control the various sections of the HI7190. This register is a read/write register.

BYTE 2

MSB	22	21	20	19	18	17	16
DC	FP10	FP9	FP8	FP7	FP6	FP5	FP4

BYTE 1

15	14	13	12	11	10	9	8
FP3	FP2	FP1	FP0	MD2	MD1	MD0	B/U

BYTE 0

7	6	5	4	3	2	1	LSB
G2	G1	G0	BO	SB	BD	MSB	SDL

DC - Bit 23 is the Data Coding Bit used to select between two's complementary and offset binary data coding. When this bit is set (DC = 1) the data in the Data Output Register will be two's complement. When cleared (DC = 0) this data will be offset binary. When operating in the unipolar mode the output data is available in straight binary only (the DC bit is ignored). This bit is cleared after a $\overline{\text{RESET}}$ is applied to the part.

FP10 through FP0 - Bits 22 through 12 are the Filter programming bits that determine the frequency response of the digital filter. These bits determine the filter cutoff frequency, the position of the first notch and the data rate of the HI7190. The first notch of the filter is equal to the decimation rate and can be determined by the formula:

$$f_{NOTCH} = f_{OSC} /(512 \times CODE)$$

where CODE is the decimal equivalent of the value in FP10 through FP0. The values that can be programmed into these bits are 10 to 2047 decimal, which allows a conversion rate range of 9.54Hz to 1.953kHz when using a 10MHz clock.

Changing the filter notch frequency, as well as the selected gain, impacts resolution. The output data rate (or effective conversion time) for the device is equal to the frequency selected for the first notch to the filter. For example, if the first notch of the filter is selected at 50Hz then a new word is available at a 50Hz rate or every 20ms. If the first notch is at 1kHz a new word is available every 1ms.

The settling-time of the converter to a full scale step input change is between 3 and 4 times the data rate. For example, with the first filter notch at 50Hz, the worst case settling time to a full scale step input change is 80ms. If the first notch is 1kHz, the settling time to a full scale input step is 4ms maximum.

The -3dB frequency is determined by the programmed first notch frequency according to the relationship:

$f_{-3dB} = 0.262 \times f_{NOTCH}$.

MD2 through MD0 - Bits 11 through 9 are the Operational Modes of the converter. See Table 4 for the Operational Modes description. After a $\overline{\text{RESET}}$ is applied to the part these bits are set to the self calibration mode.

B/U - Bit 8 is the Bipolar/Unipolar select bit. When this bit is set the HI7190 is configured for bipolar operation. When this bit is reset the part is in unipolar mode. This bit is set after a $\overline{\text{RESET}}$ is applied to the part.

G2 through G0 - Bits 7 through 5 select the gain of the input analog signal. The gain is accomplished through a programmable gain instrumentation amplifier that gains up incoming signals from 1 to 8. This is achieved by using a switched capacitor voltage multiplier network preceding the modulator. The higher gains (i.e., 16 to 128) are achieved through a combination of a PGIA gain of 8 and a digital multiply after the digital filter (see Table 7). The gain will affect noise and Signal to Noise Ratio of the conversion. These bits are cleared to a gain of 1 (G2, G1, G0 = 000) after a $\overline{\text{RESET}}$ is applied to the part.

TABLE 7. GAIN SELECT BITS

G2	G1	G0	GAIN	GAIN ACHIEVED
0	0	0	1	PGIA = 1, Filter Multiply = 1
0	0	1	2	PGIA = 2, Filter Multiply = 1
0	1	0	4	PGIA = 4, Filter Multiply = 1
0	1	1	8	PGIA = 8, Filter Multiply = 1
1	0	0	16	PGIA = 8, Filter Multiply = 2
1	0	1	32	PGIA = 8, Filter Multiply = 4
1	1	0	64	PGIA = 8, Filter Multiply = 8
1	1	1	128	PGIA = 8, Filter Multiply = 16

BO - Bit 4 is the Transducer Burn-Out Current source enable bit. When this bit is set (BO = 1) the burn-out current source connected to V_{INHI} internally is enabled. This current source can be used to detect the presence of an external connection to V_{INHI}. This bit is cleared after a $\overline{\text{RESET}}$ is applied to the part.

SB - Bit 3 is the Standby Mode enable bit used to put the HI7190 in a lower power/standby mode. When this bit is set (SB = 1) the filter nodes are halted, the $\overline{\text{DRDY}}$ line is set high and the modulator clock is disabled. When this bit is cleared the HI7190 begins operation as described by the contents of the Control Register. For example, if the Control Register is programmed for Self Calibration Mode and a notch frequency to 10Hz, the HI7190 will perform the self calibration before providing the data at the 10Hz rate. This bit is cleared after a $\overline{\text{RESET}}$ is applied to the part.

BD - Bit 2 is the Byte Direction bit used to select the multi-byte access ordering. The bit determines the either ascending or descending order access for the multi-byte registers. When set (BD = 1) the user can access multi-byte registers in ascending byte order and when cleared (BD = 0) the multi-byte registers are accessed in descending byte order. This bit is cleared after a $\overline{\text{RESET}}$ is applied to the part.

$\overline{\text{MSB}}$ - Bit 1 is used to select whether a serial data transfer is MSB or LSB first. This bit allows the user to change the order that data can be transmitted or received by the HI7190. When this bit is cleared ($\overline{\text{MSB}}$ = 0) the MSB is the first bit in a serial data transfer. If set ($\overline{\text{MSB}}$ = 1), the LSB is the first bit transferred in the serial data stream. This bit is cleared after a $\overline{\text{RESET}}$ is applied to the part.

SDL - Bit 0 is the Serial Data Line control bit. This bit selects the transfer protocol of the serial interface. When this bit is cleared (SDL = 0), both read and write data transfers are done using the SDIO line. When set (SDL = 1), write transfers are done on the SDIO line and read transfers are done on the SDO line. This bit is cleared after a $\overline{\text{RESET}}$ is applied to the part.

Reading the Data Output Register

The HI7190 generates an active low interrupt ($\overline{\text{DRDY}}$) indicating valid conversion results are available for reading. At this time the Data Output Register contains the latest conversion result available from the HI7190. Data integrity is maintained at the serial output port but it is possible to miss a conversion result if the Data Output Register is not read within a given period of time. Maintaining data integrity means that if a Data Output Register read of conversion N is begun but not finished before the next conversion (conversion N + 1) is complete, the $\overline{\text{DRDY}}$ line remains active low and the data being read is not overwritten.

In addition to the Data Output Register, the HI7190 has a one conversion result storage buffer. No conversion results will be lost if the following constraints are met.

1) A Data Output Register read cycle is started for a given conversion (conversion X) $1/f_N - (128*1/f_{OSC})$ after $\overline{\text{DRDY}}$ initially goes active low. Failure to start the read cycle may

result in conversion X + 1 data overwriting conversion X results. For example, with f_{OSC} = 10MHz, f_N = 2kHz, the read cycle must start within 1/2000 - 128(1/10^6) = 487µs after $\overline{DRDY}$ went low.

2) The Data Output Register read cycle for conversion X must be completed within 2(1/f_N)-1440(1/f_{OSC}) after $\overline{DRDY}$ initially goes active low. If the read cycle for conversion X is not complete within this time the results of conversion X + 1 are lost and results from conversion X + 2 are now stored in the data output word buffer.

Completing the Data Output Register read cycle inactivates the $\overline{DRDY}$ interrupt. If the one word data output buffer is full when this read is complete this data will be immediately transferred to the Data Output Register and a new $\overline{DRDY}$ interrupt will be issued after the minimum $\overline{DRDY}$ pulse high time is met.

Writing the Control Register

If data is written to byte 2 and/or byte 1 of the Control Register the $\overline{DRDY}$ output is taken high and the device re-calibrates if written to a calibration mode. This action is taken because it is assumed that by writing byte 2 or byte 1 that the user either reprogrammed the filter or changed modes of the part. However, if a single data byte is written to byte 0, it is assumed that the gain has NOT been changed. It is up to the user to re-calibrate the HI7190 after the gain has been changed by this method. It is recommended that the entire Control Register be written to when changing the selected gain. This ensures that the part is re-calibrated before the $\overline{DRDY}$ signal goes low indicating valid data is available.

Offset Calibration Register

The Offset Calibration Register is a 24-bit register containing the offset correction factor. This register is indeterminate on power-up but will contain a Self Calibration correction value after a $\overline{RESET}$ has been applied.

BYTE 2

MSB	22	21	20	19	18	17	16
O23	O22	O21	O20	O19	O18	O17	O16

BYTE 1

15	14	13	12	11	10	9	8
O15	O14	O13	O12	O11	O10	O9	O8

BYTE 0

7	6	5	4	3	2	1	LSB
O7	O6	O5	O4	O3	O2	O1	O0

The Offset Calibration Register holds the value that corrects the filter output data to all 0's when the analog input is 0V.

Positive Full Scale Calibration Register

The Positive Full Scale Calibration Register is a 24-bit register containing the Positive Full Scale correction coefficient. This coefficient is used to determine the positive gain slope factor. This register is indeterminate on power-up but will contain a Self Calibration correction coefficient after a $\overline{RESET}$ has been applied.

BYTE 2

MSB	22	21	20	19	18	17	16
P23	P22	P21	P20	P19	P18	P17	P16

BYTE 1

15	14	13	12	11	10	9	8
P15	P14	P13	P12	P11	P10	P9	P8

BYTE 0

7	6	5	4	3	2	1	LSB
P7	P6	P5	P4	P3	P2	P1	P0

Negative Full Scale Calibration Register

The Negative Full Scale Calibration Register is a 24-bit register containing the Negative Full Scale correction coefficient. This coefficient is used to determine the negative gain slope factor. This register is indeterminate on power-up but will contain a Self Calibration correction coefficient after a $\overline{RESET}$ has been applied.

BYTE 2

MSB	22	21	20	19	18	17	16
N23	N22	N21	N20	N19	N18	N17	N16

BYTE 1

15	14	13	12	11	10	9	8
N15	N14	N13	N12	N11	N10	N9	N8

BYTE 0

7	6	5	4	3	2	1	LSB
N7	N6	N5	N4	N3	N2	N1	N0

Die Characteristics

DIE DIMENSIONS

3550µm x 6340µm

METALLIZATION

Type: AlSiCu
Thickness:Metal 2, 16kÅ
Metal 1, 6kÅ

SUBSTRATE POTENTIAL (POWERED UP)

AV_{SS}

PASSIVATION

Type: Sandwich
Thickness:Nitride 8kÅ
USG 1kÅ

Metallization Mask Layout

HI7190

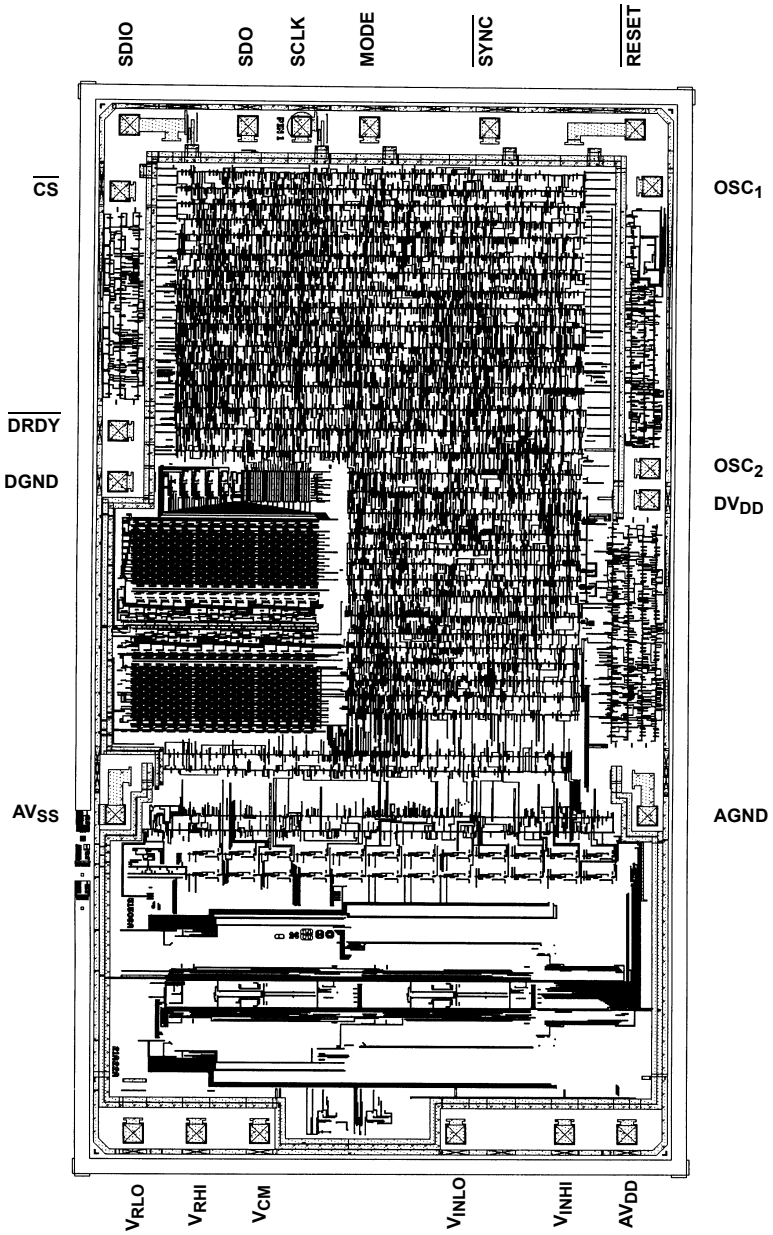

Dual-In-Line Plastic Packages (PDIP)

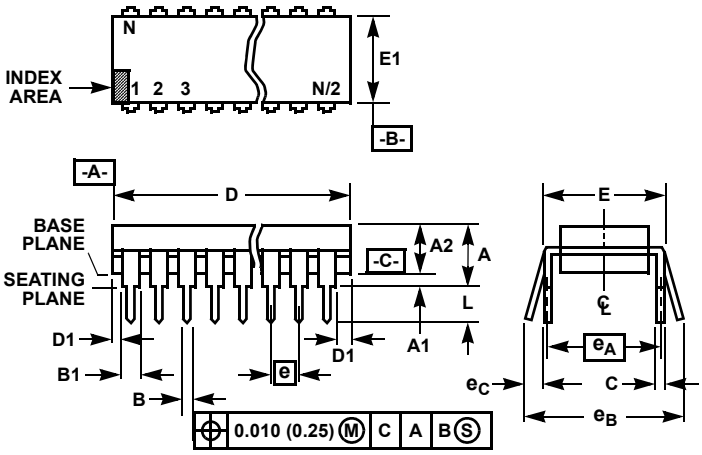

NOTES:

1. Controlling Dimensions: INCH. In case of conflict between English and Metric dimensions, the inch dimensions control.
2. Dimensioning and tolerancing per ANSI Y14.5M-1982.
3. Symbols are defined in the “MO Series Symbol List” in Section 2.2 of Publication No. 95.
4. Dimensions A, A1 and L are measured with the package seated in JEDEC seating plane gauge GS-3.
5. D, D1, and E1 dimensions do not include mold flash or protrusions. Mold flash or protrusions shall not exceed 0.010 inch (0.25mm).
6. E and e_A are measured with the leads constrained to be perpendicular to datum -C-.
7. e_B and e_C are measured at the lead tips with the leads unconstrained. e_C must be zero or greater.
8. B1 maximum dimensions do not include dambar protrusions. Dambar protrusions shall not exceed 0.010 inch (0.25mm).
9. N is the maximum number of terminal positions.
10. Corner leads (1, N, N/2 and N/2 + 1) for E8.3, E16.3, E18.3, E28.3, E42.6 will have a B1 dimension of 0.030 - 0.045 inch (0.76 - 1.14mm).

E20.3 **(JEDEC MS-001-AD ISSUE D)**
20 LEAD DUAL-IN-LINE PLASTIC PACKAGE

SYMBOL	INCHES		MILLIMETERS		NOTES
	MIN	MAX	MIN	MAX	
A	-	0.210	-	5.33	4
A1	0.015	-	0.39	-	4
A2	0.115	0.195	2.93	4.95	-
B	0.014	0.022	0.356	0.558	-
B1	0.045	0.070	1.55	1.77	8
C	0.008	0.014	0.204	0.355	-
D	0.980	1.060	24.89	26.9	5
D1	0.005	-	0.13	-	5
E	0.300	0.325	7.62	8.25	6
E1	0.240	0.280	6.10	7.11	5
e	0.100 BSC		2.54 BSC		-
e_A	0.300 BSC		7.62 BSC		6
e_B	-	0.430	-	10.92	7
L	0.115	0.150	2.93	3.81	4
N	20		20		9

Rev. 0 12/93

Small Outline Plastic Packages (SOIC)

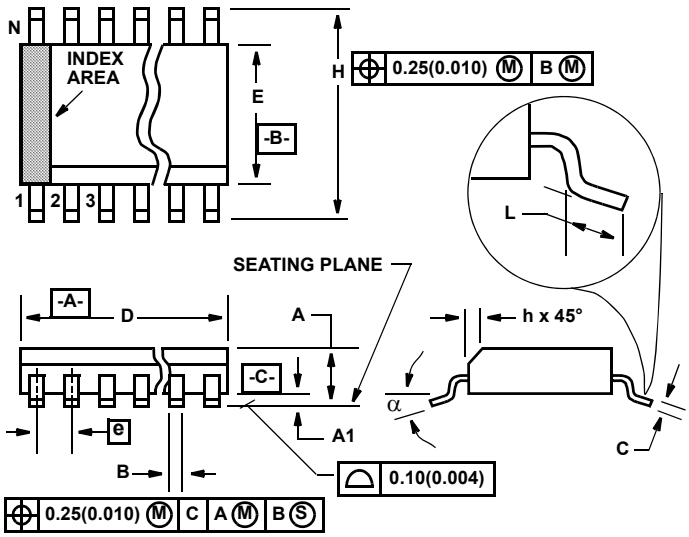

M20.3 (JEDEC MS-013-AC ISSUE C)
20 LEAD WIDE BODY SMALL OUTLINE PLASTIC PACKAGE

SYMBOL	INCHES		MILLIMETERS		NOTES
	MIN	MAX	MIN	MAX	
A	0.0926	0.1043	2.35	2.65	-
A1	0.0040	0.0118	0.10	0.30	-
B	0.014	0.019	0.35	0.49	9
C	0.0091	0.0125	0.23	0.32	-
D	0.4961	0.5118	12.60	13.00	3
E	0.2914	0.2992	7.40	7.60	4
e	0.050 BSC		1.27 BSC		-
H	0.394	0.419	10.00	10.65	-
h	0.010	0.029	0.25	0.75	5
L	0.016	0.050	0.40	1.27	6
N	20		20		7
α	0°	8°	0°	8°	-

Rev. 2 6/05

NOTES:

1. Symbols are defined in the “MO Series Symbol List” in Section 2.2 of Publication Number 95.
2. Dimensioning and tolerancing per ANSI Y14.5M-1982.
3. Dimension “D” does not include mold flash, protrusions or gate burrs. Mold flash, protrusion and gate burrs shall not exceed 0.15mm (0.006 inch) per side.
4. Dimension “E” does not include interlead flash or protrusions. Interlead flash and protrusions shall not exceed 0.25mm (0.010 inch) per side.
5. The chamfer on the body is optional. If it is not present, a visual index feature must be located within the crosshatched area.
6. “L” is the length of terminal for soldering to a substrate.
7. “N” is the number of terminal positions.
8. Terminal numbers are shown for reference only.
9. The lead width “B”, as measured 0.36mm (0.014 inch) or greater above the seating plane, shall not exceed a maximum value of 0.61mm (0.024 inch)
10. Controlling dimension: MILLIMETER. Converted inch dimensions are not necessarily exact.

© Copyright Intersil Americas LLC 2003-2006. All Rights Reserved.
All trademarks and registered trademarks are the property of their respective owners.

For additional products, see www.intersil.com/en/products.html

Intersil products are manufactured, assembled and tested utilizing ISO9001 quality systems as noted in the quality certifications found at www.intersil.com/en/support/qualandreliability.html

Intersil products are sold by description only. Intersil may modify the circuit design and/or specifications of products at any time without notice, provided that such modification does not, in Intersil's sole judgment, affect the form, fit or function of the product. Accordingly, the reader is cautioned to verify that datasheets are current before placing orders. Information furnished by Intersil is believed to be accurate and reliable. However, no responsibility is assumed by Intersil or its subsidiaries for its use; nor for any infringements of patents or other rights of third parties which may result from its use. No license is granted by implication or otherwise under any patent or patent rights of Intersil or its subsidiaries.

For information regarding Intersil Corporation and its products, see www.intersil.com