24-Bit, 4-Channel Simultaneous Sampling 1.5 MSPS Precision Alias Free ADC

Data Sheet

AD7134

FEATURES

- Alias free: inherent antialias rejection high performance mode 102.5 dB, typical
- Excellent ac and dc performance
  - 108 dB dynamic range at ODR = 374 kSPS, FIR filter, typical
  - 137 dB dynamic range at ODR = 10 SPS, sinc3 filter, typical
  - THD: −120 dB typical with 1 kHz input tone
  - Offset error drift: 0.7 µV/°C typical
  - Gain drift: 2 ppm/°C typical
  - INL: ±2 ppm of FSR typical
- Dynamic range enhancement: 4:1 and 2:1 averaging mode 126 dB, A weighted dynamic range
- Resistive ADC and reference input
- Easy to sync: asynchronous sample rate converter
  - Multidevice synchronization with one signal line
  - Programmable data rates from 0.01 kSPS to 1496 kSPS with resolution of 0.01 SPS
  - Option to control output data rate by external signal
- Linear phase digital filter options
  - Low ripple FIR filter: 32 µdB pass-band ripple, dc to 161.942 kHz
  - Low latency sinc3 filter and sinc6 filter, dc to 391.5 kHz
  - Sinc3 filter with 50 Hz/60 Hz rejection
- Crosstalk: 130.7 dBFS
- Daisy-chaining
- CRC error checking on data and SPI interface
- Two power modes: high performance mode and low power mode
- Power supply: 4.5 V to 5.5 V and 1.65 V to 1.95 V
- 1.8 V IOVDD level
- External reference: 4.096 V or 5 V
- Crystal or external CMOS clock of 48 MHz
- SPI or pin (standalone) configurable operation
- Operating temperature range: 0°C to 85°C
- Available in 8 mm × 8 mm, 56-lead LFCSP with exposed pad

APPLICATIONS

- Electrical test and measurement
- Audio test
- 3-phase power quality analysis
- Control and hardware in loop verification
- Sonars
- Condition monitoring for predictive maintenance
- Acoustic and material science research and development

FUNCTIONAL BLOCK DIAGRAM

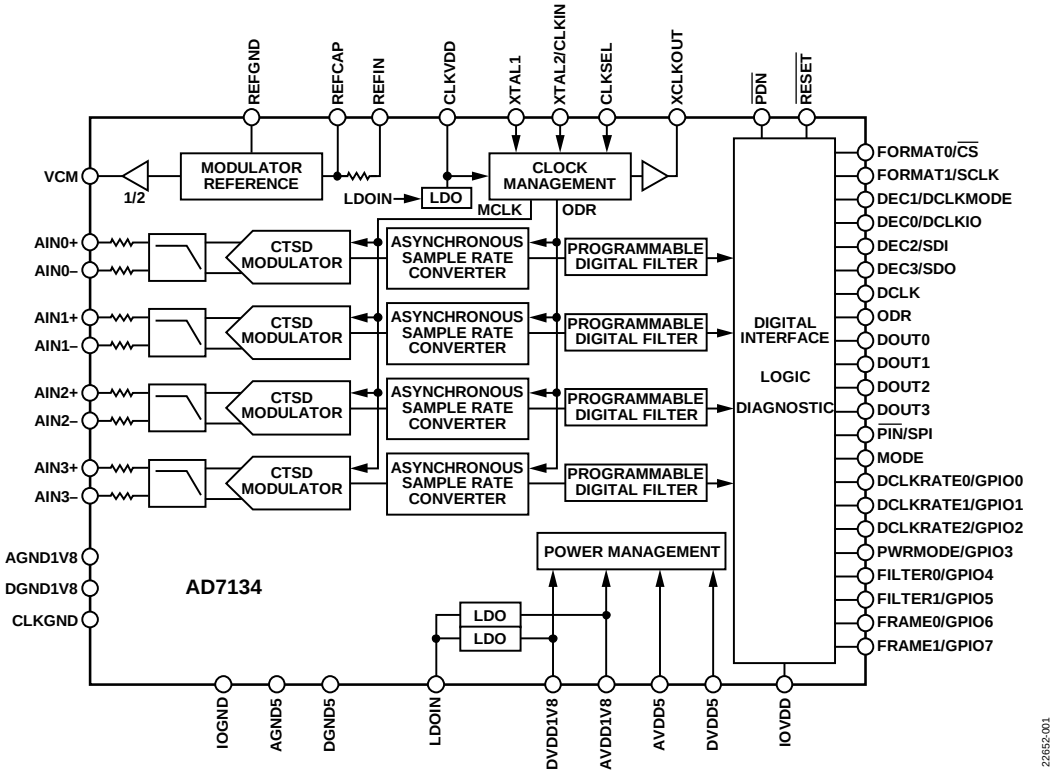

Figure 1.

Rev. 0

Document Feedback

Information furnished by Analog Devices is believed to be accurate and reliable. However, no responsibility is assumed by Analog Devices for its use, nor for any infringements of patents or other rights of third parties that may result from its use. Specifications subject to change without notice. No license is granted by implication or otherwise under any patent or patent rights of Analog Devices. Trademarks and registered trademarks are the property of their respective owners.

One Technology Way, P.O. Box 9106, Norwood, MA 02062-9106, U.S.A.
Tel: 781.329.4700
©2020 Analog Devices, Inc. All rights reserved.
Technical Support
www.analog.com

TABLE OF CONTENTS

Features ... 1
Applications ... 1
Functional Block Diagram ... 1
Revision History ... 2
General Description ... 3
Specifications ... 4
  Timing Specifications ... 10
Absolute Maximum Ratings ... 12
  Thermal Resistance ... 12
  ESD Caution ... 12
Pin Configuration and Function Descriptions ... 13
Typical Performance Characteristics ... 17
Terminology ... 26
Theory of Operation ... 28
  Continuous Time Sigma-Delta Modulator ... 28
  Easy to Drive Input and Reference ... 28
  Inherent Antialiasing Filter (AAF) ... 29
  Analog Front-End Design Simplification ... 30
Noise Performance and Resolution ... 31
Circuit Information ... 35
  Core Signal Chain ... 35
  Analog Inputs ... 35
  VCM Output ... 35
  Reference Input ... 36
  Clock Input ... 36
  XCLKOUT Output ... 36
  Power Options ... 37
  Reset ... 37
  Asynchronous Sample Rate Converter ... 37
  Digital Filters ... 39
Quick Start Guide ... 42
  Standalone Mode ... 43
  Low Latency Synchronous Data Acquisition ... 43
Device Control ... 44
  Pin Control Mode ... 44
  SPI Control Mode ... 45
  Multifunction Pins ... 45
Device Configuration ... 46
  Programming Output Data Rate and Clock ... 46
  Programming Digital Filter ... 49
  Programming Data Interface ... 49
  Power Modes ... 50
  Inherent Antialiasing Filter Modes ... 51
Dynamic Range Enhancement, Channel Averaging ... 52
Calibration ... 53
  Offset Calibration ... 53
  Gain Calibration ... 53
Applications Information ... 54
  Power Supply ... 54
  Reference Noise Filtering ... 54
  Multidevice Synchronization ... 55
  Coherent Sampling ... 55
  Low Latency Digital Control Loop ... 55
  Automatic Gain Control ... 56
  Front-End Design Examples ... 56
Digital Interface ... 58
  SPI Interface ... 58
  Data Interface ... 59
  Minimum I/O Mode ... 64
Diagnostics ... 65
  Internal Fuse Integrity Check ... 65
  Analog Input Overrange ... 66
  MCLK Counter ... 66
  SPI Interface Monitoring ... 66
  Memory Map Integrity Check ... 66
  ODR Input Frequency Check ... 66
  Digital Filter Overflow and Underflow ... 67
  DCLK Error ... 67
GPIO Functionality ... 68
  Pin Error Reporting ... 68
Register Map (SPI Control) ... 69
Register Details ... 71
Outline Dimensions ... 86
  Ordering Guide ... 86

REVISION HISTORY

4/2020—Revision 0: Initial Version

GENERAL DESCRIPTION

The AD7134 is a quad channel, low noise, simultaneous sampling, precision analog-to-digital converter (ADC) that delivers on functionality, performance, and ease of use.

Based on the continuous time sigma-delta (CTSD) modulation scheme, the AD7134 removes the traditionally required switched capacitor circuitry sampling preceding the Σ-Δ modulator, which leads to a relaxation of the ADC input driving requirement. The CTSD architecture also inherently rejects signals around the ADC aliasing frequency band, giving the device its inherent antialiasing capability, and removes the need for a complex external antialiasing filter.

The AD7134 has four independent converter channels in parallel, each with a CTSD modulator and a digital decimation and filtering path. The AD7134 enables simultaneous sampling of four separate signal sources, each supporting a maximum input bandwidth of 391.5 kHz and achieving tight phase matching between these four signal measurements. The high level of channel integration, together with its simplified analog front-end requirement, enables the AD7134 to provide a high density multichannel data acquisition solution in a small form factor.

The signal chain simplification property of the AD7134 also improves the system level performance through the reduction of noise, error, mismatch, and distortion that is normally introduced by the analog front-end circuitry.

The AD7134 offers excellent dc and ac performance. The bandwidth of each ADC channel ranges from dc to 391.5 kHz, making the device an ideal candidate for universal precision data acquisition solutions supporting a breadth of sensor types, from temperature and pressure to vibration and shock.

The AD7134 offers a large number of features and configuration options, giving the user the flexibility to achieve the optimal balance between bandwidth, noise, accuracy, and power for a given application.

An integrated asynchronous sample rate converter (ASRC) allows the AD7134 to precisely control the decimation ratio and, in turn, the output data rate (ODR) using interpolation and resampling techniques. The AD7134 supports a wide range of ODR frequencies, from 0.01 kSPS to 1496 kSPS with less than 0.01 SPS adjustment resolution, allowing the user to granularly vary sampling speed to achieve coherent sampling. The ODR value can be controlled through the ODR_VAL_INT_x and ODR_VAL_FLT_x registers (Register 0x16 to Register 0x1C, ASRC master mode), or using an external clock source (ASRC slave mode). The ASRC slave mode operation enables synchronous sampling between multiple AD7134 devices to a single system clock. The ASRC simplifies the clock distribution requirement within a medium bandwidth data acquisition system because it no longer requires a high frequency, low jitter master clock from the digital back end to be routed to each ADC.

The ASRC acts as a digital filter and decimates the oversampled data from the Σ-Δ modulator to a lower rate to favor higher precision. The ADC data is then further processed by one of the AD7134 user-selectable digital filter profiles to further reject the out of band signals and noises, and reduce the data rate to the final desired ODR value.

The AD7134 offers three main digital filter profile options: a wideband low ripple filter with a brick wall frequency profile and an ODR range from 2.5 kSPS to 374 kSPS that is suitable for frequency domain analysis, a fast responding sinc3 filter with an ODR range from 0.01 kSPS to 1496 kSPS that is suitable for low latency time domain analysis and low frequency high dynamic range input types, and a balanced sinc6 filter with an ODR range from 2.5 kSPS to 1.496 MSPS, offering optimal noise performance and response time.

The AD7134 is also capable of performing on-board averaging between two or four of its input channels. The result is a near 3 dB, if two channels are combined, or 6 dB, if all four channels are combined, improvement in dynamic range while maintaining the bandwidth.

The AD7134 supports two device configuration schemes: serial peripheral interface (SPI) and hardware pin configuration (pin control mode). The SPI control mode offers access to all the features and configuration options available on the AD7134. SPI control mode also enables access to the on-board diagnostic features designed to enable a robust system design. Pin control mode offers the benefit of simplifying the device configuration, enabling the device to operate autonomously after power-up operating in a standalone mode.

In addition to the optional SPI, the AD7134 has a flexible and independent data interface for transmitting the ADC output data. The data interface can act as either a bus master or a slave with various clocking options to support multiple communication bus protocols. The data interface also supports daisy-chaining and an optional minimum input/output (I/O) mode designed to minimize the number of digital isolator channels required in isolated applications.

The AD7134 has an operating ambient temperature range from 0°C to 85°C. The device is housed in an 8 mm × 8 mm, 56-lead lead frame chip scale package (LFCSP).

Note that throughout this data sheet, multifunction pins, such as FORMAT1/SCLK, are referred to either by the entire pin name or by a single function of the pin, for example, SCLK, when only that function is relevant.

SPECIFICATIONS

AVDD5 = DVDD5 = 4.5 V to 5.5 V, AVDD1V8 = DVDD1V8 = 1.65 V to 1.95 V, CLKVDD = 1.65 V to 1.95 V, LDOIN = 2.6 V to 5.5 V, IOVDD = 1.65 V to 1.95 V, CLKIN = 48 MHz, AGND5 = DGND5 = AGND1V8 = DGND1V8 = IOGND = CLKGND = 0 V, REFIN voltage (V_{REF}) = 4.096 V, high performance mode, input common-mode voltage (V_{CM}) = 2.048 V, wideband 0.433 Hz × ODR filter, Antialiasing 1 (AA1) mode, unless otherwise noted. Typical values are for T_A = 25°C, AVDD5 = DVDD5 = 5 V, AVDD1V8 = DVDD1V8 = CLKVDD = 1.8 V, LDOIN = 5 V, IOVDD = 1.8 V, unless otherwise noted.

Table 1.

Parameter	Test Conditions/Comments	Min	Typ	Max	Unit
ADC SPEED AND DATA OUTPUT					
ODR					
Wideband 0.10825 Hz × ODR and 0.433 Hz × ODR Filters[1, 2]		2.5		374	kSPS
Sinc6 Filter[3]		2.5		1496	kSPS
Sinc3 Filter[4]		0.01		1496	kSPS
−3 dB Bandwidth					
Wideband 0.433 Hz × ODR Filter		1.08		161.942	kHz
Wideband 0.10825 Hz × ODR Filter		0.27		40.48	kHz
Sinc6 Filter		0.47		278.4	kHz
Sinc3 Filter		0.003		391.5	kHz
Data Output Coding			Twos complement, MSB first		
DYNAMIC PERFORMANCE	More information is available in the Noise Performance and Resolution section				
Dynamic Range (DR)	Shorted input				
High Performance Mode	ODR = 374 kSPS	105.7	108		dB
	ODR = 10 SPS, sinc3 filter		137		dB
	A weighted, 1 kHz input, −60 dBFS, ODR = 48 kSPS		120		dB
	2:1 channel averaging, A weighted, 1 kHz input, −60 dBFS, ODR = 48 kSPS		123		dB
	4:1 channel averaging, A weighted, 1 kHz input, −60 dBFS, ODR = 48 kSPS		126		dB
Low Power Mode	ODR = 187 kSPS	102.7	106		dB
Signal-to-Noise Ratio	1 kHz, −0.5 dBFS, sine wave input				
High Performance Mode	ODR = 374 kSPS	105.6	107		dB
Low Power Mode	ODR = 187 kSPS	105.3	106		dB
Signal-to-Noise-and-Distortion Ratio (SINAD)	1 kHz, −0.5 dBFS, sine wave input				
High Performance Mode	ODR = 374 kSPS		106.5		dB
Low Power Mode	ODR = 187 kSPS		105.5		dB
Total Harmonic Distortion (THD)	1 kHz, −0.5 dBFS, sine wave input				
High Performance Mode			−120		dB
Low Power Mode			−119		dB
Spurious-Free Dynamic Range[5] (SFDR)	1 kHz, −0.5 dBFS, sine wave input				
High Performance Mode			125		dBc
Low Power Mode			125		dBc
INTERMODULATION DISTORTION (IMD)	With input tone at 9.7 kHz and 10.3 kHz				
	Second-order		−122		dB
	Third-order		−125		dB

Parameter	Test Conditions/Comments	Min	Typ	Max	Unit
ACCURACY					
Integral Nonlinearity (INL)	End point method				
	High performance mode		±2		ppm of FSR
	Low power mode		±2		ppm of FSR
Offset Error[6]	High performance mode		±100	±700	µV
	Low power mode		±100	±700	µV
Offset Error Drift	High performance mode		0.7	3.7	µV/°C
	Low power mode		0.8	2.7	µV/°C
Gain Error[6]	High performance mode, master mode		350	646	ppm of FSR
	Low power mode, master mode		150	390	ppm of FSR
Gain Drift			2	5.4	ppm/°C
Voltage Noise	0.1 Hz to 10 Hz		1.01		µV p-p
ANALOG INPUTS					
Differential Input Voltage Range (V_{IN})	$-V_{REF}$ is the negative reference voltage and $+V_{REF}$ is the positive reference voltage	$-V_{REF}$		$+V_{REF}$	V
Input Common-Mode Voltage Range (V_{CM})			$V_{REF}/2$	AVDD5/2	V
Input Current			317		µA/V
Input Current Drift			8.3		nA/V/°C
Differential Input Resistance			6.25		kΩ
VCM PIN					
Output Voltage		$V_{REF}/20$		AVDD5/2	V
Load Regulation ($\Delta V_{OUT}/\Delta I_L$)			313		µV/mA
Voltage Regulation ($\Delta V_{OUT}/\Delta V_{AVDD5V}$)			993		µV/V
Short-Circuit Current			45		mA
Loading Capacitance				200	pF
Additive Voltage Noise Density			70		nV/√Hz
EXTERNAL REFERENCE					
REFIN Voltage (V_{REF})	REFIN to REFGND high performance mode		4.096 or 5		V
	REFIN to REFGND low power mode		4.096 or 5		V
REFIN Current	All channels on, high performance mode		5.85		mA
	All channels on, low power mode		3.22		mA
	One channel on, high performance mode		1.53		mA
	One channel on, low power mode		0.9		mA
	REFIN off		0.5		µA
REFIN Current Drift			40		nA/V/°C
REFIN Resistance	All channels on		0.7		kΩ
	One channel on		2.66		kΩ
	All channels on, low power mode		1.27		kΩ
	One channel on, low power mode		4.79		kΩ
MODULATOR MAGNITUDE RESPONSE					
High Performance Mode	At 100 kHz, ODR = 374 kSPS		−0.0202		dB
	At 20 kHz, ODR = 374 kSPS		−0.0024		dB
Low Power Mode	At 50 kHz, ODR = 187 kSPS		−0.0122		dB
	At 20 kHz, ODR = 187 kSPS		−0.00189		dB

Parameter	Test Conditions/Comments	Min	Typ	Max	Unit
SYNCHRONIZATION	At 20 kHz				
Channel to Channel Phase Matching[7]			1.57	3.3	ns
Channel to Channel Phase Matching Drift			4.17		ps/°C
Device to Device Phase Matching[8]	ODR = 1496 kSPS		10		ns
DIGITAL FILTER RESPONSE					
Low Ripple Wideband					
Group Delay			39.8/ODR		sec
Settling Time			79.6/ODR		sec
Pass-Band Ripple			32		µdB
Pass-Band Frequency (f_{PASS})					
Wideband 0.433 Hz × ODR Filter	±32 µdB pass band		0.4 × ODR		Hz
	−0.1 dB pass band		0.401 × ODR		Hz
	−3 dB bandwidth		0.433 × ODR		Hz
Wideband 0.10825 Hz × ODR Filter	±32 µdB pass band		0.1 × ODR		Hz
	−0.1 dB pass band		0.101 × ODR		Hz
	−3 dB bandwidth		0.10825 × ODR		Hz
Stop Band Frequency (f_{STOP})					
Wideband 0.433 Hz × ODR Filter			0.499 × ODR		Hz
Wideband 0.10825 Hz × ODR Filter			0.2 × ODR		Hz
Stop Band Attenuation			110		dB
Sinc6					
Group Delay			3.25/ODR		
Settling Time			6.5/ODR		
Pass Band	−3 dB bandwidth		0.1861 × ODR		sec
Sinc3					
Group Delay (GD)	Latency		1.75/ODR		sec
Settling Time	Complete settling		3.5/ODR		sec
Pass Band	−3 dB bandwidth		0.2617 × ODR		sec
Attenuation					
At 50 Hz	50 SPS, 50 Hz ± 1 Hz		102		dB
At 60 Hz	60 SPS, 60 Hz ± 1 Hz		106		dB
At 50 Hz, 60 Hz	10 SPS, 50 Hz ± 1 Hz, 60 Hz ± 1 Hz		102		dB
At 50 Hz, 60 Hz	50 SPS, 50 Hz ± 1 Hz, 60 Hz ± 1 Hz, sinc3 rejection, and 50 Hz/60 Hz rejection filter[1]		67		dB
COMBINED RESPONSE					
Overall Group Delay	Sinc3 filter, slave gated mode			8/ODR	sec
	Sinc6 filter, slave gated mode			10.5/ODR	sec
REJECTION	High performance mode				
Power Supply Rejection Ratio					
DC					
AVDD5			101.8		dB
DVDD5			80.4		dB

Parameter	Test Conditions/Comments	Min	Typ	Max	Unit
AVDD1V8			87.2		dB
DVDD1V8			100		dB
IOVDD			102		dB
LDOIN			116.6		dB
CLKVDD			61		dB
Power Supply Rejection AC	100 mV p-p, 1 MHz signal on supply with no decoupling capacitor, value with respect to full-scale input				
AVDD5			101		dB
DVDD5			102		dB
AVDD1V8			104		dB
DVDD1V8			101		dB
IOVDD			114		dB
CLKVDD			103		dB
Common-Mode Rejection Ratio (CMRR)	100 mV p-p on V_{CM} with no decoupling capacitor				
DC			78.4		dB
AC	Up to 10 kHz		74.5		dB
Crosstalk	−0.5 dBFS, 1 kHz input on adjacent channels		130.7		dBFS
Input Signal Alias Rejection (AA_{REJ})					
High Performance Mode	−6 dBFS output of band tone from master clock (MCLK) − 160 kHz to MCLK + 160 kHz, AA1 mode		85.4		dB
	−6 dBFS output of band tone from MCLK − 160 kHz to MCLK + 160 kHz, Antialiasing 2 (AA2) mode		102.5		dB
Low Power Mode	−6 dBFS output of band tone from MCLK − 80 kHz to MCLK + 80 kHz, AA1 mode		87.4		dB
	−6 dBFS output of band tone from MCLK − 80 kHz to MCLK + 80 kHz, AA2 mode		97.2		dB
EXTERNAL CLOCK INPUT					
Frequency		47.9	48	48.1	MHz
Duty Cycle		40	50:50	60	%
Input Voltage High		0.65 × CLKVDD			V
Input Voltage Low				0.35 × CLKVDD	V
Input Capacitance			10		pF
CRYSTAL OSCILLATOR					
Frequency	±100 ppm		48		MHz
Start-Up Time			4.4		ms
CLKSEL INPUT LOGIC					
Input High Voltage (V_{INH})		0.7 × IOVDD			V
Input Low Voltage (V_{INL})				0.3 × IOVDD	V
Leakage Currents		−1		+1	µA
XCLKOUT PIN					
Output Frequency			48		MHz
Rise Time/Fall Time (20% to 80%)	45 pF load		0.85		ps
Duty Cycle	External clock input duty cycle = 50:50		53.8		%
Output Voltage High	Source current (I_{SOURCE}) = 100 µA	CLKVDD − 0.2			V
Output Voltage Low	Sink current (I_{SINK}) = 100 µA			0.2	V
ODR PIN					
Output Frequency		0.01		1496	kHz
Output Rise Time/Fall Time (20% to 80%)	45 pF load		2.8		ns
Output Voltage High	I_{SOURCE} = 100 µA	IOVDD − 0.2			V

Parameter	Test Conditions/Comments	Min	Typ	Max	Unit
Output Voltage Low	I_{SINK} = 100 µA			0.2	V
Input Frequency (f_{IN})		0.01		1496	kHz
V_{INH}		0.7 × IOVDD			V
V_{INL}				0.3 × IOVDD	V
Input Capacitance	Pin configured as input		10		pF
DCLK PIN					
Output Frequency		2.93		48000	kHz
Output Rise Time/Fall Time (20% to 80%)	45 pF load		2.8		ns
Output Duty Cycle			50:50		%
Output Voltage High	I_{SOURCE} = 100 µA	IOVDD − 0.2			V
Output Voltage Low	I_{SINK} = 100 µA			0.2	V
f_{IN}				50,000	kHz
V_{INH}		0.7 × IOVDD			V
V_{INL}				0.3 × IOVDD	V
Input Capacitance	Pin configured as input		10		pF
LOGIC INPUTS					
V_{INH}		0.7 × IOVDD			V
V_{INL}				0.2 × IOVDD	V
Leakage Currents		−10		+10	µA
LOGIC OUTPUTS					
Output High Voltage (V_{OH})	I_{SOURCE} = 100 µA	IOVDD − 0.2			V
Output Low Voltage (V_{OL})	I_{SINK} = 100 µA			0.2	V
INTEGRATED LOW DROPOUT (LDO) REGULATOR					
Output Voltage			1.85		V
Input Voltage		2.6		5.5	V
POWER SUPPLY VOLTAGE					
AVDD5 to AGND5		4.5	5	5.5	V
DVDD5 to DGND5		4.5	5	5.5	V
AVDD5 to AGND5	V_{REF} = 5 V	4.7	5	5.5	V
DVDD5 to DGND5	V_{REF} = 5 V	4.7	5	5.5	V
DVDD1V8 to DGND		1.65	1.8	1.95	V
AVDD1V8 to AGND1V8		1.65	1.8	1.95	V
AVDD1V8 to AGND1V8	V_{REF} = 5 V	1.8	1.85	1.95	V
DVDD1V8 to DGND	V_{REF} = 5 V	1.8	1.85	1.95	V
IOVDD to IOGND		1.65	1.8	1.95	V
CLKVDD to CLKGND		1.65	1.8	1.95	V
CLKVDD to CLKGND	V_{REF} = 5 V	1.8	1.85	1.95	V
POWER SUPPLY CURRENT	4 channels active, internal LDO regulator bypassed, XCLKOUT disabled				
High Performance Mode	ODR = 374 kSPS				
AVDD5			8.2	10.3	mA
DVDD5			38.6	44.8	mA
AVDD1V8			56	73.9	mA
DVDD1V8	Sinc3 filter, ODR = 1496 kSPS		60	70.6	mA
	Sinc6 filter, ODR = 1496 kSPS		60.9	71.8	mA
	Wideband 0.433 Hz × ODR filter		90	105.5	mA
IOVDD			2.25	3.17	mA
CLKVDD			2.8	3.53	mA
Low Power Mode	ODR = 187 kSPS				
AVDD5			8.2	10.3	mA
DVDD5			14.1	16.5	mA
AVDD1V8			51	69	mA

Parameter	Test Conditions/Comments	Min	Typ	Max	Unit
DVDD1V8	Sinc3 filter, ODR = 1496 kSPS		30.6	36	mA
	Sinc6 filter, ODR = 1496 kSPS		38.5	45.2	mA
	Wideband 0.433 Hz × ODR filter		48.5	56.8	mA
IOVDD			1.27	1.7	mA
CLKVDD			1.89	2.3	mA
TOTAL POWER CONSUMPTION	External LDO mode: AVDD5 = DVDD5 = 5 V, AVDD1V8 = DVDD1V8 = CLKVDD = IOVDD = LDOIN = 1.8 V, internal LDO regulator bypassed, XCLKOUT disabled				
High Performance Mode	ODR = 374 kSPS, wideband 0.433 Hz × ODR filter				
	4 channels active		504	540	mW
	1 channel active		201		mW
	2:1 averaging		472		mW
	4:1 averaging		450		mW
	ODR = 2.5 kSPS, 4 channels active		418		mW
	ODR = 1496 kSPS, 4 channels active, sinc3 filter		446		mW
Low Power Mode	ODR = 187 kSPS, wideband 0.433 Hz × ODR filter				
	4 channels active		297	386	mW
	1 channel active		121		mW
	2:1 averaging		288		mW
	4:1 averaging		254		mW
	ODR = 2.5 kSPS, 4 channels active		260		mW
	ODR = 1496 kSPS, 4 channels active, sinc3 filter		285		mW
	Internal LDO regulator mode: AVDD5 = DVDD5 = 5 V, LDOIN = 2.6 V, XCLKOUT disabled				
High Performance Mode	ODR = 270 kSPS, wideband 0.433 Hz × ODR filter				
	4 channels active		593		mW
	1 channel active		246		mW
	2:1 averaging		555		mW
	4:1 averaging		530		mW
	ODR = 2.5 kSPS, 4 channels active		484		mW
	ODR = 1496 kSPS, 4 channels active, sinc3 filter		547		mW
Low Power Mode	ODR = 187 kSPS, wideband 0.433 Hz × ODR filter				
	4 channels active		386		mW
	1 channel active		147		mW
	2:1 averaging		356		mW
	4:1 averaging		334		mW
	ODR = 2.5 kSPS, 4 channels active		316		mW
	ODR = 1496 kSPS, 4 channels active, sinc3 filter		355		mW
Full Power-Down Mode			1		mW
Sleep Mode			15		mW

[1] For internal LDO regulator mode, the maximum ODR supported for wideband FIR filters is 270 kSPS.
[2] For slave mode, the maximum ODR supported for wideband FIR filters is 365 kSPS.
[3] For slave mode, the maximum ODR supported for the sinc6 filter is 1460 kSPS.
[4] For slave mode, the maximum ODR supported for the sinc3 filter is 1460 kSPS.
[5] Excluding the first five harmonics.
[6] Following a full system calibration, the offset error and the gain error are in the order of the noise for the programmed output data rate selected. The gain error is a function of the output data rate in slave mode. Therefore, a gain error calibration is needed when the output data rate is changed. It is recommended to perform a periodic system calibration to stop aging related drifts.
[7] Between any two channels on the same device.
[8] Between any two channels on any two devices. SPI slave mode with DCLK as gated input only with the DIG_IF_RESET SPI write issued simultaneously to both devices.

TIMING SPECIFICATIONS

AVDD5 = DVDD5 = 4.5 V to 5.5 V, AVDD1V8 = DVDD1V8 = 1.65 V to 1.95 V, CLKVDD = 1.65 V to 1.95 V, IOVDD = 1.65 V to 1.95 V, CLKIN = 48 MHz, AGND5 = DGND5 = AGND1V8 = DGND1V8 = IOGND = CLKGND = 0 V, T_A = 0°C to 85°C, unless otherwise noted. Typical values are at T_A = 25°C, unless otherwise noted.

Table 2. Device Clock Timing

Parameter	Description	Test Conditions/Comments	Min	Typ	Max	Unit
f_{SYSCLK}	System clock frequency			48		MHz
MCLK	Master clock	High performance mode		$f_{SYSCLK}/2$		Hz
		Low power mode		$f_{SYSCLK}/4$		Hz
f_{DIGCLK}	Internal digital clock (t_{DIGCLK}) = $1/f_{DIGCLK}$			$f_{SYSCLK}/2$		Hz
f_{DCLK}	Data Interface clock (t_{DCLK}) = $1/f_{DCLK}$	DCLK as output, SPI control mode			f_{SYSCLK}	MHz
		DCLK as output, pin control mode			f_{SYSCLK}	MHz
		DCLK as input			50	MHz
f_{SCLK}	SPI clock rate (t_{SCLK}) = $1/f_{SCLK}$				50	MHz

The signal on DOUTx is driven out on the rising edge of the DCLK. t_{ODR_PERIOD} is 1/ODR. See Figure 2.

Table 3. Data Interface Timing with Gated DCLK

Parameter	Description	Test Conditions/Comments	Min	Typ	Max	Unit
t_1	ODR high time	Master mode, $t_{DCLK} > t_{DIGCLK}$	$2.5 \times t_{DCLK}$		$3.5 \times t_{DCLK}$	ns
		Master mode, $t_{DCLK} \leq t_{DIGCLK}$	$3 \times t_{DIGCLK}$		$3 \times t_{DIGCLK} + 4$	ns
		Slave mode	$3 \times t_{DIGCLK}$			ns
t_2	ODR low time	Slave mode	$3 \times t_{DIGCLK}$			ns
t_3	ODR falling edge to DCLK rising edge	Master mode	$t_{DCLK} - 2$			ns
		Slave mode	8			ns
t_4	Last data DCLK falling edge to ODR rising edge	Master mode	$0.5 \times t_{DCLK}$			ns
		Slave mode	$2 \times t_{DCLK}$			ns
t_5	DCLK rising to DOUTx invalid	Master mode	–4			ns
		Slave mode	0			ns
t_6	DCLK rising to DOUTx valid	Master mode	0		3	ns
		Slave mode			8.2	ns
t_7	DCLK low time		$t_{DCLK}/2 - 1$			ns
t_8	DCLK high time		$t_{DCLK}/2 - 1$			ns

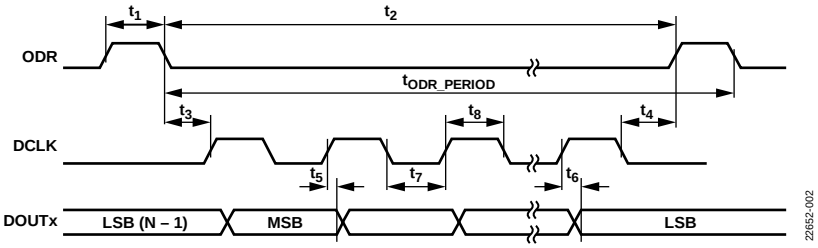

Figure 2. Timing Diagram of Data Interface with Gated DCLK

Signal on DOUTx is driven out on the rising edge of DCLK. See Figure 3.

Table 4. Data Interface Timing with Free Running DCLK

Parameter	Description	Test Conditions/Comments	Min	Typ	Max	Unit
t_9	ODR high time	Master mode, $t_{DCLK} > t_{DIGCLK}$	$2.5 \times t_{DCLK}$		$3.5 \times t_{DCLK} - t_{DIGCLK} + 4$	ns
		Master mode, $t_{DCLK} \leq t_{DIGCLK}$	$3 \times t_{DIGCLK}$		$3 \times t_{DIGCLK} + 4$	ns
		Slave mode, $t_{DCLK} > t_{DIGCLK}$	$3 \times t_{DCLK}$			ns
		Slave mode, $t_{DCLK} \leq t_{DIGCLK}$	$3 \times t_{DIGCLK}$			
t_{10}	ODR low time	Slave mode, $t_{DCLK} > t_{DIGCLK}$	$3 \times t_{DCLK}$			ns
		Slave mode, $t_{DCLK} \leq t_{DIGCLK}$	$3 \times t_{DIGCLK}$			
t_{11}	DCLK rising edge to ODR rising edge	Slave mode	$t_{DCLK}/2$			ns
t_{12}	ODR rising edge to DCLK rising edge	Slave mode	$t_{DCLK}/2$			ns
t_{13}	ODR sampled high to DOUTx active		$3 \times t_{DCLK}$		$3 \times t_{DCLK} + 4$	
t_{14}	DCLK rising to DOUTx invalid	Master mode	−4			ns
t_{15}	DCLK rising to DOUTx valid	Master mode	0		2	ns
		Slave mode			3	ns
t_{16}	DCLK low time		$t_{DCLK}/2 - 1$			ns
t_{17}	DCLK high time		$t_{DCLK}/2 - 1$			ns

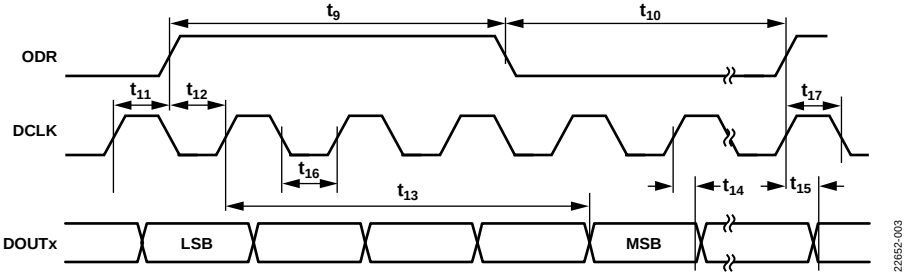

Figure 3. Timing Diagram of Data Interface with Free Running DCLK

SDI is sampled on the rising edge of SCLK. SDO is driven out on the falling edge of SCLK. See Figure 4.

Table 5. SPI Interface Timing

Parameter	Description	Min	Typ	Max	Unit
t_{18}	$\overline{CS}$ falling to data out active	0		7	ns
t_{19}	SCLK falling edge to SDO valid			8	ns
t_{20}	SCLK low time	$t_{SCLK}/2 - 1$			ns
t_{21}	SDI setup time	2			ns
t_{22}	SDI hold time	2			ns
t_{23}	SDO hold time after SCLK falling			7	ns
t_{24}	SCLK high time	$t_{SCLK}/2 - 1$			ns
t_{25}	Last SCLK rising edge to $\overline{CS}$ rising edge	t_{SCLK}			ns
t_{26}	$\overline{CS}$ high time	$0.9 \times t_{SCLK}/2$			ns
t_{27}	$\overline{CS}$ falling edge to SCLK rising edge	9			ns

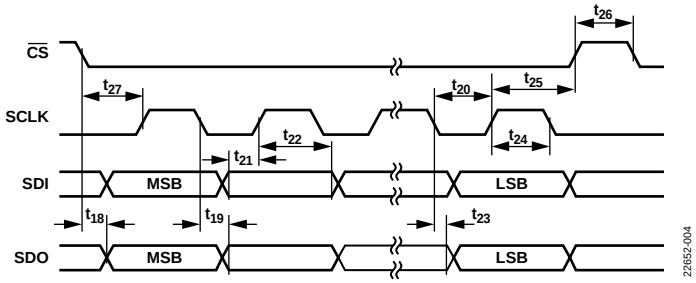

Figure 4. SPI Interface Timing Diagram

ABSOLUTE MAXIMUM RATINGS

Table 6.

Parameter	Rating
AVDD5 to AGND5	−0.3 V to +6 V
DVDD5 to DGND5	−0.3 V to +6 V
AVDD1V8 to AGND1V8	−0.3 V to 2.2 V or LDOIN + 0.3 V (whichever is lower)
DVDD1V8 to DGND1V8	−0.3 V to 2.2 V or LDOIN + 0.3 V (whichever is lower)
CLKVDD to CLKGND	−0.3 V to 2.2 V or LDOIN + 0.3 V (whichever is lower)
IOVDD to IOGND	−0.3 V to +2.2 V
DGND5 to AGND5	−0.3 V to +0.3 V
AGND1V8 to AGND5	−0.3 V to +0.3 V
DGND1V8 to AGND5	−0.3 V to +0.3 V
IOGND to AGND5	−0.3 V to +0.3 V
CLKGND to AGND5	−0.3 V to +0.3 V
LDOIN to AGND5	AVDD1V8 − 0.3 V to 6 V
AINx± Inputs to AGND5	−0.3 V to AVDD5 + 0.3 V
REFIN to AGND5	−0.3 V to AVDD5 + 0.3 V
REFCAP to AGND5	−0.3 V to AVDD5 + 0.3 V
REFGND to AGND5	−0.3 V to +0.3 V
Digital I/O Pins to IOGND	−0.3 V to IOVDD + 0.3 V
XCLKOUT, XTAL2/CLKIN, and XTAL1 to CLKGND	−0.3 V to CLKVDD + 0.3 V
Operating Ambient Temperature Range	0°C to 85°C
Storage Temperature Range	−65°C to +150°C
Pb-Free Temperature, Soldering Reflow (10 sec to 30 sec)	260°C
Junction Temperature	150°C
Package Classification Temperature	260°C

Stresses at or above those listed under Absolute Maximum Ratings may cause permanent damage to the product. This is a stress rating only, functional operation of the product at these or any other conditions above those indicated in the operational section of this specification is not implied. Operation beyond the maximum operating conditions for extended periods may affect product reliability.

THERMAL RESISTANCE

Thermal performance is directly linked to printed circuit board (PCB) design and operating environment. Careful attention to PCB thermal design is required.

θ_{JA} is the natural convection junction to ambient thermal resistance measured in a one cubic foot sealed enclosure. θ_{JC} is the junction to case thermal resistance.

Table 7. Thermal Resistance

Package Type	θ_{JA}	θ_{JC}	Unit
CP-56-9			
2S2P or 1S Test Board	37[1]	5.4[2]	°C/W
2S2P Test Board with 36 Thermal Vias	27[3]	N/A[4]	°C/W

[1] Simulated data based on a JEDEC 2S2P test board in a JEDEC natural convection environment.
[2] Simulated data based on a JEDEC 1S test board, measured at the exposed pad with a cold plate mounted directly to the package surface.
[3] Simulated data based on a JEDEC 2S2P test board with 36 thermal vias in a JEDEC natural convection environment.
[4] N/A means not applicable.

ESD CAUTION

ESD (electrostatic discharge) sensitive device. Charged devices and circuit boards can discharge without detection. Although this product features patented or proprietary protection circuitry, damage may occur on devices subjected to high energy ESD. Therefore, proper ESD precautions should be taken to avoid performance degradation or loss of functionality.

PIN CONFIGURATION AND FUNCTION DESCRIPTIONS

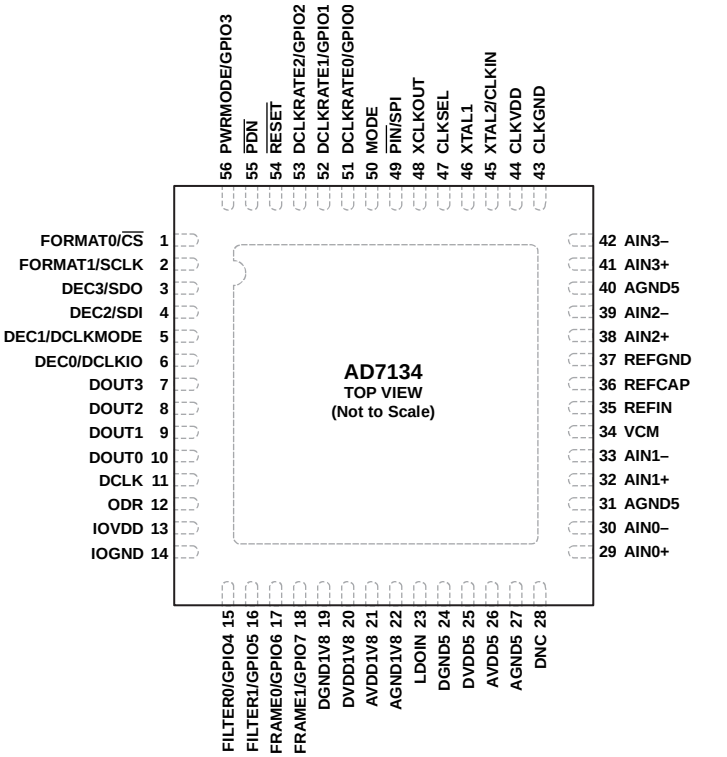

NOTES
1. DNC = DO NOT CONNECT. DO NOT CONNECT TO THIS PIN.
2. EXPOSED PAD. CONNECT THE EXPOSED PAD TO AGND5.

Figure 5. Pin Configuration

Table 8. Pin Function Descriptions

Pin No.	Mnemonic	Type[1]	Description
1	FORMAT0/$\overline{\text{CS}}$	DI	ADC Output Data Format Selection Input 0 in Pin Control Mode (FORMAT0). Tie this pin to IOVDD or to IOGND to set the number of DOUTx pins used to output ADC conversion data. See the Output Channel Format section for more details. Chip Select Input in SPI Control Mode ($\overline{\text{CS}}$).
2	FORMAT1/SCLK	DI	ADC Output Data Format Selection Input 1 in Pin Control Mode (FORMAT1). Tie this pin to IOVDD or to IOGND to set the number of DOUTx pins used to output ADC conversion data. See the Output Channel Format section for more details. Serial Clock Input in SPI Control Mode (SCLK).
3	DEC3/SDO	DI/O	Decimation Ratio Selection Input 3 in Pin Control Master Mode or PLL Lock Status Output in Pin Control Slave Mode (DEC3). Tie this pin to IOVDD or to IOGND to set the output data rate. See the Programming Output Data Rate and Clock section for more details. In pin control slave mode, this pin is output high to indicate the internal PLL is in lock. Serial Data Output in SPI Control Mode (SDO).
4	DEC2/SDI	DI	Master Mode Decimation Ratio Selection Input 2 in Pin Control Master Mode (DEC2). Tie this pin to IOVDD or to IOGND to set the output data rate. See the Programming Output Data Rate and Clock section for more details. Serial Data Input in SPI Control Mode (SDI).
5	DEC1/DCLKMODE	DI	Decimation Ratio Selection Input 1 in Pin Control Master Mode (DEC1). Tie this pin to IOVDD or to IOGND to set the output data rate. See the Programming Output Data Rate and Clock section for more details. DCLK Mode Control in Pin Control Slave Mode and in SPI Control Mode (DCLKMODE). Tie this pin high to IOVDD to set DCLK to operate in free running mode. Tie this pin low to ground to set DCLK to operate in gated mode.

Pin No.	Mnemonic	Type[1]	Description
6	DEC0/DCLKIO	DI	Decimation Ratio Selection Input 0 in Pin Control Master Mode (DEC0). Tie this pin to IOVDD or to IOGND to set the output data rate. See the Programming Output Data Rate and Clock section for more details. DCLK Pin I/O Direction Control in Pin Control Slave Mode and in SPI Control Mode (DCLKIO). In master mode, tie this pin to IOVDD to configure DCLK as an output. In slave mode, tie this pin low to ground to set DCLK as an input. When the DEC1/DCLKMODE pin is high (DCLK is in free running mode), the DCLKIO input is ignored and the DCLK direction is always the same as the ODR pin.
7	DOUT3	DO	Data Output 3. The output data is synchronous to DCLK and framed by the ODR pin.
8	DOUT2	DO	Data Output 2. The output data is synchronous to DCLK and framed by the ODR pin.
9	DOUT1	DO	Data Output 1. The output data is synchronous to DCLK and framed by the ODR pin.
10	DOUT0	DO	Data Output 0. The output data is synchronous to DCLK and framed by the ODR pin.
11	DCLK	DI/O	ADC Conversion Data Clock. Conversion data on the DOUT0 pin to the DOUT3 pin is clocked out synchronously by DCLK. In pin control master mode, DCLK is configured as an output operating in gated mode. In pin control slave mode or in SPI control mode, the DCLK direction and mode of operation are determined by the DEC1/DCLKMODE pin and DCLKIO pin. Refer to Table 29 for details. In master mode, DCLK frequency is programmable through DCLKRATEx in pin control mode or the DATA_PACKET_CONFIG register in SPI control mode.
12	ODR	DI/O	Output Data Rate Control and Framing. The frequency of the ODR signal matches the ADC output data rate. The edges of the ODR signal can be used to frame the conversion output data bit steam. In master mode, the ODR pin is configured as an output with the pin-programmable and register-programmable frequency derived from the device master clock. In slave mode, the ODR pin is configured as an input to allow the external clock to control the ADC output data rate.
13	IOVDD	P	Digital I/O Supply. This pin sets the logic levels for all interface I/O pins.
14	IOGND	GND	I/O Interface Ground Reference.
15	FILTER0/GPIO4	DI/O	Digital Filter Type Selection Input 0 in Pin Control Mode (FILTER0). Tie this pin to IOVDD or to IOGND to select the digital filter options. See the Programming Digital Filter section for more details. General-Purpose Input/Output 4 in SPI Control Mode (GPIO4).
16	FILTER1/GPIO5	DI/O	Digital Filter Type Selection Input 1 in Pin Control Mode (FILTER1). Tie this pin to IOVDD or to IOGND to select the digital filter options. See the Programming Digital Filter section for more details. General-Purpose Input/Output 5 in SPI Control Mode (GPIO5).
17	FRAME0/GPIO6	DI/O	Conversion Output Data Frame Control Input 0 in Pin Control Mode (FRAME0). Tie this pin to IOVDD or to IOGND to select the conversation output data frame. See the Data Frame section for more details. General-Purpose Input/Output 6 in SPI Control Mode (GPIO6).
18	FRAME1/GPIO7	DI/O	Conversion Output Data Frame Control Input 1 in Pin Control Mode (FRAME1). Tie this pin to IOVDD or to IOGND to select the conversation output data frame. See the Data Frame section for more details. General-Purpose Input/Output 7 in SPI Control Mode (GPIO7).
19	DGND1V8	GND	Ground Reference for Digital Supply Voltage, 1.8 V.
20	DVDD1V8	P	Digital Supply Voltage, 1.8 V. The pin is supplied from an external source or the internal LDO regulator. In either case, a decoupling capacitor of 10 µF is required between DVDD1V8 and DGND1V8.
21	AVDD1V8	P	Analog Supply Voltage 1.8 V. The pin is supplied from an external source or the internal LDO regulator. In either case, a decoupling capacitor of 10 µF is required between AVDD1V8 and AGND1V8.
22	AGND1V8	GND	Ground Reference for Analog Supply Voltage, 1.8 V.
23	LDOIN	P	Input for Three Internal 1.8 V LDO Regulators Powering AVDD1V8, DVDD1V8, and CLKVDD. Tie this pin to DVDD1V8 if an external power supply is used to power AVDD1V8, DVDD1V8, and CLKVDD. A 10 µF decoupling capacitor is required between LDOIN and DGND1V8. See the On-Board LDO Regulators section for more details.
24	DGND5	GND	Ground Reference for Digital Supply Voltage, 5 V.
25	DVDD5	P	Digital Supply Voltage, 5 V. A decoupling capacitor of 10 µF is required between DVDD5 and DGND5.
26	AVDD5	P	Analog Supply Voltage, 5 V. A decoupling capacitor of 10 µF is required between AVDD5 and AGND5.
27	AGND5	GND	Ground Reference for Analog Supply Voltage, 5 V.
28	DNC	DNC	Do Not Connect. Do not connect to this pin.
29	AIN0+	AI	Positive Analog Input to ADC Channel 0.
30	AIN0−	AI	Negative Analog Input to ADC Channel 0.
31	AGND5	GND	Ground Reference for Analog Supply Voltage, 5 V.
32	AIN1+	AI	Positive Analog Input to ADC Channel 1.
33	AIN1−	AI	Negative Analog Input to ADC Channel 1.

Pin No.	Mnemonic	Type[1]	Description
34	VCM	AO	Common-Mode Voltage Output. The VCM output can be used to provide a common-mode voltage for the analog front-end circuit. The VCM pin provides a buffered voltage output. The level is fixed to 1/2 of the voltage on the REFCAP pin in pin control mode, and is programmable in SPI control mode. When driving capacitive loads larger than 0.2 nF, it is recommended to place a 50 Ω series resistor between the pin and the capacitive load for stability.
35	REFIN	AI	ADC Reference Filter Input. Use an internal 20 Ω resistor together with an external capacitor on the REFCAP pin to filter the reference source noise.
36	REFCAP	AO	ADC Reference Direct Input. Connect this pin to the external reference source for a direct reference input. Alternatively, connect the reference source to the REFIN pin and place a filter capacitor between the REFCAP pin and REFGND pin to limit the reference noise bandwidth. See the Reference Input section for more details.
37	REFGND	GND	ADC Reference Ground Reference.
38	AIN2+	AI	Positive Analog Input to ADC Channel 2.
39	AIN2−	AI	Negative Analog Input to ADC Channel 2.
40	AGND5	GND	Ground Reference for Analog Supply Voltage, 5 V.
41	AIN3+	AI	Positive Analog Input to ADC Channel 3.
42	AIN3−	AI	Negative Analog Input to ADC Channel 3.
43	CLKGND	GND	Clock Management Circuit Ground Reference.
44	CLKVDD	P	Clock Management Circuit Power Supply, 1.8 V. This pin is supplied from an external source or internal LDO regulator. In either case, a decoupling capacitor of 2.2 µF is required between the CLKVDD pin and CLKGND pin.
45	XTAL2/CLKIN	DI	Input 2 for Internal Crystal Oscillator (XTAL2). Connect an external crystal between the XTAL1 pin and XTAL2/CLKIN pin for on-chip clock generation. Clock Input (CLKIN). For operations using an external clock signal, connect this pin to the external clock source. See the Clock Input section for more details.
46	XTAL1	DI	Input 1 for Internal Crystal Oscillator. Connect an external crystal between the XTAL1 pin and XTAL2/CLKIN pin for on-chip clock generation. Leave this pin floating if the device is to operate from a single-ended external clock signal.
47	CLKSEL	DI	Clock Source Selection Input. Connect this pin to IOVDD to enable on-chip clock generation from an external crystal. Connect this pin to IOGND if the clock signal is provided externally on the XTAL2/CLKIN pin.
48	XCLKOUT	DO	Crystal Oscillator Buffered Output. A buffered clock signal generated by the internal crystal oscillator is available on this pin. This signal can be used to drive other AD7134 devices working in parallel. The XCLKOUT output is enabled by default in pin control mode only if the crystal clock option is selected. The XCLKOUT output is disabled by default in SPI control mode. See the XCLKOUT Output section for more details.
49	$\overline{\text{PIN}}$/SPI	DI	Device Configuration Mode Control Input. Tie this pin to IOVDD to enable device configuration through register access over the SPI interface. Tie this pin to ground to enable device configuration through the configuration input pins.
50	MODE	DI	ASRC Mode Of Operation Control Input. Tie this pin to IOVDD for master mode operation. Tie this pin to IOGND for slave mode operation.
51	DCLKRATE0/GPIO0	DI/O	DCLK Frequency Control Input 0 in Pin Control Mode (DCLKRATE0). When DCLK is configured as an output, tie this pin to IOVDD or to IOGND to set the frequency ratio between DCLK and the device master clock. See Table 30 for more details. General-Purpose Input/Output 0 in SPI Control Mode (GPIO0).
52	DCLKRATE1/GPIO1	DI/O	DCLK Frequency Control Input 1 in Pin Control Mode (DCLKRATE1). When DCLK is configured as an output, tie this pin to IOVDD or to IOGND to set the frequency ratio between DCLK and the device master clock. See Table 30 for more details. General-Purpose Input/Output 1 in SPI Control Mode (GPIO1).
53	DCLKRATE2/GPIO2	DI/O	DCLK Frequency Control Input 2 in Pin Control Mode (DCLKRATE2). When DCLK is configured as an output, tie this pin to IOVDD or to IOGND to set the frequency ratio between DCLK and the device master clock. See Table 30 for more details. General-Purpose Input/Output 2 in SPI Control Mode (GPIO2).
54	$\overline{\text{RESET}}$	DI	Hardware Asynchronous Reset Input, Active Low. Pull this pin to IOVDD through a 10 kΩ pull-up resistor during normal operation. Pull this pin low to IOGND to force the device into reset. See the Reset section for more details.
55	$\overline{\text{PDN}}$	DI	Full Power-Down Mode Control Input, Active Low. Pull this pin to IOVDD through a 10 kΩ pull-up resistor during normal operation. Pull this pin to IOGND to force the device into full power-down mode. See the Power Modes section for more details.

Pin No.	Mnemonic	Type[1]	Description
56	PWRMODE/GPIO3	DI/O	Power Mode Selection Input in Pin Control Mode (PWRMODE). Tie this pin to IOVDD for high performance mode. Tie this pin to IOGND for low power mode. General-Purpose Input/Output 3 in SPI Control Mode (GPIO3).
	EPAD		Exposed Pad. Connect the exposed pad to AGND5.

[1] DI is digital input, DI/O is bidirectional digital input/output, DO is digital output, P is power, GND is ground, DNC is do not connect, AI is analog input, and AO is analog output.

TYPICAL PERFORMANCE CHARACTERISTICS

V_{REF} = 4.096 V, AA1 mode, V_{CM} = 2.048 V, wideband 0.433 × ODR filter, high performance mode, wideband filter plots at ODR = 374 kSPS, sinc3 and sinc6 plots at ODR = 1496 kSPS, unless otherwise noted.

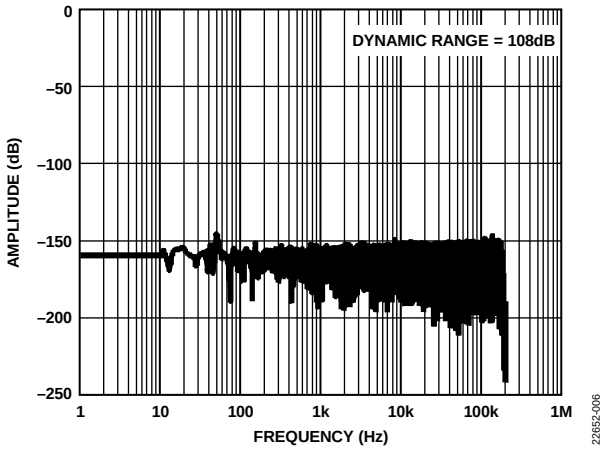

Figure 6. Dynamic Range Performance, High Performance Mode, Wideband 0.433 Hz × ODR Filter, ODR = 374 kSPS

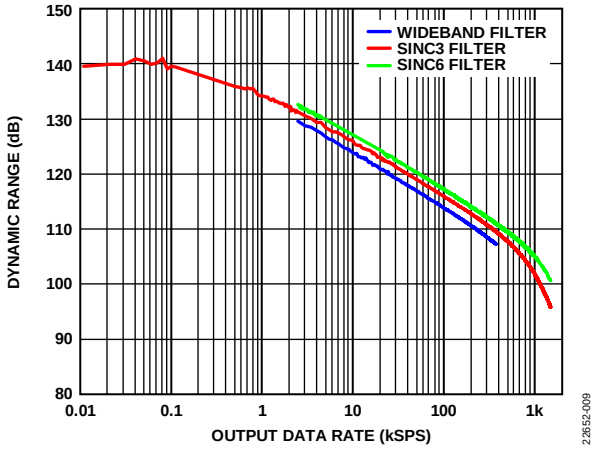

Figure 7. Dynamic Range vs. Output Data Rate in High Performance Mode for Wideband FIR, Sinc3 and Sinc6 Filters

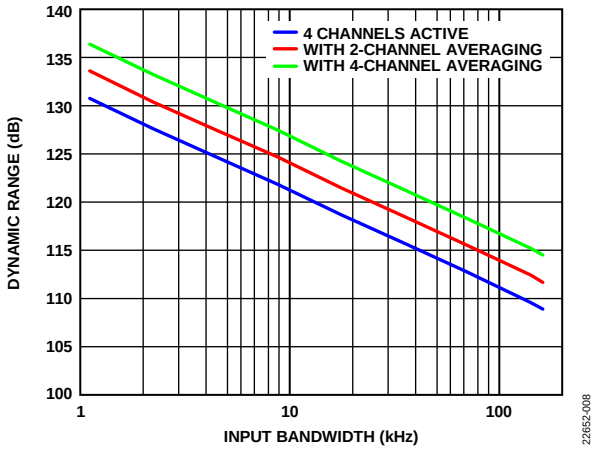

Figure 8. Dynamic Range vs. Input Bandwidth, Wideband 0.433 Hz × ODR Filter

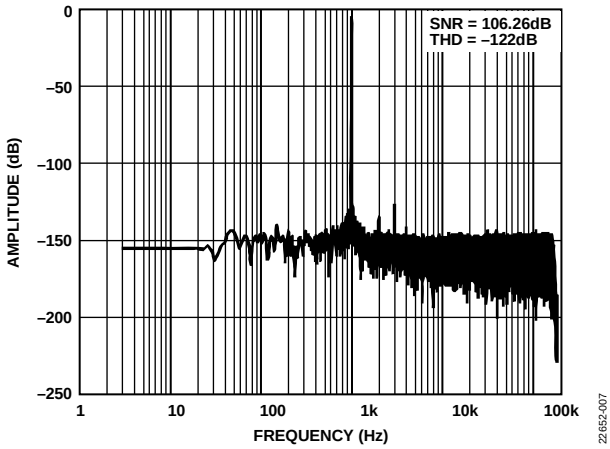

Figure 9. FFT, High Performance Mode, –0.5 dBFS, Wideband 0.433 Hz × ODR Filter, ODR = 374 kSPS

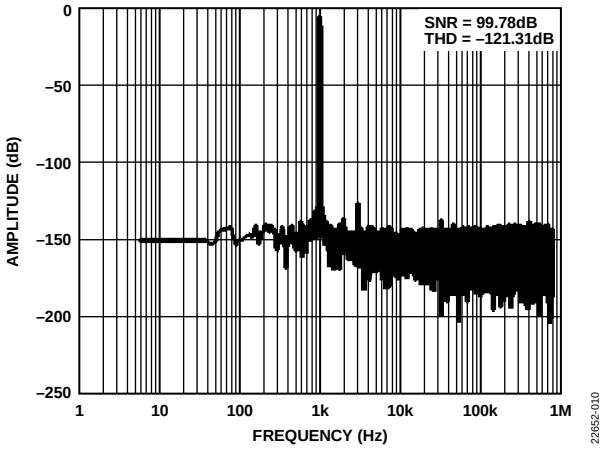

Figure 10. FFT, High Performance Mode, Sinc6 Filter, –0.5 dBFS, ODR = 1496 kSPS

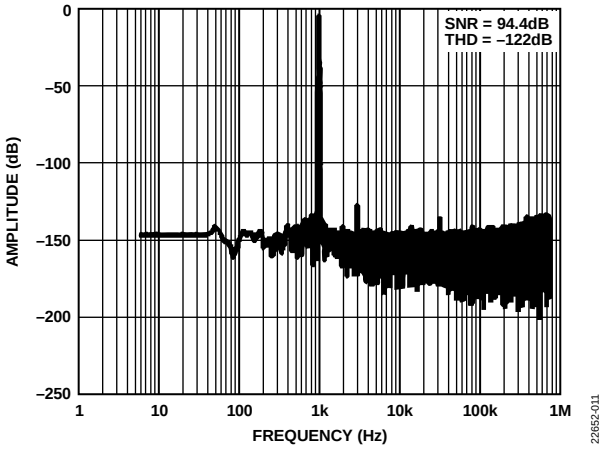

Figure 11. FFT, High Performance Mode, Sinc3 Filter, –0.5 dBFS, ODR = 1496 kSPS

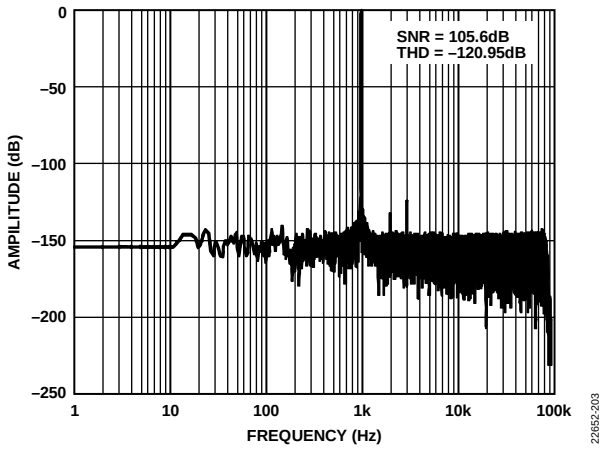

Figure 12. FFT, Low Power Mode, Wideband 0.433 × ODR Filter, −0.5 dBFS, ODR = 187 kSPS

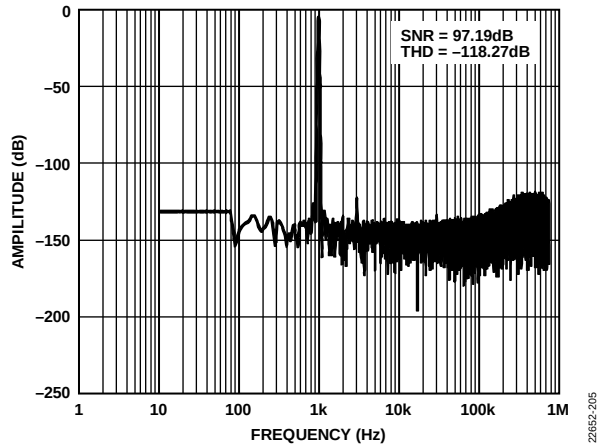

Figure 13. FFT, Low Power Mode, Sinc6 Filter, −0.5 dBFS, ODR = 750 kSPS

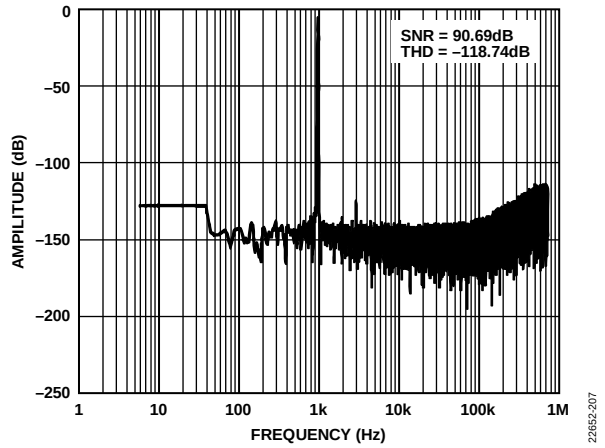

Figure 14. FFT, Low Power Mode, Sinc3 Filter, −0.5 dBFS, ODR = 750 kSPS

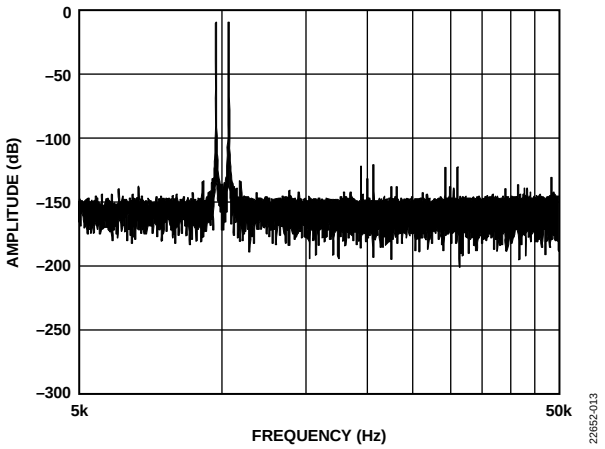

Figure 15. IMD with Input Signals at 9.7 kHz and 10.3 kHz, Wideband 0.433 × ODR Filter

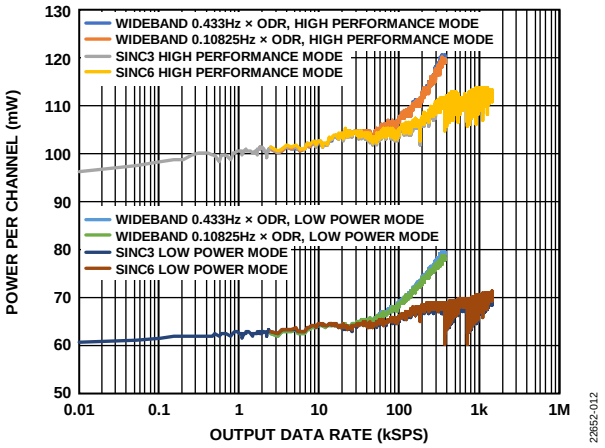

Figure 16. Power per Channel vs. Output Data Rate

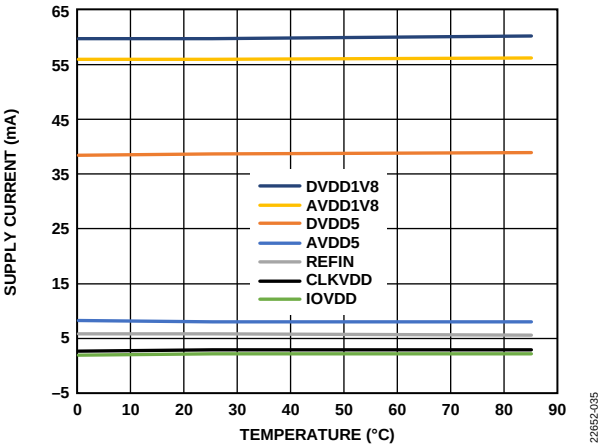

Figure 17. Supply Current vs. Temperature, Wideband 0.433 Hz × ODR Filter

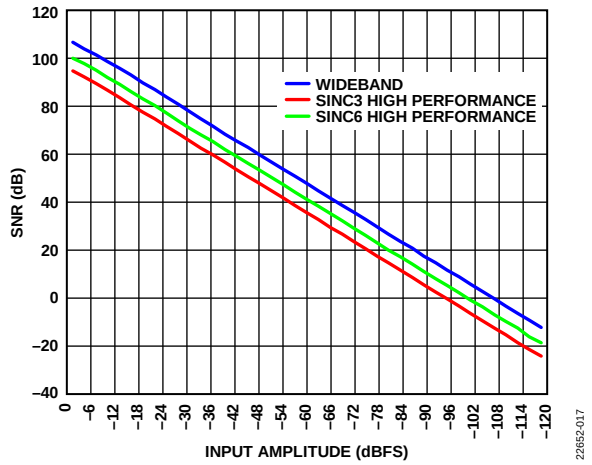

Figure 18. SNR vs. Input Amplitude, Tone at 1 kHz

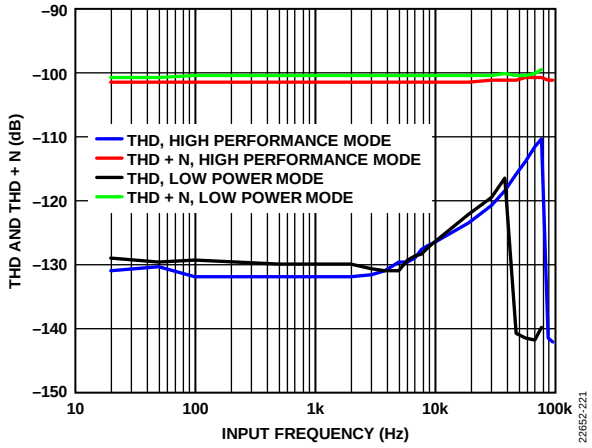

Figure 19. THD and THD + N vs. Input Frequency, −6 dBFS Input, 0.433 × ODR Filter

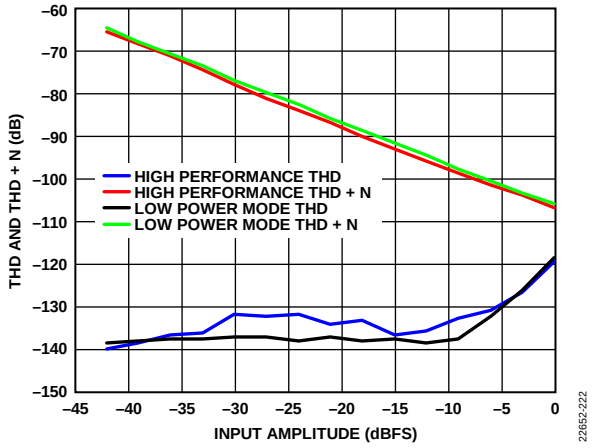

Figure 20. THD and THD + N vs. Input Amplitude, Wideband Filter, Tone at 1 kHz

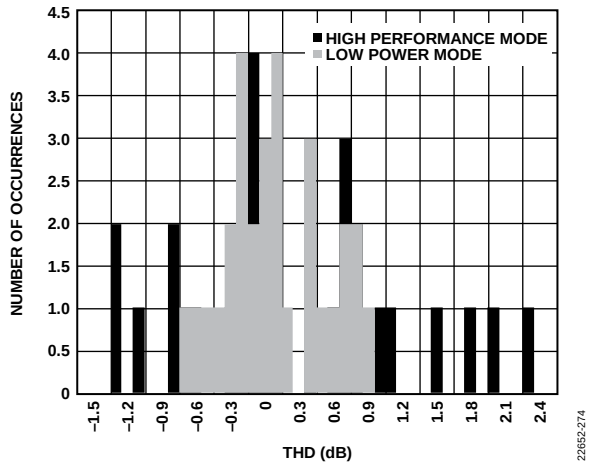

Figure 21. THD Histogram

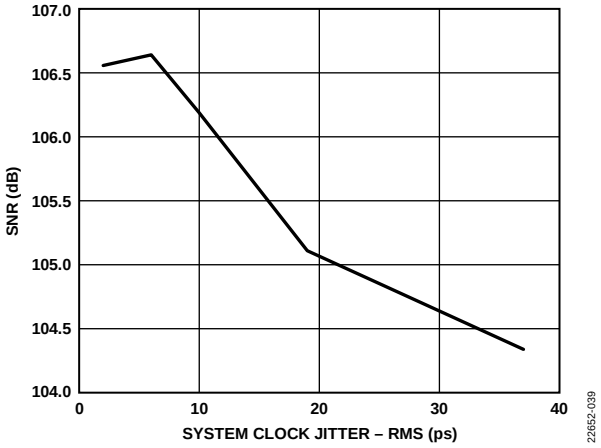

Figure 22. SNR vs. System Clock Jitter, Wideband 0.433 Hz × ODR Filter

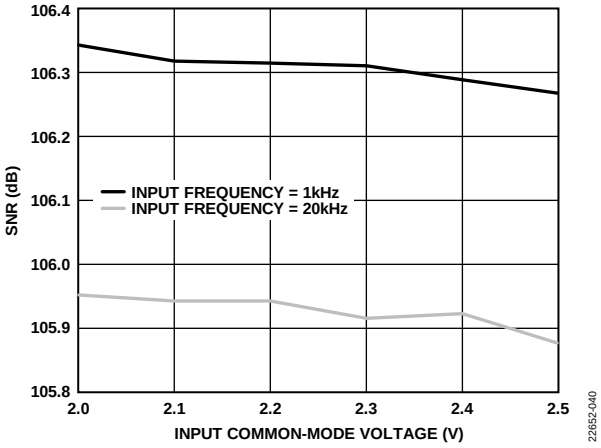

Figure 23. SNR vs. Input Common-Mode Voltage, Wideband 0.433 Hz × ODR Filter

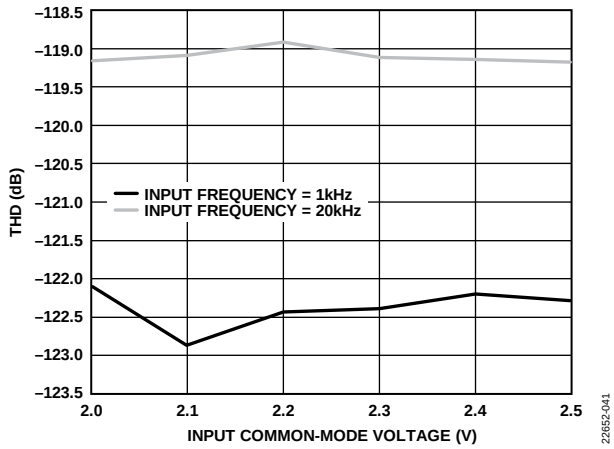

Figure 24. THD vs. Input Common-Mode Voltage, 0.5 dBFS Input Tone, Wideband 0.433 Hz × ODR Filter, Full-Scale Input Tone

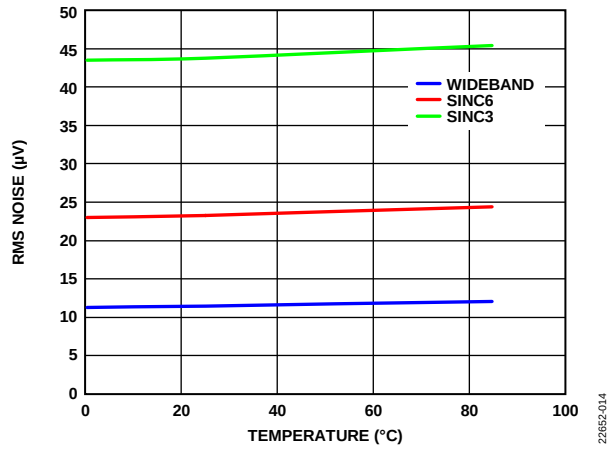

Figure 25. RMS Noise vs. Temperature, for Wideband 0.433 Hz × ODR, Sinc6 and Sinc3 Filters

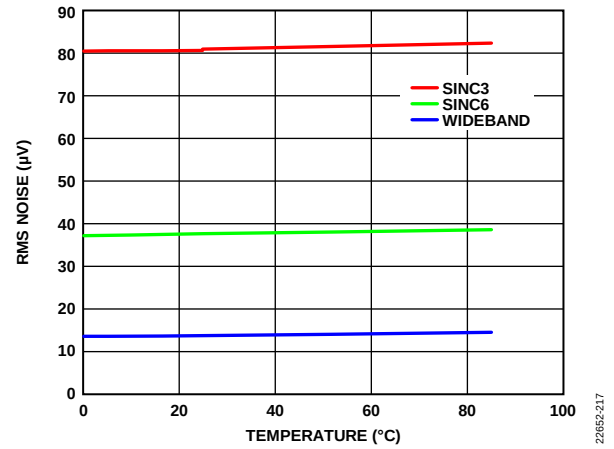

Figure 26. RMS Noise vs. Temperature, Low Power Mode for Wideband 0.433 × ODR Filter, Sinc6, Sinc3

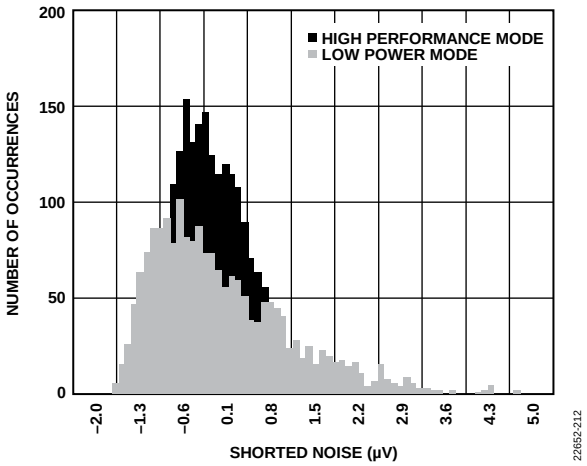

Figure 27. Shorted Noise, 0.433 × ODR Filter

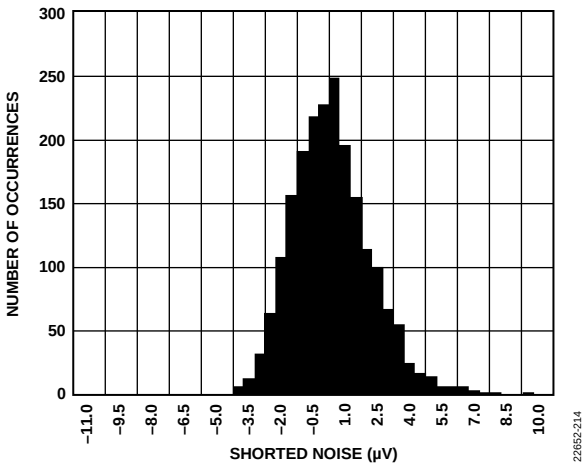

Figure 28. Shorted Noise, Sinc3 Filter

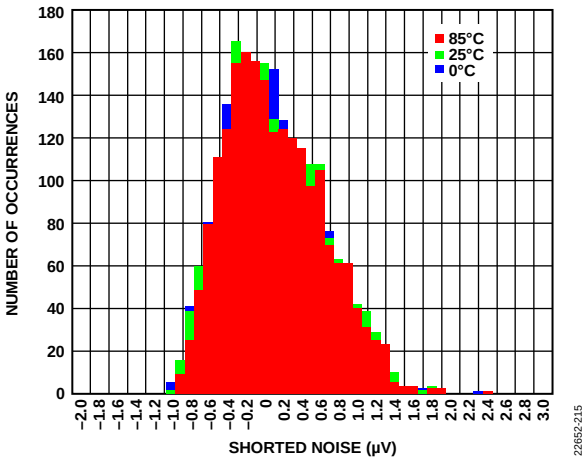

Figure 29. Shorted Noise Histogram, 0.433 × ODR Filter at Different Temperatures

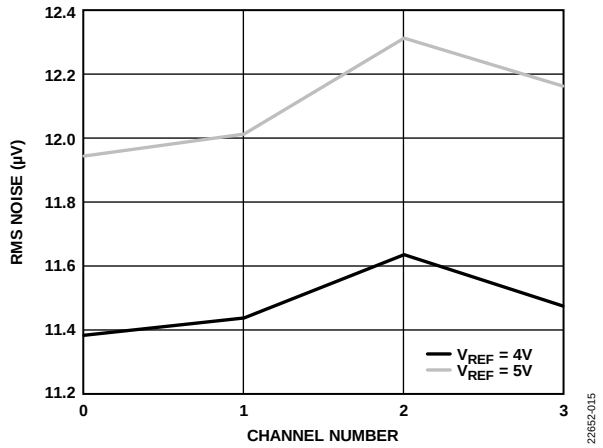

Figure 30. RMS Noise per Channel for Various V_{REF} Values, Wideband 0.433 × ODR Filter

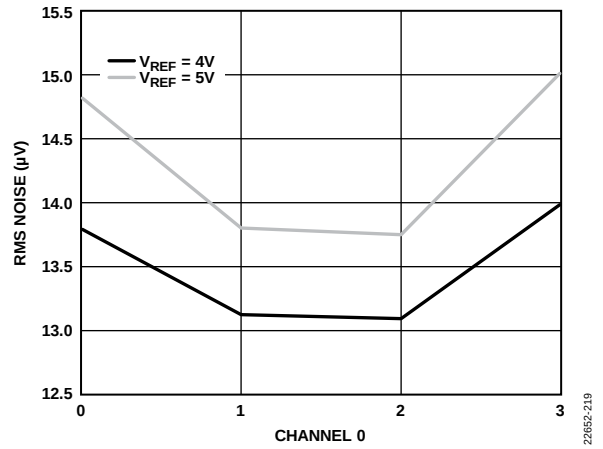

Figure 31. RMS Noise per Channel for Various V_{REF} Values, Low Power Mode

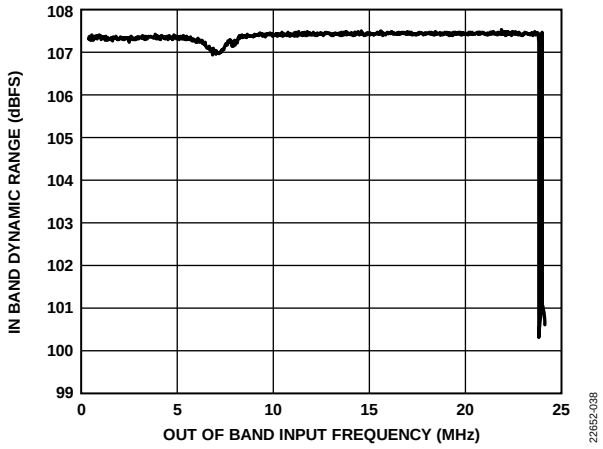

Figure 32. In Band Dynamic Range vs. Out of Band Input Frequency of 1 V p-p Input Signal Wideband 0.433 Hz × ODR Filter

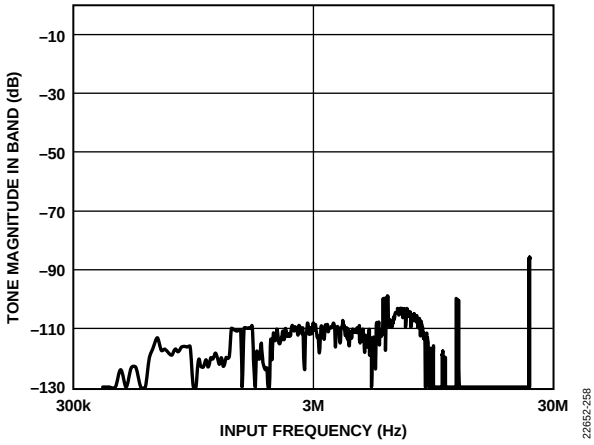

Figure 33. Tone Magnitude In Band vs. Input Frequency

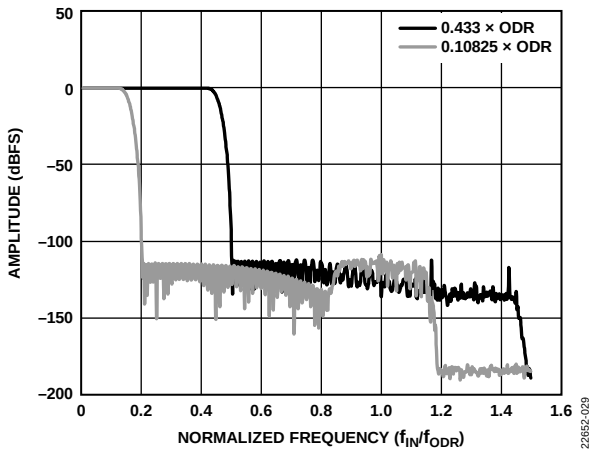

Figure 34. Amplitude vs. Normalized Frequency (f_{IN}/f_{ODR})

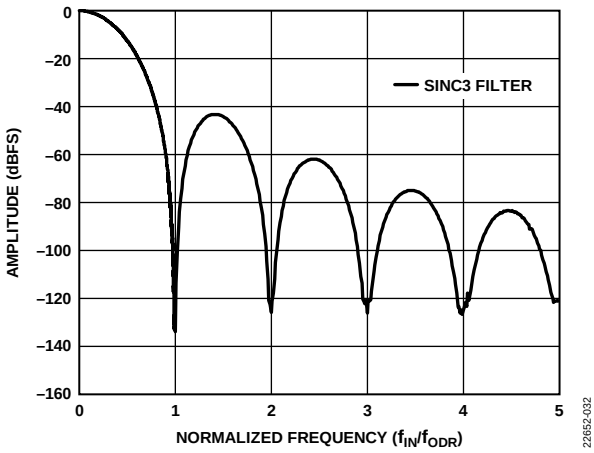

Figure 35. Amplitude vs. Normalized Frequency (f_{IN}/f_{ODR}), Sinc Filter Profile

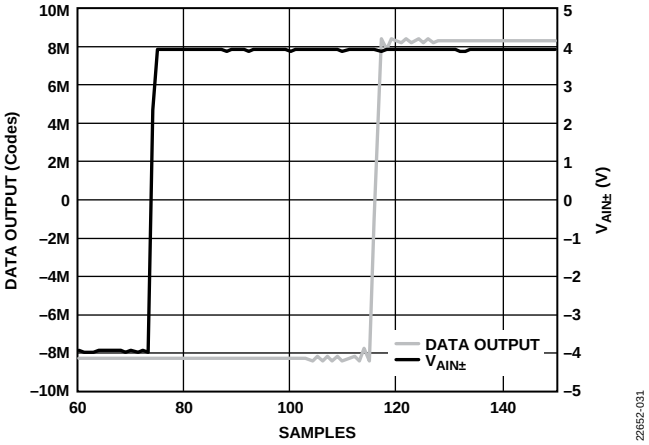

Figure 36. Step Response, Wideband Filter

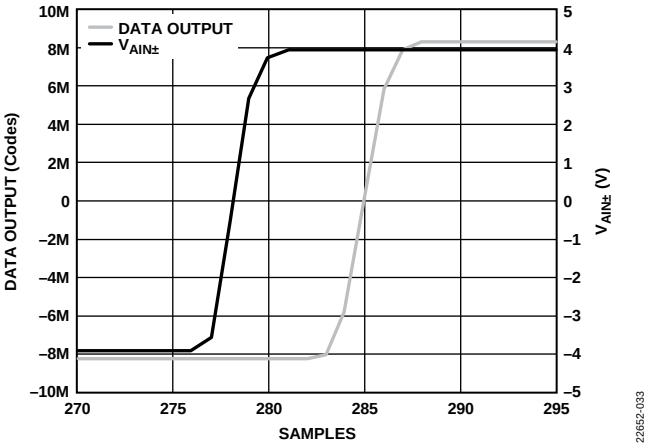

Figure 37. Step Response, Sinc3 Filter

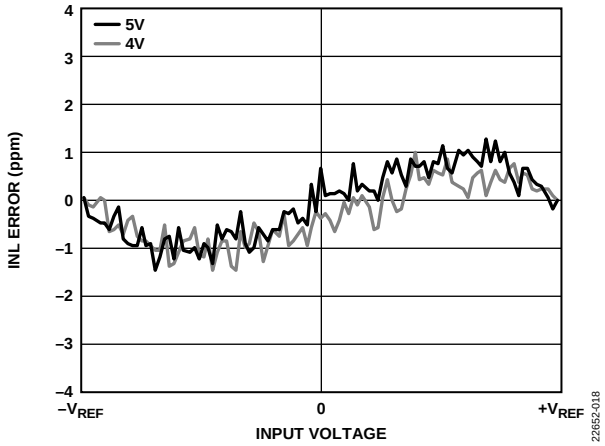

Figure 38. INL Error vs. Input Voltage, Wideband 0.433 × ODR Filter

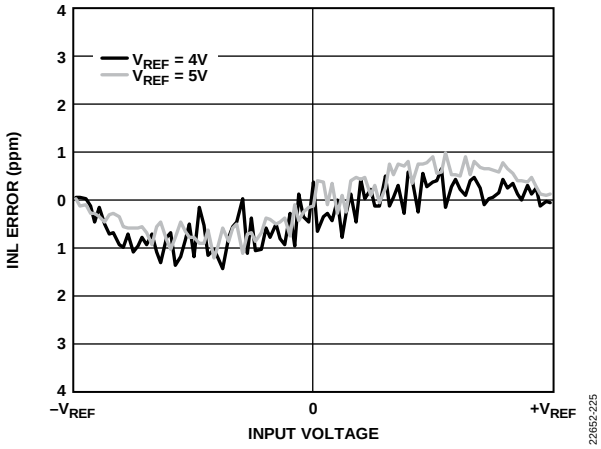

Figure 39. INL Error vs. Input Voltage for Various V_{REF} Levels, Low Power Mode

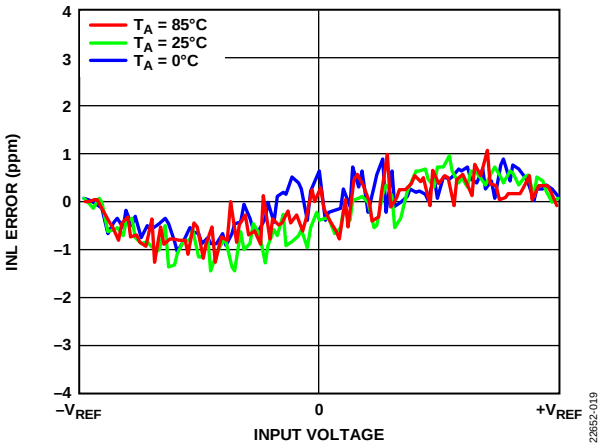

Figure 40. INL Error vs. Input Voltage, Wideband 0.433 × ODR Filter

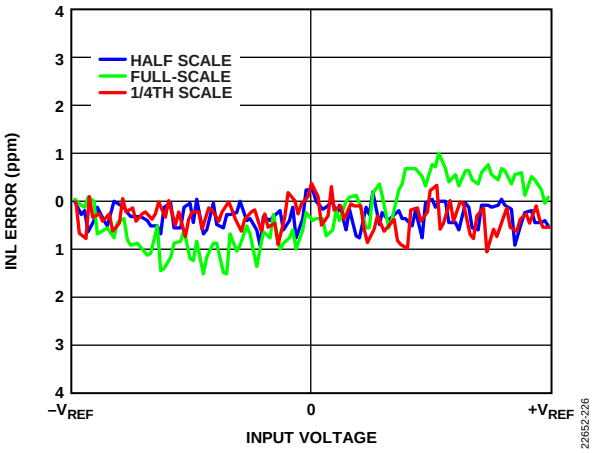

Figure 41. INL Error vs. Input Voltage, Full-Scale, Half Scale, and Quarter Scale Inputs

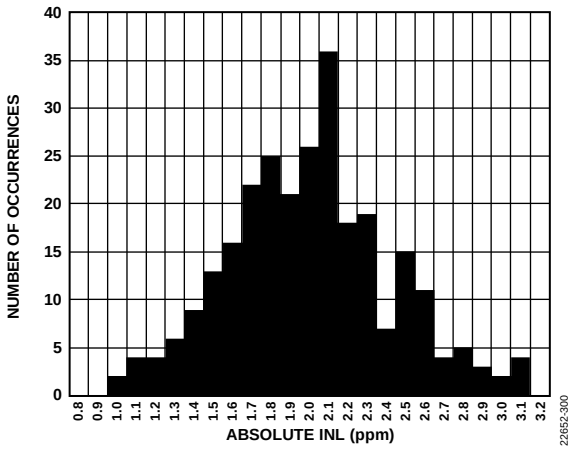

Figure 42. INL Distribution

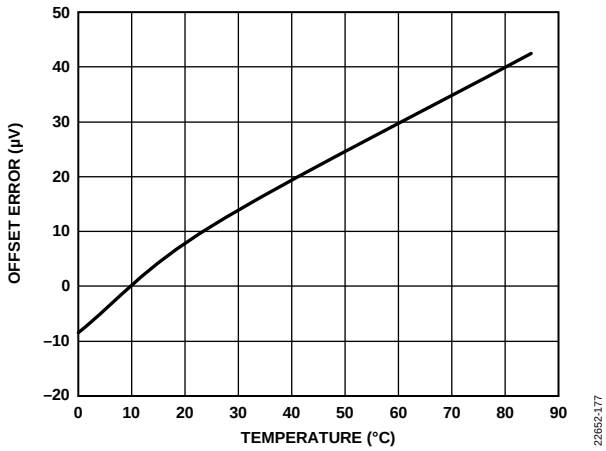

Figure 45. Offset Error vs. Temperature

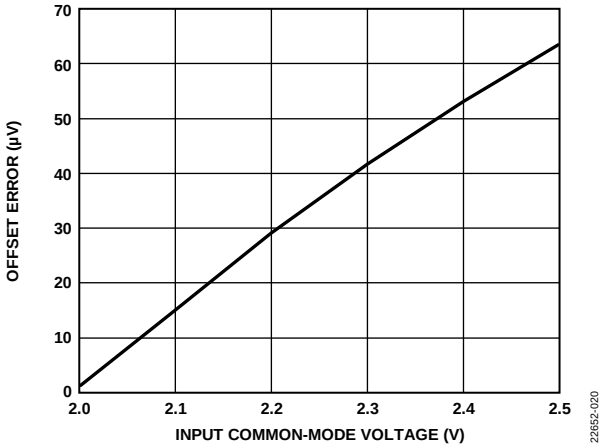

Figure 43. Offset Error vs. Input Common-Mode Voltage, Wideband 0.433 Hz × ODR Filter

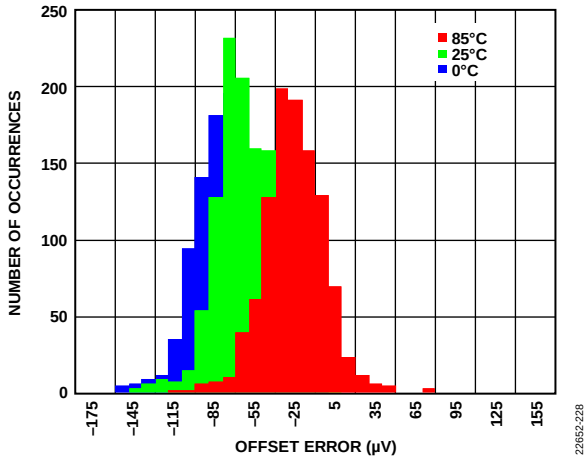

Figure 46. Offset Error Distribution, High Performance Mode

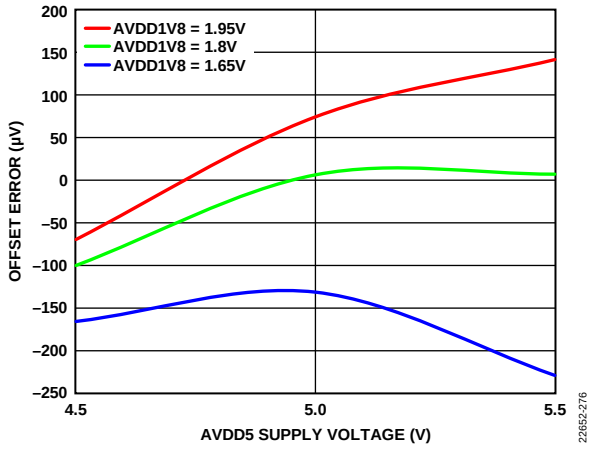

Figure 44. Offset Error vs. AVDD5 Supply Voltage

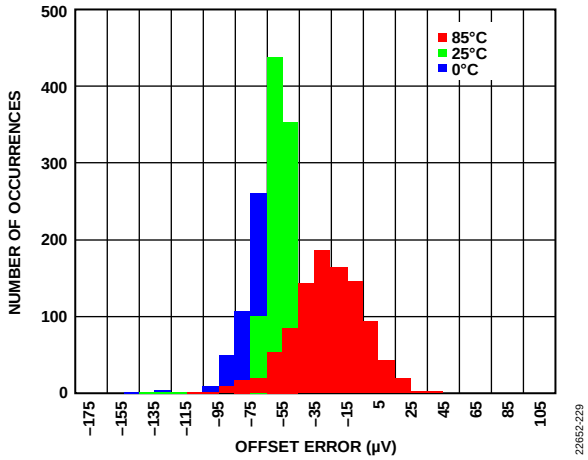

Figure 47. Offset Error Distribution, Low Power Mode

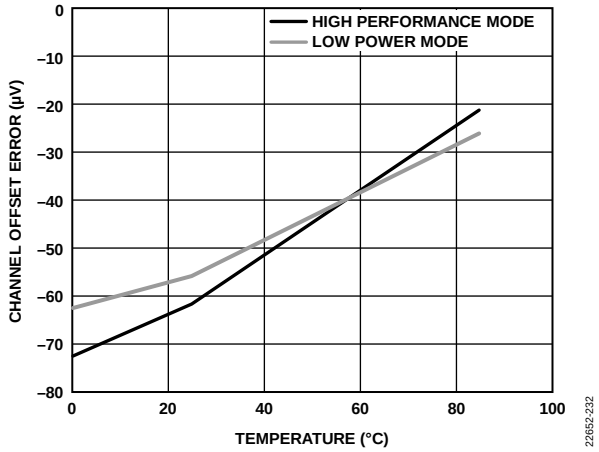

Figure 48. Channel Offset Error Matching

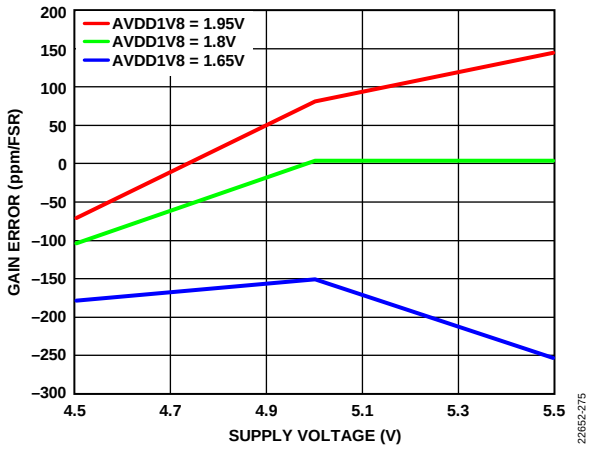

Figure 51. Gain Error vs. Supply Voltage

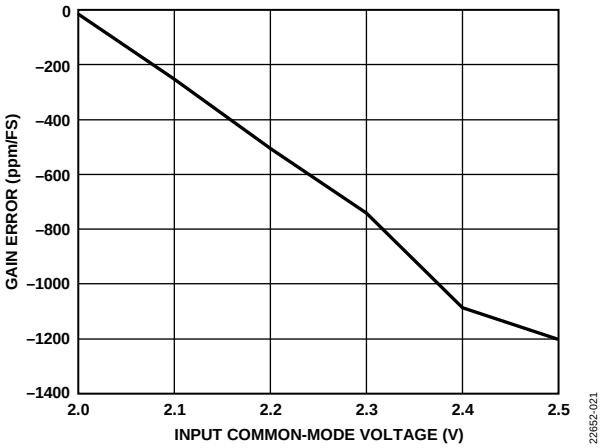

Figure 49. Gain Error vs. Input Common-Mode Voltage, Wideband 0.433 × ODR Filter

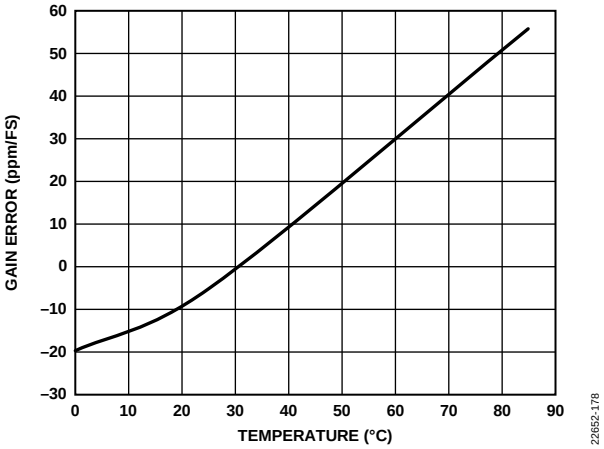

Figure 52. Gain Error vs. Temperature

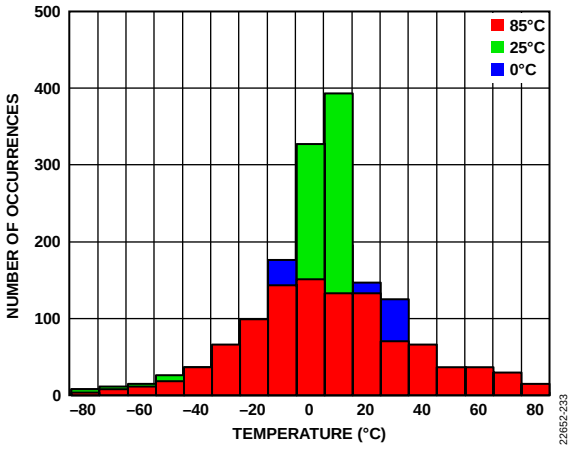

Figure 50. Gain Error Distribution

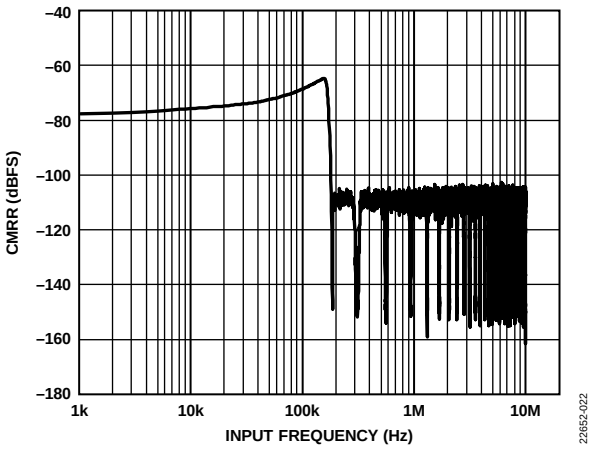

Figure 53. CMRR vs. Input Frequency, Wideband 0.433 × ODR Filter

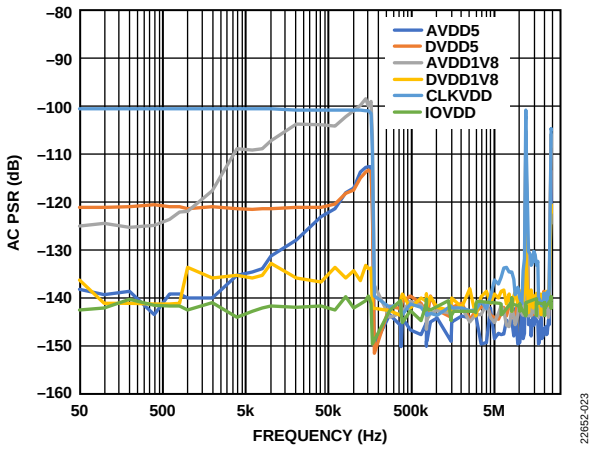

Figure 54. AC Power Supply Rejection (PSR) vs. Frequency, Wideband 0.433 × ODR Filter

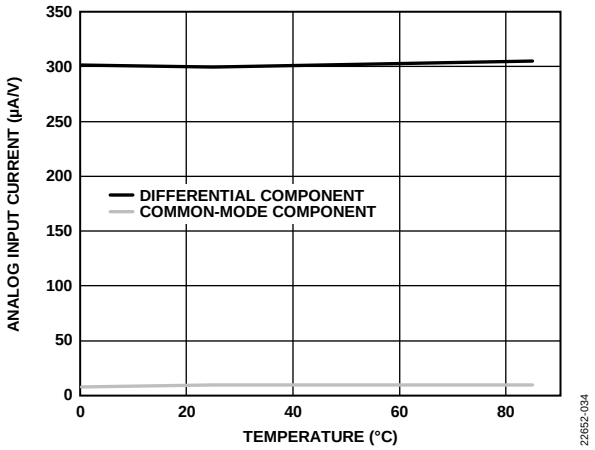

Figure 55. Analog Input Current vs. Temperature, Wideband 0.433 Hz × ODR Filter

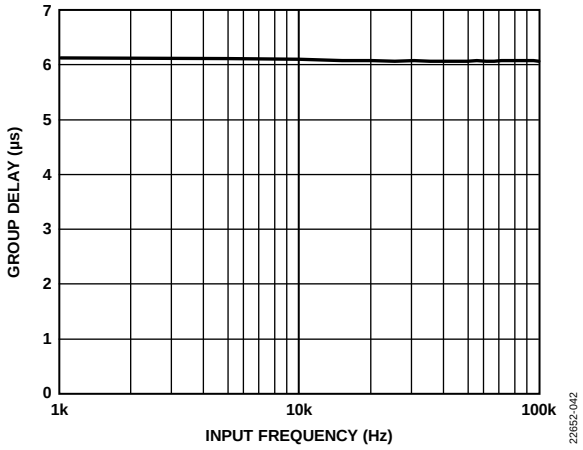

Figure 56. Group Delay vs. Input Frequency, Sinc3 Filter ODR = 1250 kSPS

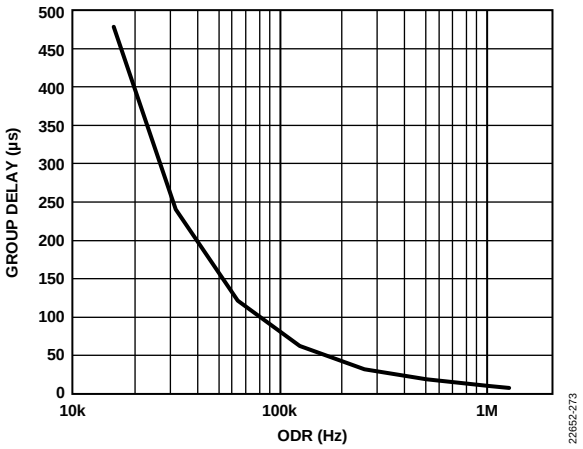

Figure 57. Group Delay vs. ODR, Sinc3 Filter

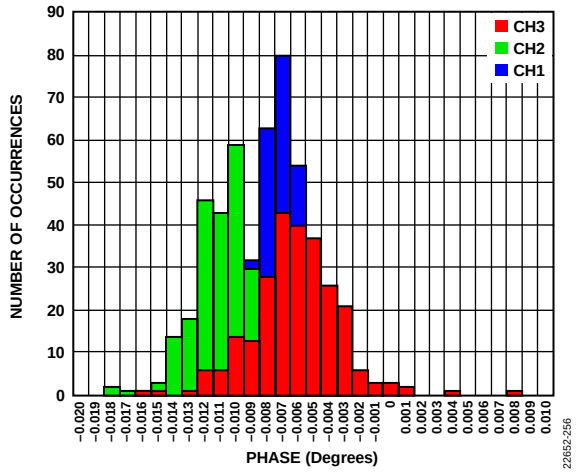

Figure 58. Channel Phase Matching Distribution for Input Tone at 20 kHz

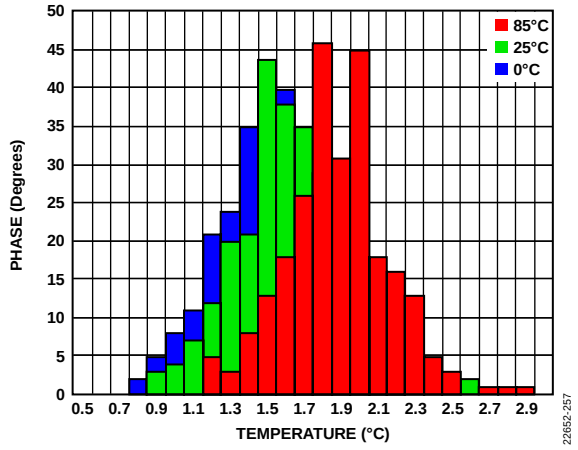

Figure 59. Channel Phase Matching vs. Temperature

TERMINOLOGY

AC Common-Mode Rejection Ratio (CMRR)

AC CMRR is defined as the ratio of the power in the ADC output at frequency, f, to the power of a 100 mV p-p sine wave applied as the common-mode voltage to the AINx+ pin and AINx− pin at sampling frequency (f_S).

$$AC\ CMRR\ (\text{dB}) = 10 \log(Pf/Pf_S)$$

where:
Pf is the power at frequency, f, in the ADC output.
Pf_S is the power at frequency, f_S, in the ADC output.

Integral Nonlinearity (INL) Error

INL error refers to the deviation of each individual code from a line drawn from negative full scale through positive full scale. The point used as negative full scale occurs ½ LSB before the first code transition. Positive full scale is defined as a level 1½ LSB beyond the last code transition. The deviation is measured from the middle of each code to the true straight line.

Intermodulation Distortion

With inputs consisting of sine waves at two frequencies, fa and fb, any active device with nonlinearities creates distortion products at the sum and difference frequencies of mfa and nfb, where m, n = 0, 1, 2, 3, and so on. Intermodulation distortion terms are those for which neither m nor n is equal to 0. For example, the second-order terms include (fa + fb) and (fa – fb), and the third-order terms include (2fa + fb), (2fa – fb), (fa + 2fb), and (fa – 2fb).

The AD7134 is tested using the International Telephonic Consultative Committee (CCIF) standard, where two input frequencies near to each other are used. In this case, the second-order terms are usually distanced in frequency from the original sine waves, and the third-order terms are usually at a frequency close to the input frequencies. As a result, the second-order and third-order terms are specified separately. The calculation of the intermodulation distortion is as per the THD specification, where it is the ratio of the rms sum of the individual distortion products to the rms amplitude of the sum of the fundamentals expressed in decibels.

Gain Error

The first transition (from 100 … 000 to 100 …001) occurs at a level ½ LSB above nominal negative full scale (−4.0959375 V for the ±4.096 V range). The last transition (from 011 … 110 to 011 … 111) occurs for an analog voltage 1½ LSB below the nominal full scale (+4.0959375 V for the ±4.096 V range). The gain error is the deviation of the difference between the actual level of the last transition and the actual level of the first transition from the difference between the ideal levels.

Gain Drift

Gain drift is the ratio of the gain error change due to a temperature change of 1°C and the full-scale range (2^N). Gain drift is expressed in parts per million.

Least Significant Bit (LSB)

The least significant bit, or LSB, is the smallest increment that can be represented by a converter. For a fully differential input ADC with N bits of resolution, the LSB expressed in volts is

$$LSB = 2 \times \frac{V_{REFCAP}}{2^N}$$

where:
V_{REFCAP} is the voltage measured on the REFCAP pin.
N = 24 for the AD7134.

DC Power Supply Rejection Ratio (DC PSRR)

Variations in power supply affect the full-scale transition but not the linearity of the converter. DC PSRR is the maximum change in the full-scale transition point due to a change in power supply voltage from the nominal value.

AC Power Supply Rejection (AC PSR)

AC PSR is the amplitude of the tone observed when a 100 mV p-p signal is injected on the supply.

For example, if a 100 mV p-p signal injected on the supply at a frequency of 1 kHz and a −108 dB tone is observed at 1 kHz in the FFT output, then −108 dB is the ac power supply rejection.

Alias Rejection

Alias rejection is defined as the ratio of the power in the ADC output at frequency, f_{IN}, to the power of a −6 dBFS input signal at frequency, MCLK ± f_{IN}.

$$Alias\ rejection = 10 \log(Pf_{IN}/PMCLK \pm f_{IN})$$

where:
Pf_{IN} is the power at frequency, f_{IN}, in the ADC output.
$PMCLK \pm f_{IN}$ is the power at frequency, MCLK ± f_{IN}, in the ADC output.

Group Delay

Group delay is defined as the difference of phase delays measured at the ADC output and full-scale sine wave ADC input.

Signal-to-Noise Ratio (SNR)

SNR is the ratio of the rms value of the actual input signal to the rms sum of all other spectral components below the ODR/2 frequency, excluding harmonics and dc. The value for SNR is expressed in decibels.

Signal-to-Noise-and-Distortion Ratio (SINAD)

SINAD is the ratio of the rms value of the actual input signal to the rms sum of all other spectral components below the ODR/2 frequency, including harmonics but excluding dc. The value for SINAD is expressed in decibels.

Spurious-Free Dynamic Range (SFDR)

SFDR is the difference, in decibels, between the rms amplitude of the input signal and the peak spurious signal (excluding the first five harmonics).

Total Harmonic Distortion (THD)
THD is the ratio of the rms sum of the first five harmonic components to the rms value of a full-scale input signal and is expressed in decibels.

Offset Error
Offset error is the difference between the ideal midscale input voltage (0 V) and the actual voltage producing the midscale output code.

Offset Error Drift
Offset error drift is the ratio of the offset error change due to a temperature change of 1°C. For this calculation, observe the change in output code when the temperature varies over the full range and take the ratio. Offset error drift is expressed in microvolts per degree Celsius.

Crosstalk
Crosstalk is measured as tone amplitude observed at Frequency X on Channel 1 when Channel 0 and Channel 2 are driven simultaneously with a full-scale tone at Frequency X.

THEORY OF OPERATION

Figure 60 illustrates a simplified signal path of one of the four Σ-Δ ADC channels of the AD7134. In a typical operation, the CTSD modulator oversamples the analog input signal at the modulator sampling frequency at MCLK. The ADC quantization noise is modulated to the higher frequency band during this process. The oversampled modulator output is then decimated through an ASRC and digital filter. The decimation removes the additional bandwidth caused by oversampling along with the shaped quantization. The result is a high precision data output from the digital filter at the user defined ODR.

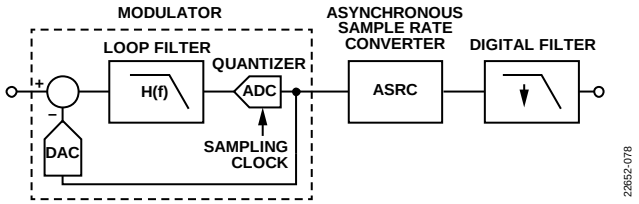

Figure 60. Signal Path Overview

CONTINUOUS TIME SIGMA-DELTA MODULATOR

Almost all of the contemporary precision ADCs are designed with a switched capacitor-based sample-and-hold circuit. The sample-and-hold circuit is an essential part of the successive approximation register (SAR) ADC architecture, for example, where it is used to reduce the aperture time and maintain a steady input level during conversion. The discrete time Σ-Δ ADCs also use the sample-and-hold circuit in both the input path and the feedback loop, which simplifies the design. Because the analog input signal is converted to a discrete time signal by the sample-and-hold circuit, the ADCs with the sample-and-hold circuit are also known as discrete time ADCs.

The sample-and-hold circuit offers many benefits to the ADC design. However, some side effects of using the sample-and-hold circuit, such as charge kickback and signal aliasing, require additional effort in designing the ADC into a system.

The CTSD modulator employs the same Σ-Δ modulation principle, such as oversampling and noise shaping, as the discrete time sigma-delta (DTSD) modulator, with the key difference being the CTSD does not use the sample-and-hold circuit.

The CTSD modulator design used on the AD7134 uses both a continuous time integrator and a continuous time DAC. This architecture offers some unique system benefits to the precision data acquisition systems design over the discrete time ADCs.

EASY TO DRIVE INPUT AND REFERENCE

The switching action of the sample-and-hold circuit used on the discrete time ADCs creates disturbances on the input node. There are two main impacts of the disturbance. The first is the sudden loading of the input node by the sampling capacitor, for which the magnitude of the disturbance is proportional to the input differential voltage/differential time. The second impact is from the charges stored in the parasitic capacitance of the switches being pushed out to the input node when the switch is closed, a phenomenon known as charge injection or charge kickback. In either case, the sudden change of current flow at the input of the ADC reacts with the finite impedance of the driving circuit to create a disturbance in the form of voltage variation. The profile of the variation depends on the bandwidth and the impedance of the driving circuit.

To achieve the required level of accuracy, at the end of each sampling period, the disturbed input signal must settle to the actual source value within 1 LSB of the ADC target effective resolution, which is particularly challenging with a higher precision or higher input bandwidth requirement.

A common solution to overcome the input settling challenge is to buffer the input with a high bandwidth amplifier with high output driving capability, as shown in Figure 61.

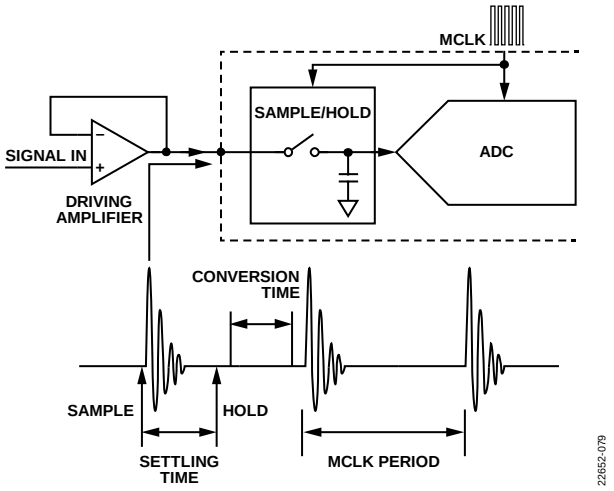

Figure 61. Driving the Input of a Discrete Time ADC

The sample-and-hold circuit is also used by the discrete time ADC on the reference input. A high bandwidth amplifier is also required to drive the ADC reference input.

The drawbacks of using an ADC driving amplifier include the following:

- The amplifier bandwidth must be much higher than the input signal bandwidth, leading to higher power consumption
- The additional components in the signal chain lead to more noise and error
- Additional design complexity to ensure stability when driving the dynamic capacitive load of a discrete time ADC

CTSD architecture allows the AD7134 to have a constant resistive input characteristic. This behavior simplifies the front-end circuit design, allowing lower bandwidth, and low power high performance precision amplifiers to directly drive the ADC.

Similarly, due to the continuous time DAC used in the modulator feedback loop, the AD7134 reference input also has a constant resistive input characteristic, making it possible to drive the ADC reference input directly with a voltage reference IC.

INHERENT ANTIALIASING FILTER (AAF)

When sampling an analog sinusoid signal at less than twice of its frequency, reconstruction through interpolation results in a lower frequency signal than the original. This phenomenon is known as aliasing. Figure 62 shows an example of signal aliasing viewed in both the time and frequency domains. The example shows the digital discrete time representations of a 3 kHz, 17 kHz, and 23 kHz signal sampled at 20 kHz are identical. When interpolating the result, the output is always a 3 kHz sine wave, which means that, in this sampling system, the frequency component of the input signal at 17 kHz and 23 kHz appear at 3 kHz in the output.

The aliasing occurs at the point of sampling of the analog signal. The only way to guarantee the matching between input and output signal frequency is to limit the input signal bandwidth before sampling. In the previous example of the frequency component input signal, if the signal is low-pass filtered with a bandwidth of 10 kHz, the interpolated output always matches the filtered input signal. Because the purpose of the low-pass filter is to prevent high frequency signals from aliasing down, the filter is also known as an antialiasing filter.

The signal sampling occurs at the very front of the discrete time ADC in the sample-and-hold circuit. An external antialiasing filter is required in front of the discrete time ADC to protect it against signal aliasing.

The antialiasing filter design requires a fine balance between the aliasing rejection level and the phase and magnitude distortion of the input signal. The extra components also introduce error, noise, and additional power consumption to the signal chain.

Other than being easy to drive, the other major advantage of the CTSD architecture is its inherent antialiasing property. Without the sample-and-hold circuit, the sampling of the analog signal takes place inside the CTSD modulator at the quantizer, after the integrator. This sampling scheme allows the device to take advantage of the low-pass response of the integrator and intrinsically reject signals around the sampling frequency of the modulator. This property provides an inherent aliasing rejection of up to 102.5 dB for the AD7134. As shown in Figure 63, combining the inherent antialiasing response of the CTSD modulator with the low ripple wideband digital filter, the AD7134 is fully protected from the out of band frequency tones.

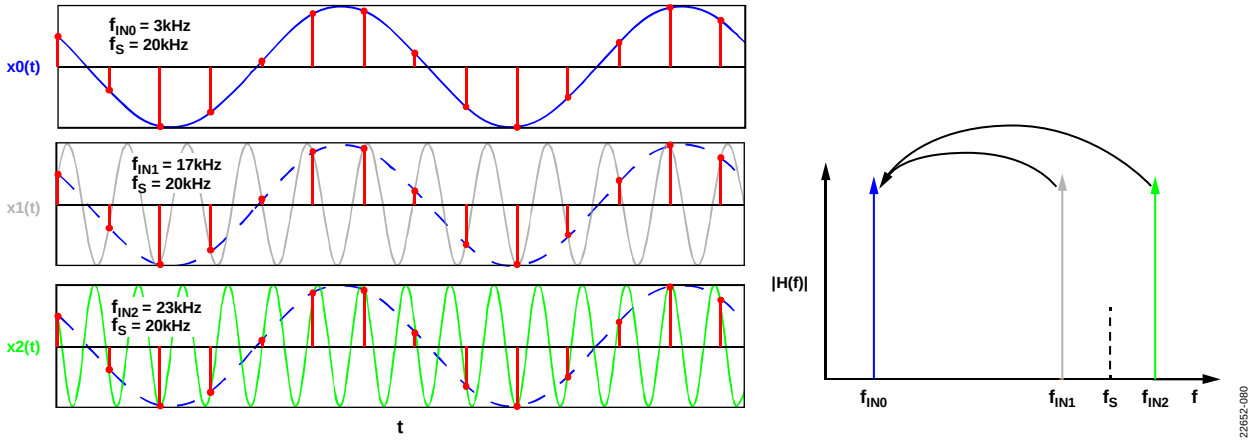

Figure 62. Aliasing Explained with an Example Shown in Both Time and Frequency Domains

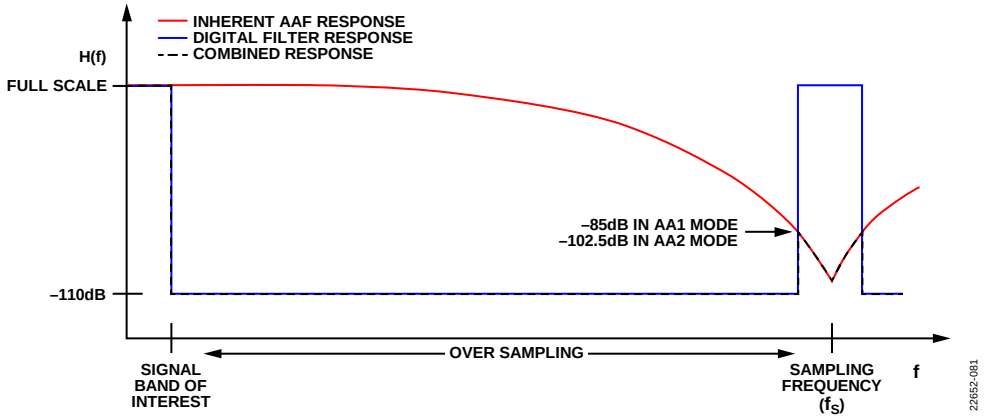

Figure 63. Combined Magnitude Response of the Inherent Antialiasing Filter and the Digital Filter of the AD7134

ANALOG FRONT-END DESIGN SIMPLIFICATION

The result from the two major benefits of the CTSD architecture described in the Easy to Drive Input and Reference section and the Inherent Antialiasing Filter section is a major simplification of the analog front-end design of the precision medium bandwidth data acquisition signal chain.

Figure 64 shows the analog front-end circuit for a discrete time ADC. For discrete time ADC, in between the precision instrumentation amplifier and the ADC is a third-order antialiasing filter plus an ADC driving circuit based on a fully differential ADC driving amplifier. An additional RC circuit is required at the ADC input to ensure stability of the driver and to help further suppress the kickback. A reference driving circuit based on an operation amplifier is placed between the reference IC and the ADC. The circuit incorporates a second-order low-pass filter to help reduce the wideband noise from the reference source.

Figure 65 shows the signal chain of the AD7134. For the continuous time-based AD7134, the easy to drive and inherent antialiasing property results in significant simplification of the analog front-end design. Other than the apparent area and cost saving, the front-end simplification also removes the noise, error, and instability introduced by the removed circuit, improving the overall performance of the signal chain. As shown in Figure 65, the instrumentation amplifier can directly drive the resistive inputs of the AD7134, and the bandwidth of the amplifier adds to the antialias rejection, making the signal chain an alias free signal chain.

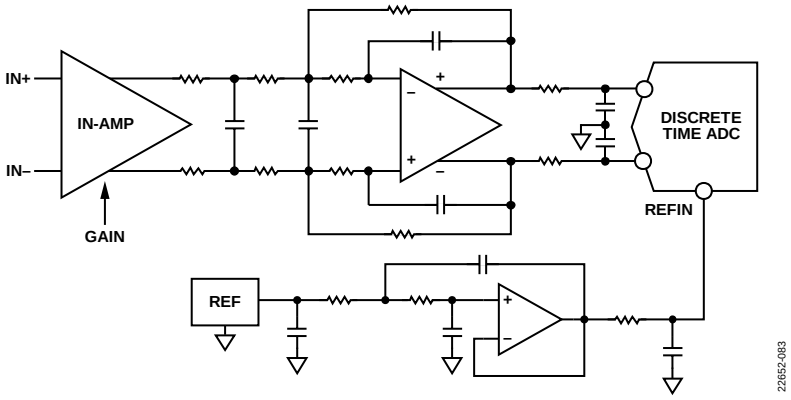

Figure 64. Example Analog Front-End Circuit Design of the Discrete Time-Based ADC

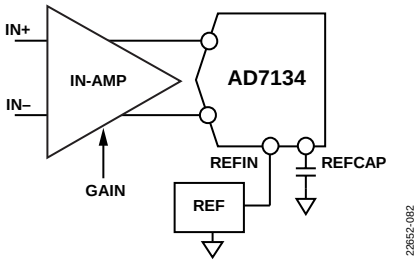

Figure 65. Example Analog Front-End Circuit Design of the AD7134

NOISE PERFORMANCE AND RESOLUTION

Table 9 to Table 16 contain the data of the noise performance for the wideband 0.433 Hz × ODR filter, wideband 0.10825 Hz × ODR filter, sinc6 filter, and the sinc3 digital filter of the AD7134 for various output data rates and channel averaging settings. The noise values and dynamic range specified are typical for the bipolar input range with an external 4.096 V reference (V_{REF}).

The rms noise is measured with shorted analog inputs. The dynamic range is calculated as

$$Dynamic\ Range\ (\text{dB}) = 20\log_{10}((2 \times V_{REF}/2\sqrt{2})/(RMS\ Noise))$$

The LSB size is calculated as follows:

$$LSB\ Size = (2 \times V_{REF})/2^{24}$$

where *LSB Size* is 488 nV with a 4.096 V reference.

Table 9. Wideband 0.433 Hz × ODR Filter, High Performance Mode Noise Performance vs. Output Data Rate (V_{REF} = 4.096 V)

		Single Channel		2:1 Channel Averaging		4:1 Channel Averaging	
Output Data Rate (kSPS)	−3 dB Bandwidth (kHz)	Dynamic Range (dB)	RMS Noise (µV)	Dynamic Range (dB)	RMS Noise (µV)	Dynamic Range (dB)	RMS Noise (µV)
374	161.94	107.21	12.63	110.46	8.68	113.46	6.15
325	140.73	108.09	11.41	111.21	7.96	114.25	5.61
285	123.41	108.65	10.69	111.81	7.43	114.8	5.27
256	110.85	109.21	10.03	112.5	6.87	115.26	4.99
235	101.76	109.71	9.47	112.79	6.63	115.85	4.67
200	86.60	110.58	8.57	113.63	6.02	116.57	4.29
175	75.78	111.12	8.05	114.27	5.6	117.25	3.97
128	55.42	112.72	6.70	115.66	4.77	118.68	3.37
100	43.30	113.71	5.97	116.81	4.17	119.83	2.95
80	34.64	114.80	5.27	117.9	3.68	120.78	2.64
64	27.71	115.83	4.68	118.87	3.29	121.87	2.33
32	13.86	118.91	3.28	121.82	2.34	124.89	1.65
16	6.93	121.94	2.32	124.81	1.66	127.8	1.17
10	4.33	123.80	1.87	126.67	1.34	129.76	0.94
5	2.17	126.68	1.34	129.55	0.96	132.34	0.69
2.5	1.08	129.36	0.99	132.32	0.7	135.08	0.51

Table 10. Wideband 0.433 Hz × ODR Filter, Low Power Mode Noise Performance vs. Output Data Rate (V_{REF} = 4.096 V)

		Single Channel		2:1 Channel Averaging		4:1 Channel Averaging	
Output Data Rate (kSPS)	−3 dB Bandwidth (kHz)	Dynamic Range (dB)	RMS Noise (µV)	Dynamic Range (dB)	RMS Noise (µV)	Dynamic Range (dB)	RMS Noise (µV)
374	161.94	100.42	27.61	103.41	19.55	106.33	13.96
325	140.73	102.03	22.93	105.04	16.21	107.96	11.57
285	123.41	103.21	20.01	106.37	13.9	109.21	10.03
256	110.85	104.08	18.10	107.12	12.75	110.12	9.03
235	101.76	104.67	16.91	107.89	11.68	110.64	8.50
200	86.60	105.80	14.85	108.97	10.31	111.76	7.47
175	75.78	106.64	13.48	109.79	9.37	112.55	6.82
128	55.42	108.29	11.15	111.32	7.87	114.31	5.57
100	43.30	109.49	9.71	112.55	6.83	115.51	4.85
80	34.64	110.58	8.57	113.54	6.09	116.47	4.34
64	27.71	111.63	7.59	114.68	5.34	117.61	3.81
32	13.86	114.72	5.32	117.75	3.75	120.64	2.68
16	6.93	117.69	3.78	120.78	2.64	123.71	1.88
10	4.33	119.73	2.99	122.72	2.11	125.76	1.49
5	2.17	122.79	2.10	125.66	1.50	128.61	1.07
2.5	1.08	125.64	1.51	128.58	1.07	131.48	0.77

Table 11. Wideband 0.10825 Hz × ODR Filter, High Performance Mode Noise Performance vs. Output Data Rate (V_{REF} = 4.096 V)

Output Data Rate (kSPS)	−3 dB Bandwidth (kHz)	Single Channel		2:1 Channel Averaging		4:1 Channel Averaging	
		Dynamic Range (dB)	RMS Noise (µV)	Dynamic Range (dB)	RMS Noise (µV)	Dynamic Range (dB)	RMS Noise (µV)
374	40.49	112.80	6.63	116.03	4.57	119.01	3.24
325	35.18	113.57	6.07	116.84	4.16	119.67	3.00
285	30.85	114.20	5.65	117.37	3.91	120.12	2.85
256	27.71	114.71	5.33	117.63	3.80	120.71	2.66
235	25.44	115.14	5.07	118.13	3.59	121.16	2.53
200	21.65	115.72	4.74	118.88	3.29	121.61	2.40
175	18.94	116.44	4.36	119.62	3.02	122.37	2.20
128	13.86	117.76	3.75	120.88	2.61	123.85	1.86
100	10.83	118.82	3.32	121.9	2.32	124.79	1.66
80	8.66	119.76	2.98	123.06	2.03	125.85	1.47
64	6.93	120.85	2.63	123.78	1.87	126.78	1.32
32	3.46	123.64	1.91	126.56	1.36	129.61	0.95
16	1.73	126.50	1.37	129.30	0.99	132.36	0.69
10	1.08	128.44	1.10	131.23	0.79	134.15	0.56
5	40.49	130.91	0.83	133.54	0.60	136.31	0.44
2.5	35.18	133.59	0.61	136.13	0.45	138.84	0.33

Table 12. Wideband 0.10825 Hz × ODR Filter, Low Power Mode Noise Performance vs. Output Data Rate (V_{REF} = 4.096 V)

Output Data Rate (kSPS)	−3 dB Bandwidth (kHz)	Single Channel		2:1 Channel Averaging		4:1 Channel Averaging	
		Dynamic Range (dB)	RMS Noise (µV)	Dynamic Range (dB)	RMS Noise (µV)	Dynamic Range (dB)	RMS Noise (µV)
374	40.49	108.46	10.94	111.64	7.58	114.53	5.43
325	35.18	109.29	9.94	112.34	6.99	115.20	5.03
285	30.85	110.05	9.11	113.09	6.41	115.90	4.64
256	27.71	110.46	8.69	113.61	6.04	116.42	4.37
235	25.44	110.80	8.35	113.97	5.79	116.96	4.01
200	21.65	111.45	7.75	114.69	5.33	117.66	3.79
175	18.94	112.26	7.06	115.35	4.94	118.24	3.54
128	13.86	113.51	6.12	116.6	4.28	119.63	3.02
100	10.83	114.69	5.34	117.6	3.81	120.61	2.69
80	8.66	115.64	4.78	118.64	3.38	121.76	2.36
64	6.93	116.73	4.22	119.66	3.01	122.54	2.16
32	3.46	119.81	2.96	122.58	2.15	125.64	1.51
16	1.73	122.60	2.15	125.58	1.52	128.61	1.07
10	1.08	124.75	1.68	127.41	1.23	130.45	0.86
5	40.49	127.37	1.24	130.32	0.88	133.14	0.63
2.5	35.18	130.14	0.90	132.99	0.64	135.84	0.46

Table 13. Sinc6 Filter, High Performance Mode Noise Performance vs. Output Data Rate (V_{REF} = 4.096 V)

Output Data Rate (kSPS)	−3 dB Bandwidth (kHz)	Single Channel		2:1 Channel Averaging		4:1 Channel Averaging	
		Dynamic Range (dB)	RMS Noise (µV)	Dynamic Range (dB)	RMS Noise (µV)	Dynamic Range (dB)	RMS Noise (µV)
1496	278.406	100.66	26.85	104.13	18.01	107.07	12.83
1250	232.63	102.98	20.56	106.34	13.95	109.24	10.00
1000	186.10	105.15	16.01	108.48	10.90	111.44	7.75
750	139.58	107.33	12.46	110.57	8.57	113.52	6.10
500	93.05	109.64	9.54	112.87	6.57	115.85	4.66
375	69.79	111.09	8.08	114.27	5.59	117.32	3.94
325	60.48	111.94	7.32	115.02	5.13	118.02	3.63
256	47.64	113.20	6.34	116.20	4.48	119.16	3.19
175	32.57	114.82	5.26	117.97	3.65	120.90	2.61
128	23.82	116.32	4.42	119.35	3.12	122.29	2.22
80	14.89	118.34	3.50	121.50	2.43	124.26	1.77
64	11.91	119.38	3.11	122.36	2.20	125.46	1.54
32	5.96	122.38	2.20	125.33	1.56	128.24	1.12
10	1.86	126.98	1.30	129.87	0.92	132.90	0.65
5	0.93	129.69	0.95	132.47	0.68	135.29	0.49
2.5	0.47	131.97	0.73	135.31	0.49	137.57	0.383

Table 14. Sinc6 Filter, Low Power Mode Noise Performance vs. Output Data Rate (V_{REF} = 4.096 V)

Output Data Rate (kSPS)	−3 dB Bandwidth (kHz)	Single Channel		2:1 Channel Averaging		4:1 Channel Averaging	
		Dynamic Range (dB)	RMS Noise (µV)	Dynamic Range (dB)	RMS Noise (µV)	Dynamic Range (dB)	RMS Noise (µV)
1496	278.406	84.11	180.40	87.30	124.98	90.05	91.06
1250	232.63	87.78	118.22	90.93	82.3	93.92	58.31
1000	186.10	92.28	70.43	95.42	49.04	98.36	34.99
750	139.58	97.65	37.96	100.78	26.48	103.61	19.12
500	93.05	103.33	19.74	106.53	13.65	109.33	9.89
375	69.79	101.17	25.32	103.98	18.32	104.34	17.57
325	60.48	107.19	12.65	110.22	8.93	113.13	6.38
256	47.64	108.60	10.76	111.58	7.63	114.51	5.44
175	32.57	110.53	8.62	113.63	6.03	116.51	4.33
128	23.82	112.05	7.23	115.08	5.10	118.06	3.62
80	14.89	114.25	5.61	117.28	3.96	120.16	2.84
64	11.91	115.17	5.05	118.21	3.56	121.20	2.52
32	5.96	118.22	3.55	121.30	2.49	124.23	1.78
10	1.86	123.03	2.04	126.15	1.42	129.02	1.02
5	0.93	125.99	1.45	129.11	1.01	131.99	0.72
2.5	0.47	128.91	1.04	131.75	0.74	134.57	0.54

Table 15. Sinc3 Filter, High Performance Mode Noise Performance vs. Output Data Rate (V_{REF} = 4.096 V)

Output Data Rate (kSPS)	−3 dB Bandwidth (kHz)	Single Channel		2:1 Channel Averaging		4:1 Channel Averaging	
		Dynamic Range (dB)	RMS Noise (µV)	Dynamic Range (dB)	RMS Noise (µV)	Dynamic Range (dB)	RMS Noise (µV)
1496	391.503	95.32	49.64	98.67	33.74	101.46	24.48
1000	261.70	101.62	24.03	105.05	16.18	107.97	11.56
750	196.28	104.72	16.82	108.01	11.51	110.97	8.19
375	98.14	109.56	9.63	112.64	6.76	115.59	4.81
187.5	49.07	112.88	6.58	116.11	4.53	119.04	3.23
128	33.50	114.76	5.29	117.81	3.72	120.72	2.66
64	16.75	117.83	3.72	120.91	2.60	123.88	1.85
32	8.37	120.91	2.61	124.10	1.80	126.87	1.31
16	4.19	125.74	1.50	128.66	1.06	131.54	0.76
5	1.31	128.29	1.11	131.34	0.78	134.17	0.56
2.5	0.654	130.89	0.83	133.60	0.60	136.30	0.44
1.25	0.327	132.91	0.66	135.52	0.48	138.08	0.36
0.625	0.164	134.66	0.54	137.28	0.39	139.79	0.29
0.06	0.016	137.59	0.38	139.89	0.29	142.62	0.21
0.05	0.013	137.46	0.39	139.49	0.30	141.81	0.23
0.01	0.003	137.22	0.40	140.07	0.28	141.65	0.23

Table 16. Sinc3 Filter, Low Power Mode Noise Performance vs. Output Data Rate (V_{REF} = 4.096 V)

Output Data Rate (kSPS)	−3 dB Bandwidth (kHz)	Single Channel		2:1 Channel Averaging		4:1 Channel Averaging	
		Dynamic Range (dB)	RMS Noise (µV)	Dynamic Range (dB)	RMS Noise (µV)	Dynamic Range (dB)	RMS Noise (µV)
1496	391.503	76.68	424.32	79.72	299.01	82.62	214.21
1000	261.70	85.34	156.58	88.44	109.66	91.26	79.17
750	196.28	91.30	78.89	87.19	126.6	97.41	39.00
375	98.14	98.67	33.77	101.30	24.94	103.42	19.52
187.5	49.07	108.35	11.08	111.42	7.78	114.42	5.50
128	33.50	110.49	8.65	113.50	6.12	116.36	4.40
64	16.75	113.73	5.96	116.70	4.23	119.69	3.00
32	8.37	116.75	4.21	119.73	2.98	122.74	2.11
16	4.19	121.75	2.37	124.65	1.69	127.7	1.19
5	1.31	124.63	1.70	127.59	1.20	130.54	0.86
2.5	0.654	127.47	1.23	130.24	0.89	133.21	0.63
1.25	0.327	130.07	0.91	133.05	0.64	135.59	0.48
0.625	0.164	132.59	0.68	135.23	0.50	137.85	0.37
0.06	0.016	137.95	0.37	140.07	0.28	141.77	0.23
0.05	0.013	137.87	0.37	139.98	0.29	141.97	0.23
0.01	0.003	138.06	0.36	140.67	0.26	141.78	0.23

CIRCUIT INFORMATION

CORE SIGNAL CHAIN

Each ADC channel on the AD7134 has an identical signal path from the analog input pins to the data interface. Each ADC channel has its own CTSD modulator that oversamples the analog input and passes the digital representation to the digital filter block. The data is filtered, scaled for gain and offset (depending on user settings), and then output on the data interface. Control of the flexible settings for the signal chain is provided by either using the pin control or the SPI control set at power-up by the state of the $\overline{\text{PIN}}$/SPI input pin.

The ADC can use up to a 5 V reference and converts the differential voltage between the analog inputs (AINx+ and AINx−) into a digital output. The analog input accepts only differential input. The ADC converts the voltage difference between the analog input pins into a digital code on the output. Using a common-mode voltage of $V_{REF}/2$ for the analog inputs, AINx+ and AINx−, maximizes the ADC input range. The 24-bit conversion result is in twos complement, MSB first format. See Table 17 for more details.

ANALOG INPUTS

Input Structure

Due to the CTSD architecture, the AD7134 has a pure resistive input, with a simplified input structure diagram, as shown in Figure 66. The ADC supports only fully differential input signals. The input impedance has a differential resistance value of 6.25 kΩ. Internally, both AINx+ and AINx− are biased to $V_{REF}/2$ through the internal resistor network. The AD7134 achieves optimal performance with a differential input signal that has a common-mode voltage equal to $V_{REF}/2$. In Figure 66, C_{IN} means input capacitance and R_{IN} means input resistance.

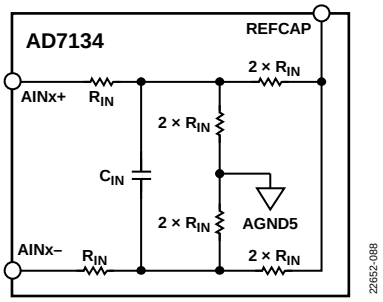

Figure 66. ADC Input Structure

When the device is powered down, with the $\overline{\text{PDN}}$ pin low, in sleep mode, or with the PWRDN_CHx bits, the input behaves with high impedance.

Input Voltage Range

The resistive input structure of the AD7134 allows its input pins to tolerate wide input voltage swings without damaging the device. With the ADC full-scale input being $\pm V_{REF}$, each of the ADC input pins can accept absolute input voltages from 0 V to 5 V.

When the individual ADC input channel is powered down, the input is high impedance.

Input Common-Mode Range

The AD7134 supports an input common-mode range from $V_{REF}/2$ to AVDD5/2. Optimal performance is achieved with the input common-mode level equal to half of the reference input voltage.

VCM OUTPUT

The AD7134 provides a buffered common-mode voltage output on the VCM pin. This output can shift the level of the analog input signals. By incorporating the VCM buffer into the ADC, the AD7134 reduces component count and board space.

In pin control mode, the VCM potential is fixed to $V_{REF}/2$ and is enabled by default.

In SPI control mode, the user has the option to program the VCM output voltage level from $V_{REF}/20$ to $19 \times V_{REF}/20$, or AVDD5/2. The user can also choose to disable the VCM output if not used in SPI control mode.

The VCM output level can be configured through the VCMBUF_REF_DIV_SEL bits and the VCMBUF_REF_SEL bit. The VCM output can be enabled or disabled using the PWRDN_VCMBUF bit. When disabled, the VCM behaves with high impedance.

When driving capacitive loads larger than 0.1 µF, it is recommended to place a 50 Ω series resistor between the VCM pin and the capacitive load to ensure the stability of the output buffer.

Table 17. Output Codes and Ideal Input Voltages

Description	Analog Input (AINx+ − AINx−), V_{REF} = 4.096 V	Digital Output Code, Twos Complement (Hex)
Full Scale (FS) − 1 LSB	4.095999512 V	0x7FFFFF
Midscale + 1 LSB	488 nV	0x000001
Midscale	0 V	0x000000
Midscale − 1 LSB	−488 nV	0xFFFFFF
−FS + 1 LSB	−4.095999512 V	0x800001
−FS	−4.096 V	0x800000

REFERENCE INPUT

Similar to the ADC inputs, the AD7134 reference input is also resistive, which allows the external reference IC to drive the AD7134 directly without the need of a reference buffer. The user can directly connect the external reference source to the REFCAP pin of the AD7134.

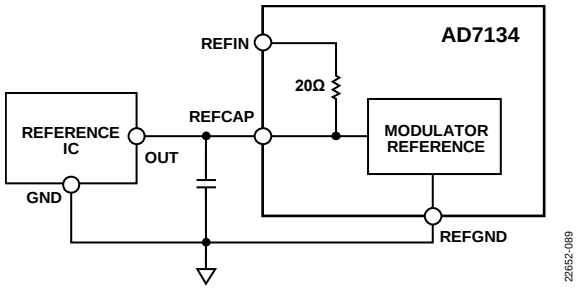

Figure 67. Direct Reference Input Connection to REFCAP Pin

The user can reduce the noise on the reference source by filtering the reference signal. An internal 20 Ω resistor between the REFIN pin and the REFCAP pin enables the user to form a first-order RC filter by connecting a capacitor on the REFCAP pin.

See the Reference Noise Filtering section for examples on how to design the reference filter.

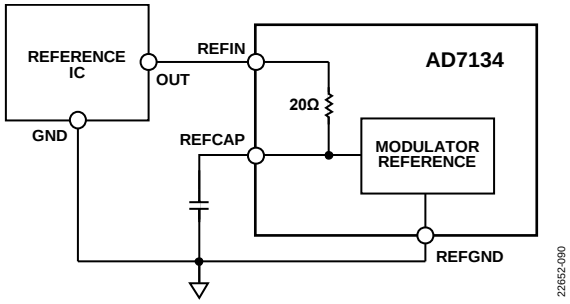

Figure 68. Reference Input Connection Using REFIN Pin

The series resistor creates a small voltage drop that varies with the device mode of operation. In SPI control mode, the user can configure the device to autocorrect this drop in different operating modes by setting the REFIN_GAIN_CORR_EN bit to 1. The reference input current reduces by 1/4 with the disable of each individual ADC channel. This reduction in current is also accounted for with the reference autocorrection function.

The autocorrection function is disabled in pin control mode.

The reference input behaves with high impedance when the device is powered down or in power down mode with the $\overline{\text{PDN}}$ pin low.

CLOCK INPUT

The AD7134 use an internal oscillator during the initial power-up configuration. After the AD7134 has completed the start-up routine, a clock handover to the externally applied CLKIN occurs.

The AD7134 supports two master clock input options. The device can accept an external CMOS clock signal or generate the clock signal using an external crystal. The clock source is determined at power-on by the state of the CLKSEL pin.

Tie the CLKSEL pin to the IOVDD pin and connect an external crystal between the XTAL1 pin and the XTAL2/CLKIN pin to enable the crystal clock option. Tie the CLKSEL pin to the IOGND pin and connect an external CMOS clock signal to the XTAL2/CLKIN pin to enable the CMOS clock option.

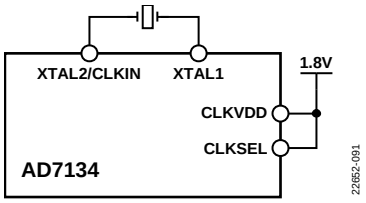

Figure 69. Master Clock Provided by a Crystal

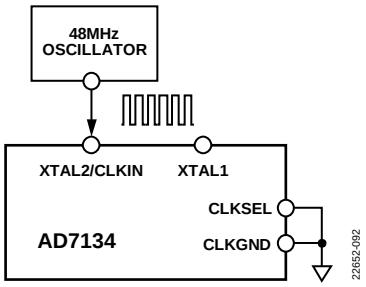

Figure 70. Master Clock Provided by an Oscillator

XCLKOUT OUTPUT

When using the crystal clock option, a buffered output from the internal crystal oscillator can be made available on the XCLKOUT pin. Distribute this CMOS clock signal to other AD7134 devices in the same system to allow multiple AD7134 devices to operate from a single external crystal. The XLKCOUT pin can drive 45 pF of load.

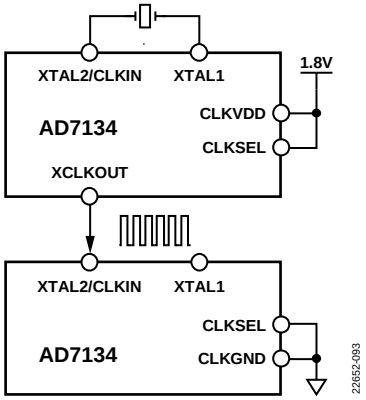

Figure 71. Provide Master Clock to Multiple Devices from a Single Crystal

The XCLKOUT output is enabled by default in pin control mode if the crystal clock options are selected. The XCLKOUT output is disabled in pin control mode if the CMOS clock option is selected.

The XCLKOUT output is disabled by default in SPI control mode and can be enabled by writing 1 to the XCLKOUT_EN bit.

POWER OPTIONS

Operating Power Modes

Depending on the bandwidth of interest for the measurement, the AD7134 allows the user to trade measurement bandwidth with power consumption or resolution through its two selectable power modes: high performance and low power. The low power mode operates with half the modulator clock frequency, resulting in comparable noise performance to the high performance mode at half of the output data rate and 40% of power saving. For details of the performance difference between the two modes, see the Noise Performance and Resolution section.

Channel Power-Down

In SPI control mode, the four ADC channels can be individually powered down to save power when not used.

The PWRDN_CHx bits control the power-down of each channel.

Powering down an ADC channel reduces the supply current and the input current. The input of a powered down channel goes high-Z. The reference input current reduces by 1/4 with the power-down of each ADC channel.

Sleep Mode

Sleep mode can be activated in SPI control mode by setting the SLEEP_MODE_EN bit to 1.

In this mode, the device powers down all the blocks except the digital LDO regulator and it retains its on-chip register values.

The typical power consumption in this mode is 15 mW. The device can resume full operation within 100 µs after exiting this mode.

Both the reference input and input channels go high-Z in sleep mode.

Full Power-Down

The full power-down mode is activated by holding the $\overline{\text{PDN}}$ pin low. All internal blocks are powered down in this mode.

The typical power consumption in this mode is 1 mW. The device requires a power-up time of 10 ms after exiting this mode. After exiting this mode, the device registers are reset to the default value.

Both the reference input and input channels go high-Z in sleep mode.

RESET

When reset, the AD7134 restores the internal register values to the default and resets the internal logics and functional blocks.

Two methods exist for the user to reset the AD7134: through a hard reset by pulling the $\overline{\text{RESET}}$ pin low, or through a software reset by writing 1 to SOFT_RESET (self clears).

ASYNCHRONOUS SAMPLE RATE CONVERTER

One unique property of the CTSD modulator architecture is having a fixed time constant. As a result, the AD7134 device operates at a fixed modulator clock frequency.

To facilitate the accurate adjustment of the output data rate, the AD7134 features a digitally programmable ASRC.

The ASRC is placed between the modulator and the digital filter of each ADC channel. The ASRC has the following two inputs:

- Data that comes at the MCLK rate from the modulator
- ODR input, which is either an external asynchronous signal (slave) or a fractional value (master)

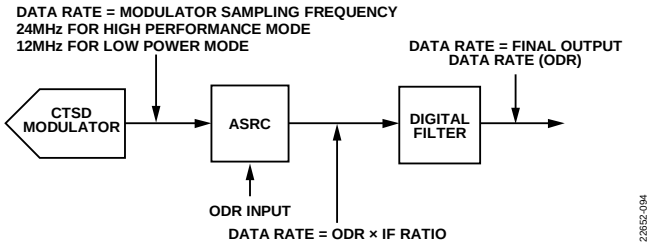

Figure 72. Data Rate at Each Stage of Conversion Path

The digital PLL present in the ASRC block tracks and locks on the ODR input and generates a fractional ratio. The ASRC works through interpolation and resampling of the modulator output at a fractional ratio to the sampling frequency of the modulator.

The interpolation factor depends on the ODR selected. The fractional sample rate conversion of the ASRC allows the final ODR to be asynchronous to the sampling clock of the modulator.

The output of the ASRC is then decimated by an integer in the digital filter to produce the final ODR.

The ASRC only response depends on the ODR selected and has a notch at the value of interpolation factor × ODR frequency. The interpolation factor values for the various ODRs are shown in Table 18.

Table 18. Interpolation Factor Values for Different ODR Ranges

ODR Range	Interpolation Factor Value
750 kSPS to 1.496 MSPS	8
375 kSPS to 749.999 kSPS	16
366.99 SPS to 374.999 kSPS	32
10 SPS to 366.99 SPS	1024

For example, the ASRC response for an ODR of 374 kSPS shows a notch at 32 × 374 kHz = 11.968 MHz, as shown in Figure 73.

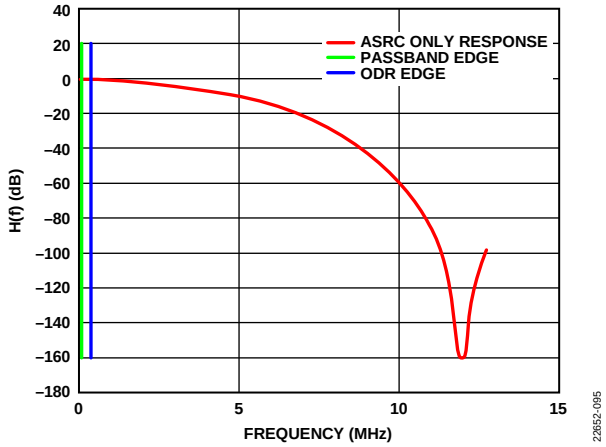

Figure 73. ASRC Only Response for ODR = 374 kSPS

Similarly, the ASRC response for an ODR of 1496 kSPS shows a notch at 8 × 1496 kHz = 11.968 MHz, as shown in Figure 74.

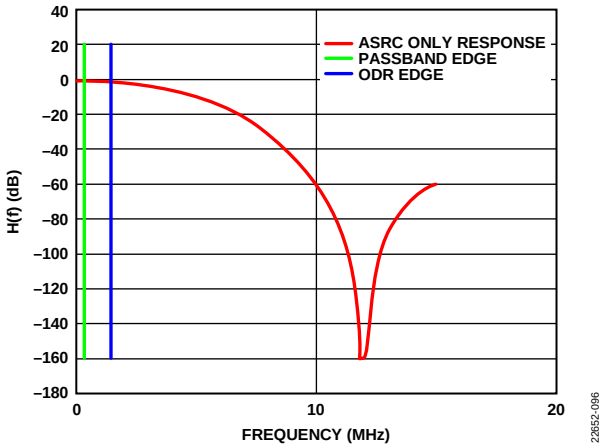

Figure 74. Response for ODR of 1496 kSPS

The available output data rate range varies based on the digital filter type and the ASRC mode selected (see the Digital Filters section for more information).

The ASRC on the AD7134 has the following two modes of operation:

- In master mode, the ODR pin is output and the ODR is set through the pin configuration or a register write.
- In slave mode, the ODR pin is input to the AD7134 and the ODR is set with an external clock source.

ASRC Master Mode

In master mode, the ASRC resamples the interpolated modulator output at a fixed ratio to the modulator clock (see Figure 75). The ratio is internally calculated based on the user setting of the final ODR. The user can configure the ODR through configuration of the ODR pin in pin control mode or through register configuration in SPI control mode.

In ASRC master mode, the ODR pin behaves as an output. It produces a pulse train signal in the frequency of the output data rate. The ADC output data is made available for sampling with respect to the ODR signal.

For details of the ASRC master mode output data rate setting, see the ASRC Master Mode section.

ASRC Slave Mode

In slave mode, the ODR pin behaves as an input (see Figure 76). The user sets the ODR by providing a clock or pulse train at the desired ODR frequency (f_{ODR}) to the ODR pin. The AD7134 measures the ODR frequency using the input signal rising edge. An internal digital PLL tracks the ODR pin input signal frequency and uses it to set the resampling rate of the ASRC. The ADC output data is made available for sampling with respect to the ODR signal.

The user must provide continuous cycles of the ODR signal until the PLL is locked by checking the STAT_PLL_LOCK bit and then reading the data. Any change in the ODR value causes the PLL to unlock and lock back again and requires a wait time before reading data.

The user must also ensure that the jitter on the ODR pin is not more than 100 ns p-p to ensure that the performance is not degraded.

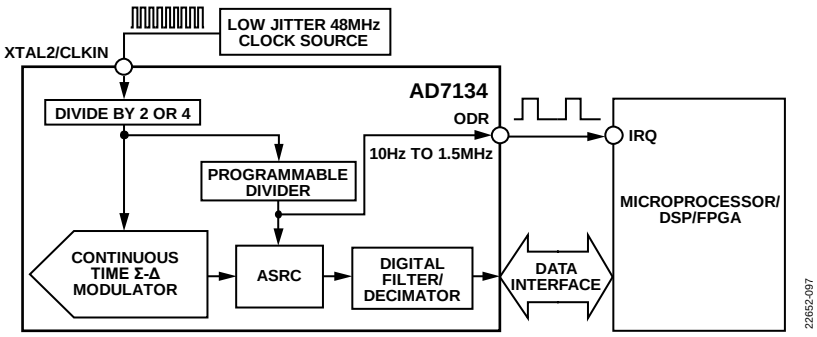

Figure 75. ASRC Master Mode Functional Diagram

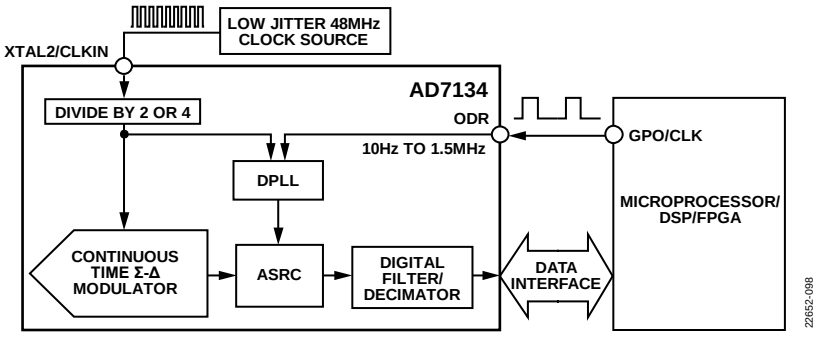

Figure 76. ASRC Slave Mode Functional Diagram

DIGITAL FILTERS

The AD7134 offers four types of digital filters: sinc3, sinc6, and two wideband filters. The sinc3 filter type includes an additional setting with 50 Hz/60 Hz rejection (see Table 19). In SPI control mode, these filters can be chosen on a per channel basis. In pin control mode, only one filter can be selected for all channels.

The digital filters available can be operated at any output data rate within the range mentioned in Table 19, allowing the user to choose the optimal input bandwidth and speed of the conversion vs. the desired power mode or resolution.

Sinc Filters

The sinc filters on the AD7134 employ a cascaded integrator comb (CIC) topology to produce a response similar to a sinc function, equivalent to a running averaging operation on the output samples from the ASRC. The sinc filters enable a low latency signal path, useful for applications such as time domain analysis, measurement of dc inputs, and for control loops. Two types of sinc filters are available on the AD7134. The sinc6 filter offers a balance between noise rejection and latency, whereas the sinc3 filter offers the minimum latency path and supports a wide ODR range down to 10 SPS.

The sinc6 filter has a −3 dB bandwidth of 0.1861 × ODR, and the sinc3 filter has a −3 dB bandwidth of 0.2617 × ODR. The Noise Performance and Resolution section contains the noise performance for the sinc filters across power modes and ODR values.

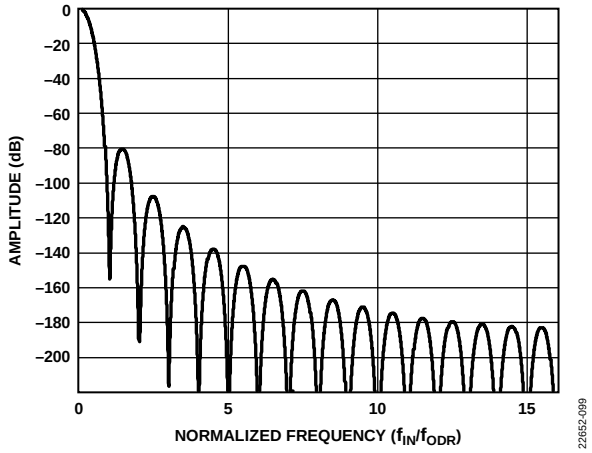

Figure 77. Sinc6 Filter Frequency Response

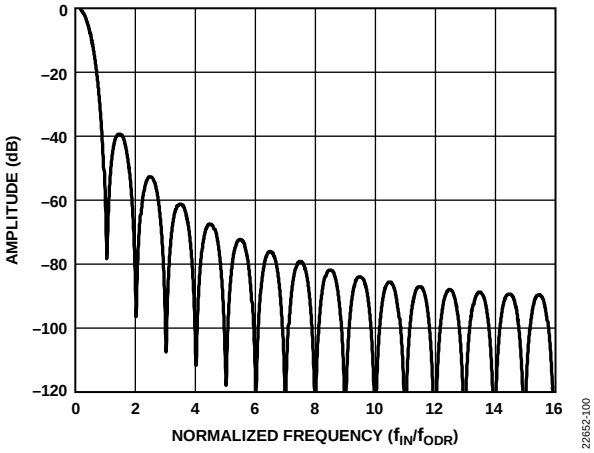

Figure 78. Sinc3 Filter Frequency Response

The settling of the sinc6 filter is 6.5/ODR. For a 374 kSPS ODR, the time to fully settled data is 17.37 µs.

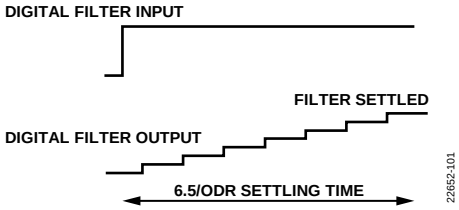

Figure 79. Sinc6 Filter Step Response

The settling of the sinc3 filter is 3.5/ODR cycles. Therefore, for a 374 kSPS ODR, the time to fully settled data is 9.35 µs.

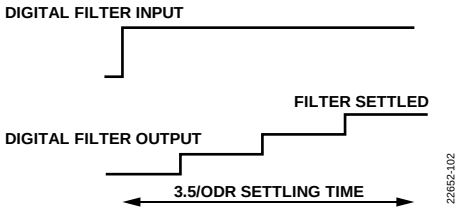

Figure 80. Sinc3 Filter Step Response

Table 19. Digital Filter Options

Filter Name	−3 dB Bandwidth (Hz)	ODR Range	Description
Sinc3 Filter	0.2617 × ODR	0.01 kSPS to 1496 kSPS	Fast settling
Sinc3 Filter with 50 Hz/60 Hz Rejection	0.2753 × ODR	0.01 kSPS to 1496 kSPS	Fast settling with simultaneous 50 Hz and 60 Hz rejection when ODR = 50 SPS
Sinc6 Filter	0.1861 × ODR	2.5 kSPS to 1.496 MSPS	Balancing settling with rejection
Wideband 0.433 Hz × ODR Filter	0.433 × ODR	2.5 kSPS to 374 kSPS	Wideband low ripple filter
Wideband 0.10825 Hz × ODR Filter (Available Only in SPI Control Mode)	0.108 × ODR	2.5 kSPS to 374 kSPS	Wideband low ripple filter with lower bandwidth

Simultaneous 50 Hz and 60 Hz Rejection

Because the sinc filter rejects signals at the frequency around integer multiples of the ODR, it can be used to reject undesired interference at a specific frequency higher than the input band of interest. Because the sinc3 filter supports an ODR down to 10 SPS, a typical application for the sinc3 filter is to make dc to low bandwidth measurements while rejecting line frequencies at 50 Hz or 60 Hz.

Figure 81 shows the frequency response of the sinc3 filter when the output data rate is programmed to 50 SPS. The sinc3 filter provides 102 dB rejection at 50 Hz ± 1 Hz.

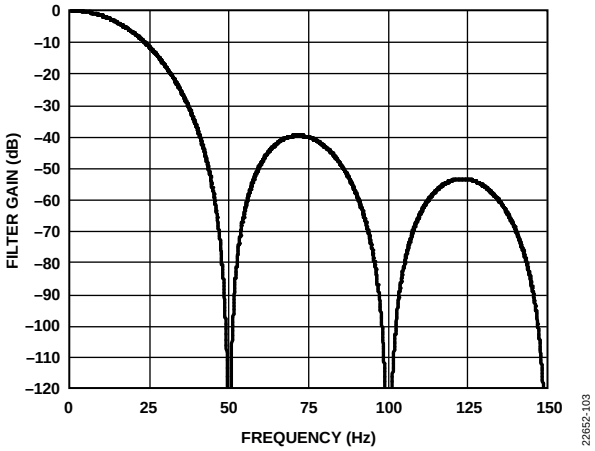

Figure 81. Sinc3 and Sinc6 Filter Response (ODR = 50 SPS)

Figure 82 shows the frequency response of the sinc3 filter when the output data rate is programmed to 60 SPS. The sinc3 filter provides 106 dB rejection at 60 Hz ± 1 Hz.

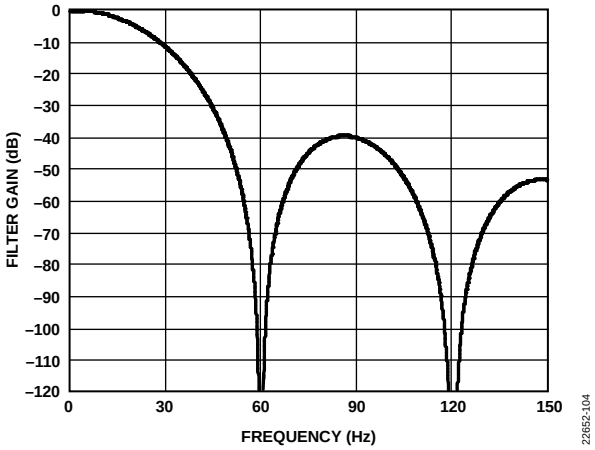

Figure 82. Sinc3 and Sinc6 Filter Response (ODR = 60 SPS)

When the output data rate is 10 SPS, simultaneous 50 Hz and 60 Hz rejection is obtained. The sinc3 filter provides 102 dB rejection at 50 Hz ± 1 Hz and 105 dB at 60 Hz ± 1 Hz.

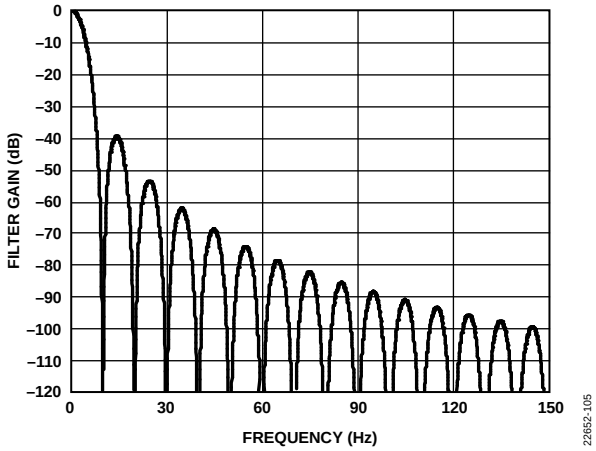

Figure 83. Sinc3 and Sinc6 Filter Response (ODR = 10 SPS)

Simultaneous 50 Hz and 60 Hz rejection can also be achieved by selecting the sinc3 and 50 Hz/60 Hz rejection filter path. When the sinc3 filter places a notch at 50 Hz, the 50 Hz/60 Hz rejection postfilter places a first-order notch at 60 Hz. The output data rate is 50 SPS. Figure 84 shows the frequency response of the sinc3 and 50 Hz/60 Hz rejection filter path. The rejection at 50 Hz and 60 Hz (±1 Hz) is in excess of 67 dB.

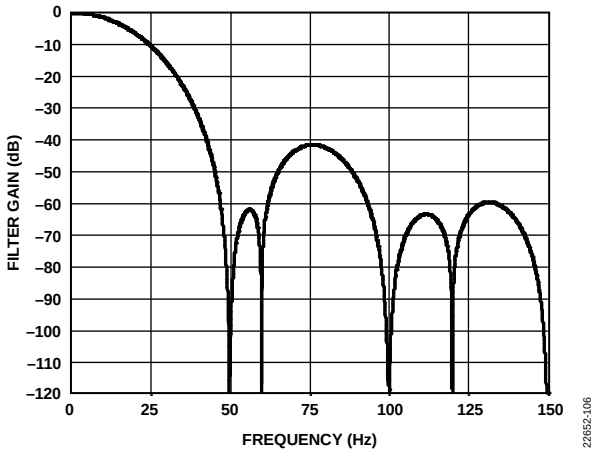

Figure 84. Sinc3 and 50 Hz/60 Hz Rejection Filter Response (ODR = 50 SPS)

Wideband Low Ripple Filter

The wideband low ripple filter has a low ripple pass band, narrow transition band, and high stop band rejection. The filter response is close to an ideal brick wall filter, making it ideal for frequency domain measurement and analysis.

Two wideband low ripple filter options are available on the AD7134: one filter has a −3 dB corner at 0.433 Hz × ODR, and the other filter has a −3 dB corner at 0.10825 Hz × ODR.

Both wideband low ripple filter options offer a pass-band ripple of 32 µdB and a stop band attenuation of −110 dB. For noise performance and resolution, see the Noise Performance and Resolution section.

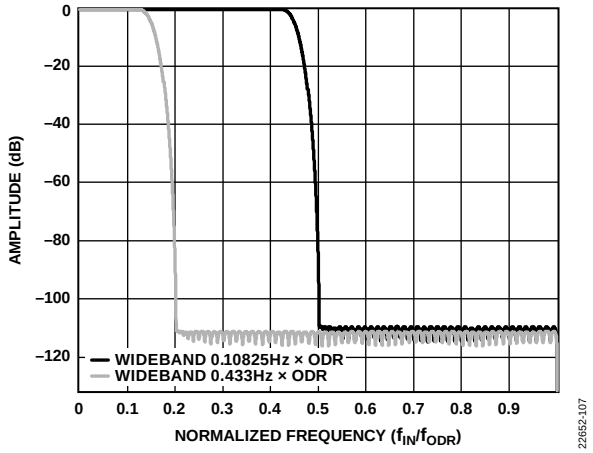

Figure 85. Low Ripple Wideband 0.433 Hz × ODR Filter and Wideband 0.10825 Hz × ODR Filter Frequency Response

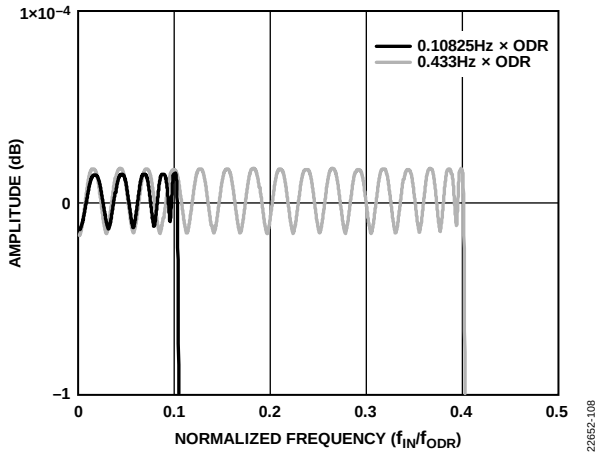

Figure 86. Low Ripple Wideband 0.433 Hz × ODR Filter and Wideband 0.10825 Hz × ODR Filter Pass-Band Ripple

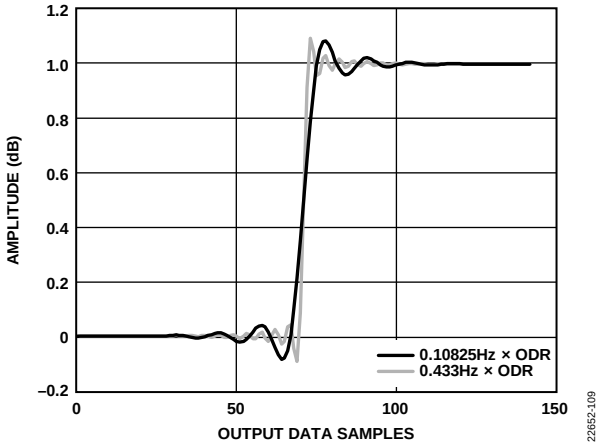

Figure 87. Low Ripple Wideband 0.433 Hz × ODR Filter and Wideband 0.10825 Hz × ODR Filter Step Response

QUICK START GUIDE

The AD7134 offers users a multichannel platform measurement solution for ac and dc signal processing. Flexible filtering allows the AD7134 to be configured to simultaneously sample ac and dc signals on a per channel basis. The ASRC allows users to granularly set the output data rate controlling the input bandwidth of the measurement. This ability, coupled with the flexibility of the digital filter, allows the user to choose the right application settings and meet latency, bandwidth, and performance targets. Key capabilities that allow users to choose the AD7134 as their platform high resolution ADC are highlighted as follows:

- Four fully differential analog inputs
- Fast throughput simultaneous sampling ADCs catering for input signals up to 391 kHz
- Two selectable power modes (high performance and low power) for scaling the current consumption and input bandwidth of the ADC to achieve optimal measurement efficiency
- Wideband, low ripple, digital filter for ac measurement
- Fast sinc3 filter for precision low frequency, low latency measurement
- Two ASRC modes (master mode and slave mode) allow user flexibility in digital interface
- Two antialias modes enabling the user to choose higher levels of alias rejection
- Choice of SPI or pin strapped configuration option
- Offset, gain, and phase calibration registers per channel
- Common-mode voltage output buffer to set the common-mode voltage of the input
- On-board 1.8 V LDO regulators for single-supply operation

Refer to Figure 88 and Table 20 for the typical connections and minimum requirements to start using the AD7134.

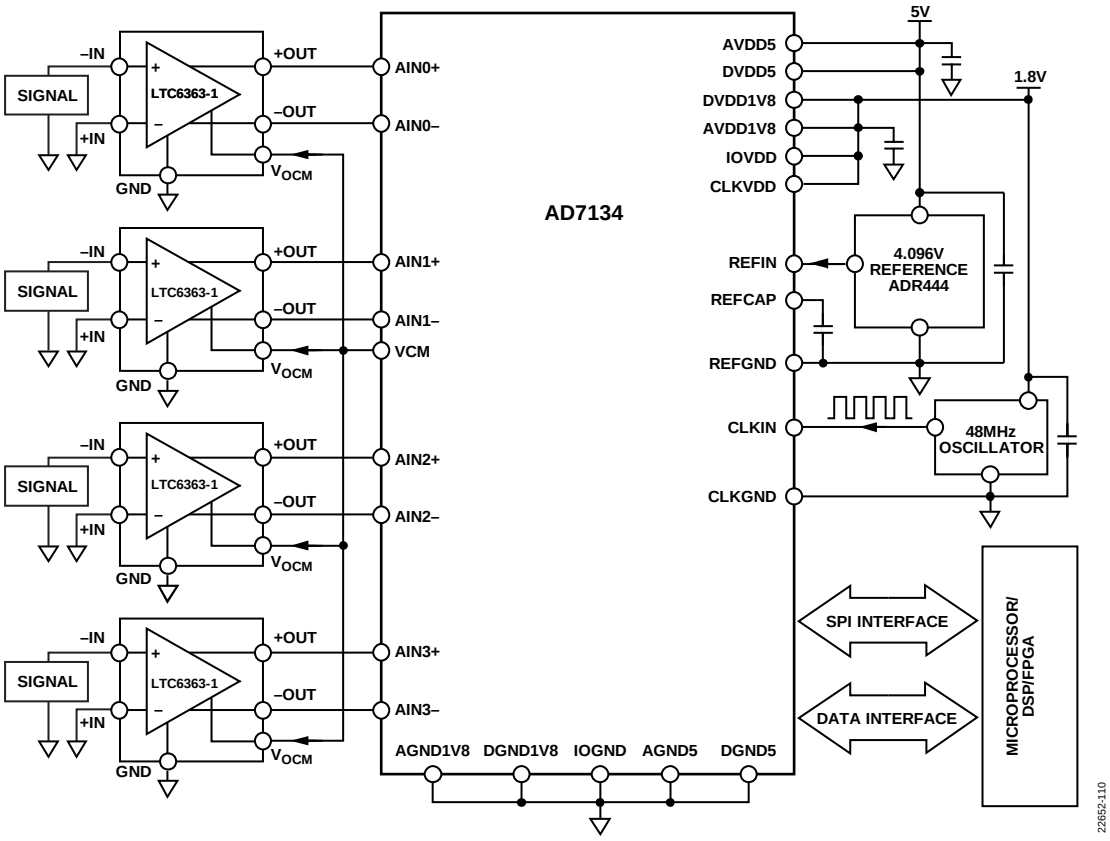

Figure 88. Typical Connections Diagram

Table 20. Requirements to Operate the AD7134

Requirement	Description
Power Supplies	5 V AVDD5 and DVDD5 supply, 1.8 V – IOVDD, CLKVDD, AVDD1V8, and DVDD1V8 (LT8606, LT8607)
External Reference	4.096 V or 5 V (ADR444/ADR445)
Input Stage	AD8421, ADA4075-2, ADA4945-1, LTC6363
External Clock	Crystal or a CMOS/LVDS clock for the ADC modulator sampling
FPGA or DSP	1.65 V to 1.95 V digital I/O level

STANDALONE MODE

The user has a digital host without an SPI interface and needs a −3 dB input bandwidth of 102.4 kHz. The user also desires a flat pass-band response with robust data interface. The recommended scheme is pin controlled master mode. The 102.4 kHz input bandwidth with flat pass band can be achieved by using a 0.433 × ODR FIR filter. The minimum ODR needed can be calculated as input bandwidth = 0.433 × ODR. Therefore, the minimum ODR needed is 237 kSPS. From Table 28, the closest ODR value of 256 kSPS can be programmed.

The robust interface calls for using the CRC. Therefore, the frame size is 24 data bits + 8-bit header that includes a 6-bit CRC and a 2-bit status.

The DCLK value required is >(Frame Size + 6) × ODR, giving the user a value of 9.7 MHz. From Table 30, the closest DCLK option is 12 MHz.

The settings to be configured are pin control mode control, ASRC master, high performance mode, gated DCLK output, 32-bit data output, 256 kSPS ODR, 12 MHz DCLK, 0.433 × ODR filter, external LDO regulator, and 4-channel output.

Refer to the Device Configuration section for programming these settings.

Table 21. Configuration 1 Hardware Settings

Pin Function	Supply/Level	Comments
AVDD5, DVDD5	5 V	Supply
IOVDD, LDOIN, AVDD1V8, DVDD1V8, CLKVDD	1.8 V	Supply
$\overline{\text{PIN}}$/SPI	Low	Pin control
CLKSEL	High	Crystal input
MODE	High	ASRC master
DCLKMODE	Low	Gated DCLK
DCLKIO	High	DCLK output
FILTER1, FILTER0	Low, low	0.433 × ODR filter
FORMAT1, FORMAT0	High, low	4-channel output
FRAME1, FRAME0	High, high	32-bit output
PWRMODE	High	High performance
DCLKRATE2, DCLKRATE1, DCLKRATE0	Low, low, high	12 MHz DCLK
DEC3, DEC2, DEC1, DEC0	Low, low, high, high	256 kSPS ODR

LOW LATENCY SYNCHRONOUS DATA ACQUISITION

The user has an input signal bandwidth of 250 kHz and needs a 24-bit output with minimum latency. There are eight channels and the user needs tight synchronization between the channels.

The recommended scheme is to use two devices in SPI controlled slave mode. The external ODR signal can synchronize both devices with a digital interface reset issued simultaneously. See the Multidevice Synchronization section for more details.

The 250 kHz input bandwidth with minimum latency can be achieved by the sinc3 filter. The minimum ODR needed can be calculated as input bandwidth = 0.2617 × ODR. Therefore, the ODR required is 956 kSPS.

The external DCLK value required is >(Frame Size + 6) × ODR, giving the user a value of 29 MHz. Provide the DCLK and ODR values as per the timing specifications listed in Table 3.

The settings to be configured are SPI control mode control, ASRC slave, high performance mode, gated DCLK input, 24-bit data output, 956 kSPS ODR, 29 MHz DCLK, sinc3 filter, external LDO regulator, and 4-channel output.

Refer to the Device Configuration section for programming these settings. After power-on, verify the hardware configuration by reading the DEVICE_STATUS register.

Table 22. Configuration 2 Hardware Settings

Pin Function	Supply/Level	Comments
AVDD5, DVDD5	5 V	Supply
IOVDD, CLKVDD, AVDD1V8, LDOIN, DVDD1V8	1.8 V	Supply
$\overline{\text{PIN}}$/SPI	High	SPI control mode
CLKSEL	High	Crystal input
MODE	Low	ASRC slave
DCLKMODE	Low	Gated DCLK
DCLKIO	Low	DCLK input

Program the registers in Table 23 with the values listed and leave the all the other registers at their default values.

Table 23. Software Settings

SPI Register	Value	Comments
DATA_PACKET_CONFIG	0x20	24-bit frame
DEVICE_CONFIG	0x01	High performance mode
CHAN_DIG_FILTER_SEL	0xAA	Sinc3 filter
DIGITAL_INTERFACE_CONFIG	0x03	4-channel parallel

DEVICE CONTROL

The AD7134 has independent paths for reading data from the ADC conversions and for controlling the device functionality.

For control, the device can be configured in either of the following two modes:

- Pin control mode: pin strapped digital logic inputs (allowing a subset of the configurability options to be used)
- SPI control mode: over a 3-wire or 4-wire SPI interface (complete configurability)

On power-up, the state of the $\overline{\text{PIN}}$/SPI pin determines the mode used. SPI control mode offers a full set of configurability, including access to the AD7134 internal diagnostic features. Pin control mode offers a subset of selectable features in exchange for easy configurability. The user can choose the mode of operation by the voltage level applied to the $\overline{\text{PIN}}$/SPI pin

Along with the $\overline{\text{PIN}}$/SPI pin, four additional pins must be configured to ensure the correct operation of either SPI or pin control mode. Table 24 shows a list of pin controlled functions that are common to pin control mode and SPI control mode operation. The pins listed in Table 24 are sampled only when the AD7134 is powered on.

Table 24. Common Control Pin Function Summary

Pin Mnemonic	Pin Function
$\overline{\text{PIN}}$/SPI	Controls the mode selection, pin or SPI.
MODE	ASRC mode of operation selection, master or slave mode operation.
CLKSEL	Input clock source selection, crystal or CMOS.
DEC0/DCLKIO	DCLK direction selection.
DEC1/DCLKMODE	Gated or Free Running DCLK selection.

PIN CONTROL MODE

Pin control mode eliminates the need for an SPI communication interface. When a single known configuration is required by the user, or when only limited reconfiguration is required, the number of signals that require routing to the digital host can be reduced using this mode. Pin control mode is useful in digitally isolated applications where minimal adjustment of the configuration is needed. Pin control mode helps save on PCB design and eliminates routing of digital lines.

Pin control offers a subset of the core functionality and ensures a known state of operation after power-up or reset. Pin control mode selectable options include the following:

- Digital filter
- Frame size
- Data interface format
- Decimation rate and DCLK frequency
- High performance mode or low power mode

Figure 89 shows pin configurable functions. All the pins except the ones listed in Table 24 can be changed dynamically.

Refer to Figure 90 for more details. A limited set of diagnostics are available and CLKOUT is enabled by default in pin control mode only when the crystal option is selected.

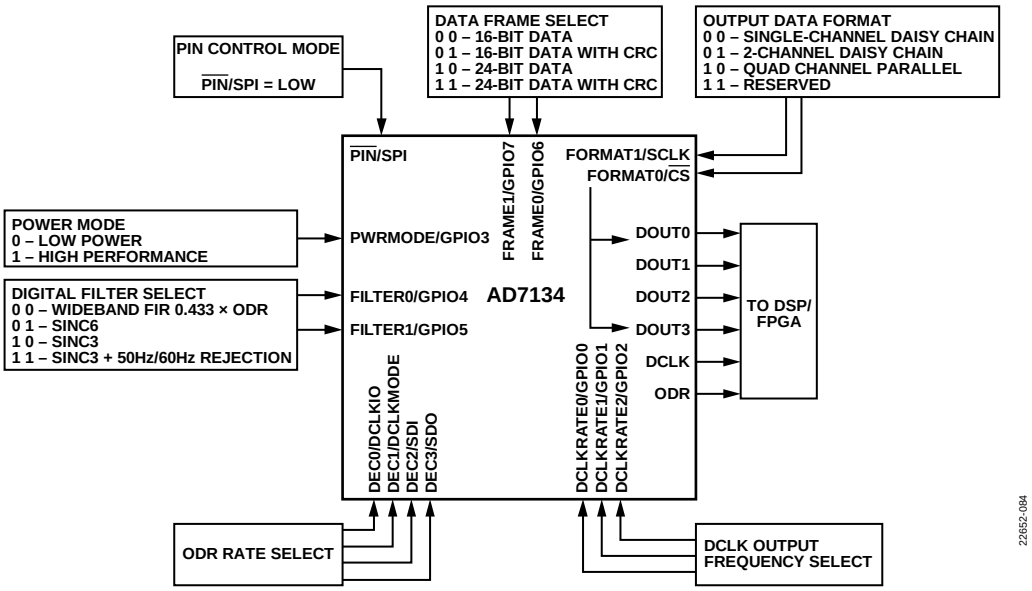

Figure 89. Pin Control Mode Configurable Functions

SPI CONTROL MODE

The AD7134 has a 4-wire SPI interface that is compatible with QSPI™, MICROWIRE®, and DSPs. Using the SPI interface, the user can access the ADC register map and control the AD7134.

To use SPI control mode, the $\overline{\text{PIN}}$/SPI pin of the AD7134 must be set to logic high. The SPI control operates as a 16-bit, 4-wire interface, allowing read and write access. The SPI serial control interface of the AD7134 is an independent path for controlling and monitoring the AD7134. There is no direct link to the data interface. The timing of ODR and DCLK is not directly related to the timing of the SPI control interface. Refer to the SPI Interface section for more details.

The SPI control mode allows the user to configure more features than the pin control mode and use the device fully. The additional features available in SPI control mode are the following:

- Full suite of diagnostic features
- More options for ODR select and DCLK frequency select in master mode
- XCLKOUT disable
- Option for wideband digital filter FIR 0.108 × ODR
- Digital interface reset
- Programmable gain, offset, and channel delay
- Sleep mode
- 2-channel averaging
- Additional inherent alias mode (AA2)
- Programmable ODR, ODR/2, ODR/4, and ODR/8
- VCM pin output voltage programmability
- Per channel phase delay

MULTIFUNCTION PINS

The AD7134 has multifunction pins where the function of these pins change depending on the selected control mode. Table 25 shows a summary of the multifunction pin functions in each mode of operation.

Table 25. Multifunction Pin Function Summary

Pin Mnemonic	Pin Function in Pin Control Mode	Pin Function in SPI Control Mode
FORMAT0/$\overline{\text{CS}}$ FORMAT1/SCLK	ADC output channel format selection	SPI interface
DEC3/SDO DEC2/SDI	ASRC master mode decimation ratio selection	
DEC1/DCLKMODE	ASRC master mode: decimation ratio selection ASRC slave mode: DCLK mode selection (free running or gated)	DCLK mode selection (free running or gated)
DEC0/DCLKIO	ASRC master mode: decimation ratio selection, DCLK is output ASRC slave mode: tie pin low to set it as input	DCLK I/O direction selection (input or output)
DCLKRATE0/GPIO0 DCLKRATE1/GPIO1 DCLKRATE2/GPIO2	DCLK output frequency selection in ASRC master mode	General-purpose I/O
PWRMODE/GPIO3	Device power mode selection (high performance or low power mode)	
FILTER0/GPIO4 FILTER1/GPIO5	Digital filter type selection	
FRAME0/GPIO6 FRAME1/GPIO7	Output data frame selection	

DEVICE CONFIGURATION

PROGRAMMING OUTPUT DATA RATE AND CLOCK

Output Data Rate

AD7134 can be programmed to any output data rate from 10 SPS to 1496 kSPS. Depending on the MODE pin configuration, the ODR can be generated by the AD7134 or provided externally. When the AD7134 generates the ODR, the mode is called master mode, and when ODR is provided externally, the mode is called slave mode.

Table 26. Mode Pin Configuration

MODE Pin	ASRC Mode of Operation	ODR Pin Direction
0	Slave	Input
1	Master	Output

ASRC Slave Mode

In ASRC slave mode, the ODR is controlled by a continuous external pulse signal connected to the ODR pin, with the ODR equal to the pulse frequency. This feature gives the user the flexibility to update the frequency of the external pulse dynamically, which changes the ODR value, but there is a loss of data during a change over time plus the filter settling time. The change over time is dominated by the unlocking and locking of the phase-locked loop (PLL) that tracks the ODR. For ODR values of >10 kSPS, a change of ODR value to less than 500 SPS does not cause the PLL to unlock and lock back again, allowing seamless data. Refer to Table 27 for change over time for ODR ranges for various filters in slave mode.

For Example 1, if the user changes the ODR value from 300 kSPS to 2500 SPS while using the digital FIR filter, the change over time is 22 ms + 512/2500 = 226.8 ms.

For Example 2, if the user changes the ODR value from 1 MSPS to 500 kSPS while using a sinc3 digital filter, the change over time is 11 ms + 512/500,000 = 12 ms.

The supported ODR range varies by the power mode and the digital filter type selected (see Table 19 for more details).

Table 27. ODR Change Over Time in Slave Mode

ODR Range	FIR	Sinc6	Sinc3
750 kHz to 1.46 MHz	Not applicable	5.5 ms + 512/ODR	5.5 ms + 512/ODR
374 kHz to 750 kHz	Not applicable	11 ms + 512/ODR	11 ms + 512/ODR
365 kHz to 374 kHz	ODR range not supported in slave mode	22 ms + 512/ODR	22 ms + 512/ODR
1.46 kHz to 365 kHz	22 ms + 512/ODR	22 ms + 512/ODR	22 ms + 512/ODR
1.46 kHz to 2.5 kHz	Not applicable	22 ms + 512/ODR	22 ms + 512/ODR
732 SPS to 1.46 kHz	Not applicable	Not applicable	44 ms + 512/ODR
366 SPS to 732 SPS	Not applicable	Not applicable	88 ms + 512/ODR
183 SPS to 366 SPS	Not applicable	Not applicable	6 sec + 512/ODR
91.5 SPS to 183 SPS	Not applicable	Not applicable	12 sec + 512/ODR
45.7 SPS to 97.5 SPS	Not applicable	Not applicable	24 sec + 512/ODR
22.8 SPS to 45.7 SPS	Not applicable	Not applicable	48 sec + 512/ODR
11.4 SPS to 22.8 SPS	Not applicable	Not applicable	96 sec + 512/ODR
10 SPS to 11.4 SPS	Not applicable	Not applicable	192 sec + 512/ODR

ASRC Master Mode

In ASRC master mode, the AD7134 device generates the output data at a programmable decimation ratio. The user can program the decimation ratio in both pin control and SPI control mode to achieve the desired output date rate.

In pin control mode, the decimation rate is fixed as per the predefined pin control options. Sixteen decimation ratio options are available through the configuration of the DEC0/DCLKIO pin to DEC3/SDO pin. The final ODR value also depends on the digital filter type. Table 28 summarizes the ODR values available in master mode.

In SPI control mode, the ODR is available at the full range described in Table 19. The ODR can be programmed via the ODR_VAL_INT, Bits[23:0] bits and ODR_VAL_FLT, Bits[31:0] bits with a resolution of 0.01 SPS.

In Example 1, for an ODR to be 187.23 kSPS, calculate the decimation rate as follows:

Decimation Rate = *MCLK*/187.23 kHz =

24 MHz/187.23 kHz = 128.1846 = 0x0000802F4103E5

Program ODR_VAL_INT, Bits[23:0] with 0x80.

Program ODR_VAL_FLT, Bits[31:0] with 0x2F4103E5.

In Example 2, for an ODR to be 375 kSPS, calculate the decimation rate as follows:

Decimation Rate = MCLK/375 kHz = 24 MHz/375 kHz = 64 = 0x00004000000000

Program ODR_VAL_INT, Bits[23:0] with 0x000040.

Program ODR_VAL_FLT, Bits[31:0] with 0x00000000.

Every time the ODR_VAL_INT, Bits[23:0] and ODR_VAL_FLT, Bits[31:0] are changed, the MASTER_SLAVE_TX_BIT in the TRANSFER_REGISTER must be set to update the ODR to the new value.

The user has the flexibility to change the ODR value, but that means a loss of data of about 2 µs plus the filter settling time. The 2 µs time, t_{DELAY}, is constant across the ODR range. See Figure 90 for more details.

The SPI control mode also allows the user to set a different ODR rate for each of the four ADC channels using the ODR_RATE_SEL_CHx bits. The ODR options are limited to 1, ½, ¼, or ⅛ of the ODR frequency.

Table 28. Output Data Rate Configuration in Pin Control Master Mode

DEC3	DEC2	DEC1	DEC0	Wideband 0.433 Hz × ODR Filter (kSPS)	Sinc6 Filter (kSPS)	Sinc3 Filter (kSPS)
0	0	0	0	374	1496	1496
0	0	0	1	325	1250	1000
0	0	1	0	285	1000	750
0	0	1	1	256	750	375
0	1	0	0	235	500	187.5
0	1	0	1	200	375	128
0	1	1	0	175	325	64
0	1	1	1	128	256	32
1	0	0	0	100	175	16
1	0	0	1	80	128	5
1	0	1	0	64	80	2.5
1	0	1	1	32	64	1.25
1	1	0	0	16	32	0.625
1	1	0	1	10	10	0.06
1	1	1	0	5	5	0.05
1	1	1	1	2.5	2.5	0.01

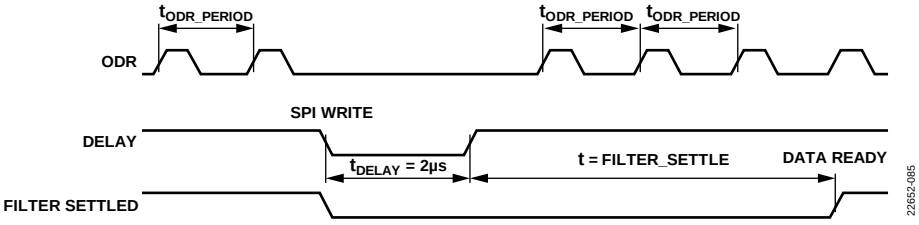

Figure 90. Master Mode ODR Change Over

Data Clock (DCLK)

The data clock can be either an input or an output depending on the direction of the ODR pin. When ODR is output for master mode, set the DEC0/DCLKIO pin high to configure DCLK as an output. When ODR is input for slave mode, tie the DEC0/DCLKIO pin low to configure DCLK as an input. The data clock can be operated in gated mode or free running mode controlled by the DEC1/DCLKMODE pin.

When operated in pin control mode with the ASRC set to master mode, the DCLK operation is limited to gated output only. When operating in pin control mode with the ASRC set to slave mode, or when operating in SPI control mode, the DCLK mode of operation is controlled by the DEC1/DCLKMODE pin and DEC0/DCLKIO pin, as shown in Table 29.

In master mode, the DCLK pin is configured as an output. The DCLK frequency is derived from the AD7134 device master clock and can be configured using the DCLKRATE0/GPIO0 pin to DCLKRATE2/GPIO2 pin in pin control mode, or DCLK_FREQ_SEL (Bits[3:0]) in Register 0x11 in SPI control mode. SPI control mode offers 16 DCLK output frequency options, and pin control mode offers eight. Table 30 lists all the DCLK output frequency options.

In slave mode, the DCLK pin is an external signal.

Table 29. DCLK Mode of Operation in Pin Control Mode or in SPI Control Mode

DEC1/DCLKMODE	DEC0/DCLKIO	MODE	DCLK Direction	DCLK Mode
0	0	0	Input	Gated
0	0	1	Reserved	Reserved
0	1	0	Reserved	Reserved
0	1	1	Output	Gated
1	0	0	Input	Free running
1	0	1	Reserved	Reserved
1	1	0	Reserved	Reserved
1	1	1	Output	Free running

Table 30. DCLK Output Frequency Configuration

DCLKRATE2 or Register 0x11, Bit 3	DCLKRATE1 or Register 0x11, Bit 2	DCLKRATE0 or Register 0x11, Bit 1	Register 0x11, Bit 0	DCLK Output Frequency Options
0	0	0	0	48 MHz (SPI/pin control mode default)
0	0	0	1	24 MHz[1]
0	0	1	0	12 MHz
0	0	1	1	6 MHz[1]
0	1	0	0	3 MHz
0	1	0	1	1.5 MHz[1]
0	1	1	0	750 kHz
0	1	1	1	375 kHz[1]
1	0	0	0	187.5 kHz
1	0	0	1	93.75 kHz[1]
1	0	1	0	46.875 kHz
1	0	1	1	234.375 kHz[1]
1	1	0	0	11.71875 kHz
1	1	0	1	5.859375 kHz[1]
1	1	1	0	2.929688 kHz
1	1	1	1	1.464844 kHz[1]

[1] Not available in pin control mode.

PROGRAMMING DIGITAL FILTER

In pin control mode, four digital filter types are available through the configuration of the FILTER1/GPIO5 pin and FILTER0/GPIO4 pin. All four ADC channels share the same digital filter type.

One additional digital filter type, wideband 0.10825 Hz × ODR filter, is available only in SPI control mode. In SPI control mode, the digital filter type can be configured independently for each ADC channel via the DIGFILTER_SEL_CHx bits and the additional digital filter type (wideband 0.10825 Hz × ODR filter or wideband 0.433 Hz × ODR filter) via the WB_FILTER_SEL_CHx bits, where x is the channel number from 0 to 3. Table 31 lists all the digital filter options.

To configure the digital filter dynamically, change the digital filter first and then change the output data rate to ensure proper operation.

PROGRAMMING DATA INTERFACE

The digital interface consists of setting up the format, the frame, and the averaging options.

Output Channel Format

The data interface format is determined by setting the FORMAT0/$\overline{\text{CS}}$ pin and FORMAT1/SCLK pin. The logic state of the FORMAT0/$\overline{\text{CS}}$ pin and FORMAT1/SCLK pin is read on power-up and determine how many data lines (DOUTx) the ADC conversions are output on.

Because the FORMAT0/$\overline{\text{CS}}$ pin and FORMAT1/SCLK pin are read on power-up of the AD7134 and the device remains in this output configuration, this function must always be hardwired and cannot be altered dynamically. Figure 91 and Figure 92 show the formatting configuration for the digital output pins on the AD7134.

Table 31. Digital Filter Configuration

FILTER1 or DIGFILTER_SEL_CHx, Bit 1	FILTER0 or DIGFILTER_SEL_CHx, Bit 0	WB_FILTER_SEL_CHx, Bit 0	Digital Filter Type
0	0	0	Wideband 0.433 Hz × ODR filter
0	0	1	Wideband 0.10825 Hz × ODR filter[1]
0	1	X[2]	Sinc6
1	0	X[2]	Sinc3
1	1	X[2]	Sinc3 with additional 60 Hz rejection

[1] Available in SPI control mode only.
[2] X means don't care.

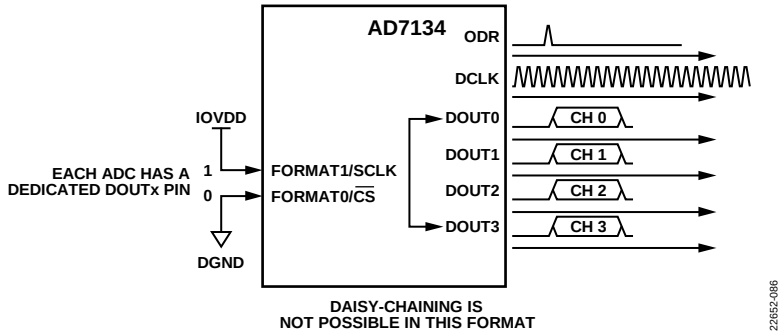

Figure 91. FORMAT1, FORMAT0 = 10, Four Data Output Pins

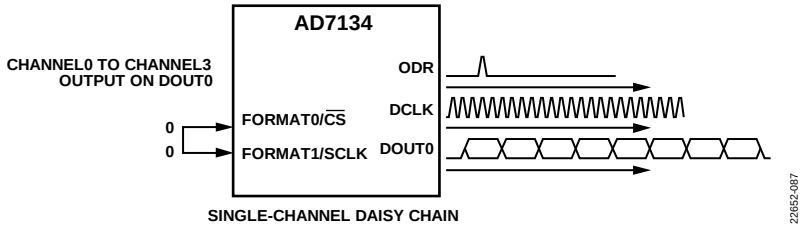

Figure 92. FORMAT1, FORMAT0 = 00, One Data Output Pin

Calculate the minimum required DCLK rate for a given data interface configuration as follows:

DCLK (Minimum) = *Output Data Rate* × *Channels per DOUTx* × (*Frame Size* + 6)

For example, if data size = 24 and 6-bit CRC is enabled with one DOUTx line, single-channel daisy-chaining,

DCLK (Minimum) = 374 kSPS × 4 *Channels per DOUTx* × (24 + 8 + 6) = 44.88 Mbps

The AD7134 can output the data from four ADC channels in parallel using four output pins, or serialize the data and output them using fewer pins. Paralleling the output enables a higher output data rate for a given DCLK frequency. In addition to using fewer I/Os, serializing the data allows data from multiple AD7134 devices to be daisy-chained.

The output channel format is controlled by the FORMAT0/$\overline{\text{CS}}$ pin and FORMAT1/SCLK pin in pin control mode and the format bits in the DIGITAL_INTERFACE_CONFIG register in SPI control mode.

Table 33 lists all the output channel format options.

Data Frame

The frame of each ADC sample output data consists of the data followed by an optional status/CRC header.

The AD7134 supports two data length options: 16-bit and 24-bit. The AD7134 also supports one CRC-6 header option. Table 34 lists all the output data frame options.

Data Delay

The data output of each channel of the AD7134 can be individually delayed by 0, 1, or 2 MCLK cycles using the MPC_CONFIG register. The front-end signal chain components can add varying amounts of phase delay depending on factors like gain setting and filtering. This feature gives the user flexibility to match the delays on different channels and thus achieving tight phase matching between channels.

POWER MODES

The AD7134 offers two power modes, high performance mode and low power mode. These modes are available in both pin control mode and SPI control mode. In pin control mode, the PWRMODE/GPIO3 pin controls the AD7134 operating power mode. In SPI control mode, the POWER_MODE bit controls the power mode. Additional sleep mode is available in SPI control mode. Table 32 summarizes the power mode configurations. In both pin control mode and SPI control mode, a full device power-down can be initiated through the $\overline{\text{PDN}}$ pin.

Table 32. Power Mode Configuration

PWRMODE/GPIO3 or POWER_MODE Bit	SLEEP_MODE_EN	Device Power Mode
0	0	Low power mode
1	0	High performance mode
X	1	Sleep mode

To operate the device correctly in low power mode, the user must toggle the setting from low power mode to high performance mode and back to low power mode.

In pin control mode, to set the AD7134 in low power mode, toggle the PWRMODE/GPIO3 pin to high and after a delay of 10 ms toggle it back to low. In SPI control mode after power up, change the POWER_MODE bit from low to high and after a delay of 10 ms change it back to low.

Also, in pin slave mode, first provide the ODR signal and then change the power mode to ensure dynamic sampling of the PWRMODE/GPIO3 pin.

Table 33. Output Channel Format Configuration

FORMAT1/SCLK Pin or Bit 1, DIGITAL_INTERFACE_CONFIG Register	FORMAT0/$\overline{\text{CS}}$ Pin or Bit 0, DIGITAL_INTERFACE_CONFIG Register	Output Channel Format
0	0	Single-channel daisy-chain mode. DOUT0 acts as an output and DOUT2 acts as a daisy-chain input. DOUT1 and DOUT3 are disabled. Data from all four ADC channels are serialized and output on DOUT0 (SPI default mode).
0	1	Dual-channel daisy-chain mode. DOUT0 and DOUT1 act as outputs, and DOUT2 and DOUT3 act as daisy-chain inputs. Data from Channel 0 and Channel 1 are serialized and output on DOUT0. Data from Channel 2 and Channel 3 are serialized and output on DOUT1.
1	0	Quad-channel parallel output mode. Each ADC channel has a dedicated data output pin.
1	1	Channel data averaging mode. In pin control mode, data from all four channels are averaged and output on DOUT0. DOUT2 acts as daisy-chain input. DOUT1 and DOUT3 are disabled. In SPI control mode, the averaging operation is defined by the AVG_SEL bits in Register 0x12.

Table 34. Data Frame Options

FRAME1/GPIO7 Pin or Bit 1, DATA_PACKET_CONFIG Register	FRAME0/GPIO6 Pin or Bit 0, DATA_PACKET_CONFIG Register	Data Frame	Frame Length
0	0	16-bit ADC data	16
0	1	16-bit data with CRC-6	24
1	0	24-bit ADC data	24
1	1	24-bit data with CRC-6	32

INHERENT ANTIALIASING FILTER MODES

The CTSD architecture allows the AD7134 to reject signals around the integer multiples of the modulator sampling frequency, protecting its input band of interest from aliasing. The AD7134 offers two antialiasing modes. The default antialiasing mode, AA1, offers a typical 85 dB of aliasing rejection.

The other antialiasing mode, AA2, improves the rejection to 102.5 dB with the cost of a higher offset drift of 1.03 µV/°C, additional power consumption of 3 mW per channel, and higher noise level with dynamic range reduction.

The AA2 mode is only available in SPI control mode and can be enabled by setting the AA_MODE bit to 1.

Table 35 shows typical performance differences in inherent antialias modes. The filter is wideband 0.433 × ODR FIR filter, and the ODR value is ODR = 374 kSPS.

Table 35. Performance Difference in Inherent Antialias Modes

Parameter	AA1 Mode	AA2 Mode
Dynamic Range	107.4 dB	105.9 dB
SNR	106.6 dB	105.4 dB
Alias Rejection	85 dB	102.5 dB
Offset Drift	0.5 µV/°C	1.03 µV/°C
Power per Channel	126 mW	129 mW

DYNAMIC RANGE ENHANCEMENT, CHANNEL AVERAGING

The AD7134 is equipped with built in 4-channel and 2-channel averaging functions that increase the performance by 6 dB and 3 dB. The device performs on-board averaging of the output data from two or four of its ADC channels to improve the dynamic range.

Averaging is a digital postprocessing option after the digital filter, which performs averaging of the output data from multiple ADC channels. This averaging feature allows the user to measure a signal with multiple ADC channels and average the result to achieve higher dynamic range.

In 4:1 averaging mode, a single input signal is applied to all four input channels, as shown in Figure 93. In this mode with averaging enabled, the AD7134 is a single-channel device with the dynamic range improved by 6 dB.

In 2:1 averaging mode, a single input signal is applied to two input channels, as shown in Figure 94. In this mode with averaging enabled, the AD7134 behaves as a 2-channel device with each channel dynamic range improved by 3 dB.

For noise performance of channel averaging, see the Noise Performance and Resolution section.

Figure 93 and Figure 94 show the connection diagrams for using these functions. For 4:1 channel averaging, short all four inputs together, but for 2:1 channel averaging short two inputs together.

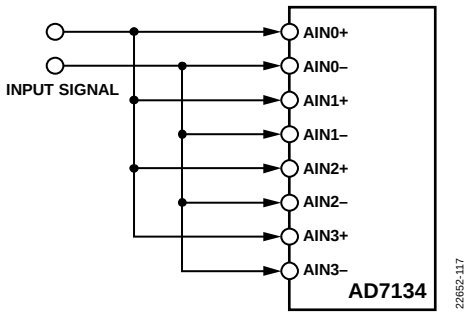

Figure 93. 4:1 Channel Averaging

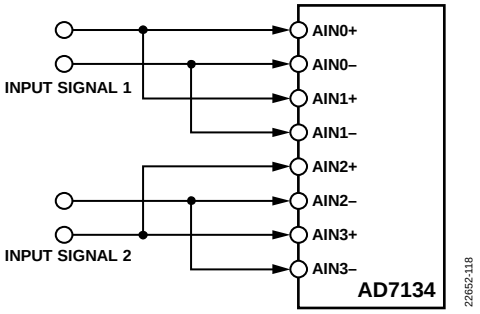

Figure 94. 2:1 Channel Averaging

In pin control mode, only 4:1 averaging is available through the configuration of the FORMAT0/$\overline{\text{CS}}$ pin and FORMAT1/SCLK pin, as shown in Table 33.

In SPI control mode, set the format bits, Bits[1:0] in Register 0x12 to 11 to enable the output averaging function. Then use Bits[3:2] in Register 0x12 to select the channel averaging options.

CALIBRATION

In SPI control mode, the AD7134 offers the ability to calibrate offset and gain individually for each channel. The user can alter the gain and offset of the AD7134 and subsystem.

Each channel of the ADC has an associated gain and offset coefficient that is stored for each ADC after factory programming. The user can overwrite these gain and offset coefficients using the gain and offset correction registers. However, after a reset or power cycle, the gain and offset register values revert to the hard coded, programmed factory setting.

These options are available in SPI control mode only.

OFFSET CALIBRATION

The offset correction registers provide 23-bit, signed, twos complement registers for channel offset adjustment. The offset setting for each channel is enabled using the OFFSET_CAL_EN_CHx bits. The offset range is $\pm V_{REF}$ with a step size of $V_{REF}/2^{22}$. An LSB of offset register adjustment changes the digital output by 2 LSBs. For example, changing the offset register from 0 to 100 changes the digital output by 200 LSBs.

For additional register information, see the OFFSET_CAL_EN_CHx bit descriptions in Table 81, Table 87, Table 93, and Table 99.

GAIN CALIBRATION

The gain register is 20 bits with a range of ±50% and the LSB applying a gain of 0.95 ppm. The gain setting for each channel is enabled using the GAIN_CAL_SEL_CHx bits.

For additional register information, see the GAIN_CAL_SEL_CHx bit descriptions in Table 78, Table 84, Table 90, and Table 96.

APPLICATIONS INFORMATION

POWER SUPPLY

The AD7134 has a total of seven power supply input pins: AVDD5, DVDD5, LDOIN, AVDD1V8, DVDD1V8, CLKVDD, and IOVDD.

Refer to the power supply voltages in Table 1 for operating supply voltage values for 4.096 V and 5 V reference inputs.

To simplify the power supply design, the user can supply the AVDD5 pin and DVDD5 pin together with a single, low noise 5 V supply, and supply the AVDD1V8, DVDD1V8, CLKVDD, and IOVDD pins together with a single low noise 1.8 V supply.

To generate 5 V and 1.8 V rails, the power circuits using LT8606 or LT8607 provide a low EMI, small size solution supporting a wide range of input voltages.

On-Board LDO Regulators

To simplify the power supply design, the AD7134 provides three internal LDO regulators to generate the 1.8 V required for the AVDD1V8, DVDD1V8, and CLKVDD pins from a single 2.6 V to 5.5 V supply connected to the LDOIN pin, as shown in Figure 95.

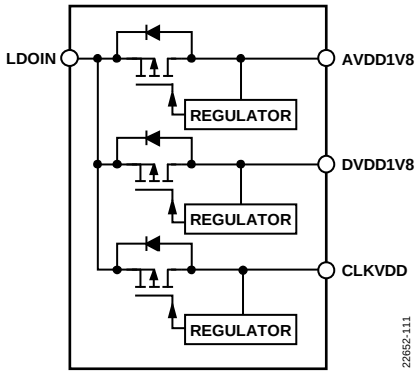

Figure 95. Internal LDO Regulator Connections

If the internal LDO regulators are used, the AVDD1V8, DVDD1V8, and CLKVDD pins must be decoupled with a 10 µF, 10 µF, and 2.2 µF capacitor, respectively, to their respective grounds, as shown in Figure 96.

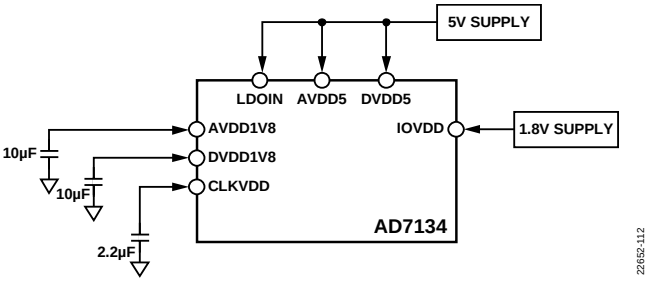

Figure 96. Internal LDO Regulator Mode Power Connections

The internal LDO regulators are enabled only when the IOVDD supply is powered up first by an external 1.8 V supply.

The internal LDO regulators work properly if the power supply sequence in Figure 97 is followed. Ensure that the IOVDD and LDOIN pins are powered after DVDD5, as shown in Figure 97.

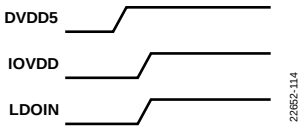

Figure 97. Power Sequencing in Internal LDO Mode

If the internal LDO regulators are not used, tie the LDOIN pin to DVDD1V8, as shown in Figure 98.

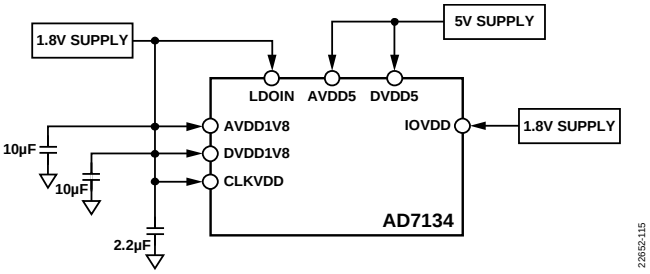

Figure 98. External Power Mode Connections

If AVDD1V8, DVDD1V8, and CLKVDD are powered from a separate external supply, take caution on the supply sequencing. All three supplies are connected internally through the back diode of the regulator. If one supply powers up first, it can supply power to other supplies through the back diode and the other LDO regulators.

REFERENCE NOISE FILTERING

The user can reduce the noise contribution of the reference source to the overall ADC conversion accuracy by filtering the reference signal. An internal 20 Ω resistor between the REFIN pin and the REFCAP pin enables the user to form a first-order RC filter by connecting a capacitor on the REFCAP pin.

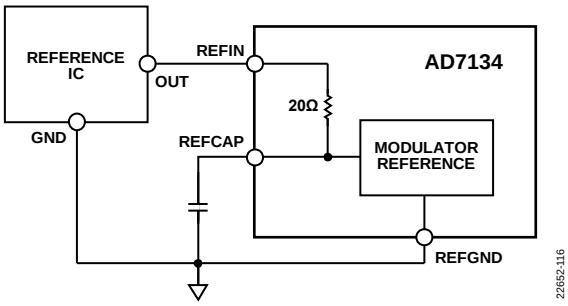

Figure 99. Reference Input Connection Using REFIN pin

The equivalent noise bandwidth of a first-order filter is 0.25/RC in Hz.

The noise contribution of the reference source is proportional to the ADC input signal. The reference noise contribution is at the highest when the input signal is at full scale. The reference noise has no impact on the output when the ADC inputs are shorted.

As a general rule, limit the reference noise to ¼ of the noise of the ADC to have a minimal effect on the overall SNR.

The total reference noise is the root sum square of its 1/f noise and its wideband noise.

The 1/f noise of the reference can be estimated by its peak-to-peak noise specification over the 0.1 Hz to 10 Hz frequency range. The wideband noise can be calculated from the voltage noise density specification of the reference and the reference noise bandwidth.

An example to calculate the reference noise requirement based on the ADC mode of operation follows.

Consider the AD7134 device that is operating in high performance mode, ODR = 374 kSPS, and wideband 0.433 Hz × ODR filter with a reference voltage of 4.096 V.

According to Table 9, the ADC noise in this setup is 12.63 µV rms. The reference noise is ¼, equal to 3.16 µV rms.

An ADR444 reference IC is chosen to provide the reference voltage for the AD7134. The ADR444 has a 0.1 Hz to 10 Hz peak noise of 1.8 µV p-p, and a noise spectrum density of 78.6 nV/√Hz. The ADR444 1/f noise is 1.8 µV p-p or 1.8/6.6 = 0.273 µV rms.

The total reference noise is the root sum square of its 1/f noise and its wideband noise. Therefore,

$$\sqrt{(0.273^2 + n^2_{WB})} < 3.16$$

Solving the equation yields the wideband noise, n_{WB}, of the ADR444, which must be less than 3.14 µV rms.

The wideband noise of the ADR444 can be calculated by multiplying its noise spectrum density by the square root of the noise bandwidth.

$$78.6\ \text{nV}/\sqrt{\text{Hz}} \times \sqrt{NBW} < 3.14\ \mu\text{V rms}$$

where *NBW* is the noise bandwidth.

The calculation shows that the noise bandwidth must be less than 1.6 kHz. The equivalent noise bandwidth of a first-order filter is 0.25/RC, in Hz.

The AD7134 has an internal 20 Ω resister between the REFIN pin and the REFCAP pin. By connecting the output of the ADR444 to the REFIN input, a capacitor > 7.9 µF on the REFCAP pin is sufficient to limit the reference noise to the desired value. It is recommended to place a 10 µF capacitor on the REFCAP pin.

MULTIDEVICE SYNCHRONIZATION

The integrated ASRC of the AD7134 helps achieve multidevice synchronization with a single low speed ODR line, giving less than 10 ns of phase matching between channels on different devices, which makes it easy to synchronize. Applications like condition-based monitoring, power quality analyzer, and sonar system demand tight phase matching across high numbers of channels, making the digital interface design complex.

The devices can be clocked with their own local clock sources yet can achieve tight phase matching without the need of routing high speed clock lines that adds to EMI issues. This clocking also means that for applications demanding isolation, the user can pass fewer low speed lines across the isolation barrier, as shown in Figure 100.

The AD7134 does not require the system clock across isolation to synchronize isolated devices, which enables higher ODR in isolated simultaneous sampling applications.

To achieve tight synchronization, the user must configure all the devices in slave mode and use the SPI to set the DIG_IF_RESET bit to reset the digital interface before the data capture. This DIG_IF_RESET command must be given to all the slaves simultaneously using one single SPI write command.

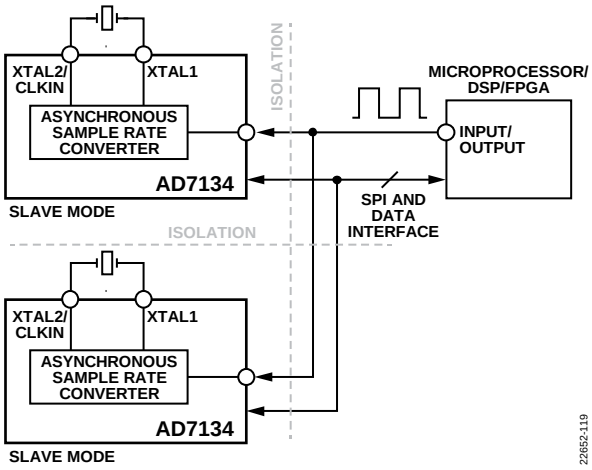

Figure 100. Simplified Clocking in AD7134

COHERENT SAMPLING

The integrated ASRC of the AD7134 allows the user to set granular sampling speeds from 0.01 kSPS to 1496 kSPS with a resolution of 0.01 SPS. The ASRC allows the user to detect the line frequency and change the ODR so that there is a rational relationship between the input signal frequency and the sampling speed.

Mathematically, coherent sampling is expressed as f_{IN}/f_{ODR} = number of cycles in sampling window ÷ number of data points for FFT. For example, f_{ODR} is 32 kSPS, f_{IN} is 1 kHz, and the number of samples is 512.

Number of cycles in the sampling window = 512 × 1000/32 kSPS = 16.

If the input frequency is 1.01 kHz, the ODR change is 4096 × 1010/16 = 258.56 kSPS to achieve coherent sampling.

In applications like power metering and analysis, it is necessary to achieve the required accuracy on the harmonic data and metering parameters and ensure coherency between the ADC sampling rate and the power line frequency.

LOW LATENCY DIGITAL CONTROL LOOP

The control loop demands low latency, but the antialias filter for noise reduction adds significant delay, increasing the loop latency. The inherent antialias rejection of the AD7134 removes the need of the antialias filter, significantly reducing the signal chain latency.

The AD7134 supports throughput rates up to 1496 kSPS, making it an optimal choice for low latency, 24-bit digital control loops.

AUTOMATIC GAIN CONTROL

The AD7134 has additional GPIO functionality when operated in SPI control mode. One of the diagnostic features of the AD7134 enables GPIO7 to report any of the diagnostic errors by enabling the ERR_PIN_OUT_EN bit.

The user can use GPIO7 to report any input overrange detection, and based on the report the user can control the gain of the front-end amplifier. Configure GPIO7 as an output and set the ERR_PIN_EN_OR_AIN bit, which enables errors from input overrange and enables error reporting on GPIO7. Wire the FRAME1/GPIO7 pin to gain control of the amplifier.

Any input overrange above $\pm V_{REF}$ on the input lines causes GPIO7 to go high, which brings down gain of the PGA, which reduces its output below $\pm V_{REF}$. This control happens automatically without any intervention of the digital host.

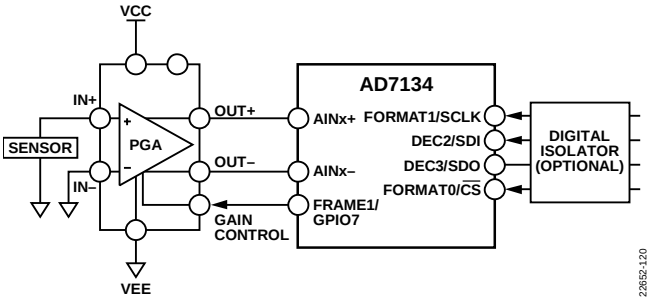

Figure 101. Automatic Gain Control

FRONT-END DESIGN EXAMPLES

The analog front-end circuit of the AD7134 must perform the following sequence:

1. Provide adequate input impedance to match the source.
2. Provide reasonably low output impedance to drive the 6 kΩ differential input resistance of the ADC.
3. Convert the input signal to a balanced, fully differential signal with fixed common-mode voltage of 2 V to 2.5 V.
4. Provide the necessary gain or attenuation to match the maximum source signal amplitude to the full-scale input range of the ADC.

The following low noise amplifiers are recommended for various types of system challenges. Example operational amplifiers include the ADA4625-2, ADA4610-2, AD8605, and the ADA4075-2. Examples of fully differential amplifiers include the ADA4940-2, LTC6363, and the ADA4945-1. Example instrumentation amplifiers include the AD8421.

Differential Input Signal with Controlled Common-Mode and High Impedance Source

An example of a high impedance source includes a Wheatstone bridge type of configuration for strain and pressure monitoring.

The input common mode is well controlled, needing no common-mode rejection, and a dual op amp configuration works properly. The circuit in Figure 102 can also provide gain to the signal. Because of the easy to drive nature of the AD7134, the op amps do not need to have a high bandwidth and a strong output drive to overcome kickbacks from traditional ADCs. The ADA4610-2 is an optimal choice because it offers wide input range, low noise, suitable bandwidth, and high linearity. The AD8605 is another optimal choice for rail to rail, low voltage, single-supply operation.

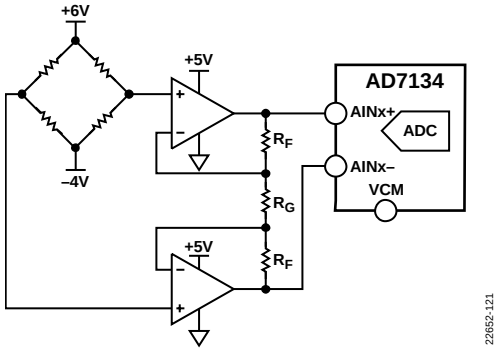

Figure 102. Buffered Input with Gain and No Additional Common-Mode Rejection

Differential Input with Unregulated Common-Mode Voltage Low Impedance Source

If a wider input common-mode range is required, a fully differential amplifier can be used, as shown in Figure 103.

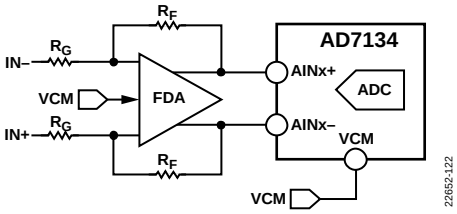

Figure 103. Use a Fully Differential Amplifier to Extend Input Common-Mode Voltage and Signal Gain/Attenuation

This circuit can also provide gain or attenuation of the signal and is responsible for rejecting the input common mode.

Fully differential amplifiers such as the ADA4940-2, ADA4945-1, and LTC6363 are all suitable choices. Devices such as the LTC6363-0.5, LTC6363-1, and LTC6363-2 with a highly matched integrated resistor network offer unmatched CMRR at 94 dB minimum.

Fully Differential Amplifier with Single Unipolar Supply

The circuit in Figure 104 has no passive components, but it offers fixed gain for single-ended or differential inputs having a low impedance source. Single unipolar 5 V supply operation relaxes the power design.

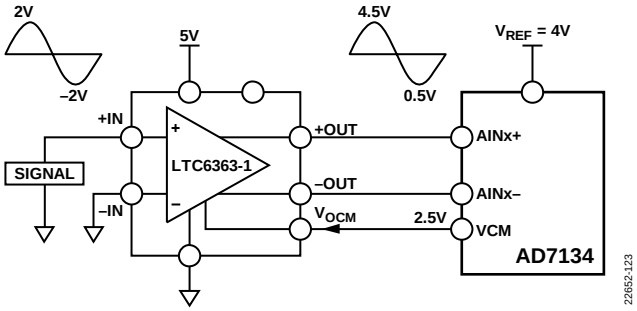

Figure 104. Fully Differential Amplifier with Single Supply

Single-Ended or Pseudo Differential Input with High Source Impedance

The single-ended or pseudo differential input signals must be converted into fully differential signals before driving into the AD7134. All the circuit examples given in the Front-End Design Examples section for interfacing with differential signals can work with interfacing with single-ended or pseudo differential signals. Connect the second input to signal ground or a common-mode voltage source.

A number of other circuits can be used to perform single-ended to differential conversions.

Instrumentation Amplifier with Single-Ended to Differential Output Conversion

The circuit configuration in Figure 105 is suitable for single-ended input signal, high common-mode range, and low input current suitable for a high impedance source for gain ≥ 1.

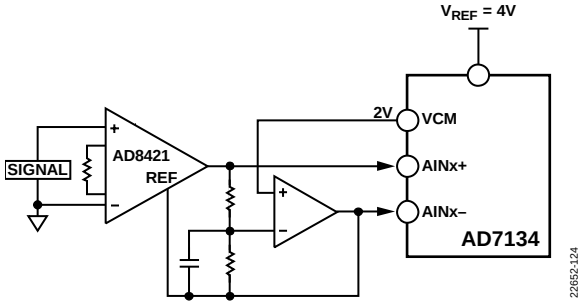

Figure 105. Instrumentation Amplifier in Differential Output Configuration

Precision Dual Amplifier

The circuit in Figure 106 is suitable for a high impedance source, which can add gain or attenuation. Example operational amplifiers are the ADA4941-1, LT6350, ADA4805-2, and ADA4004-2.

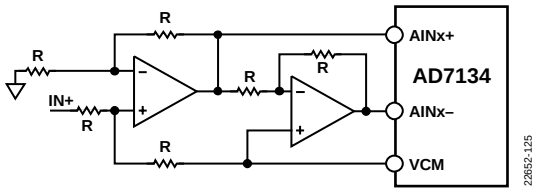

Figure 106. Dual Operation Amplifier Configuration

Operational Amplifier and Fully Differential Amplifier

The circuit in Figure 107 is a low input bias operational amplifier with a fully differential amplifier, like the ADA4945-1, is suitable for high impedance sources. The fully differential amplifier circuit can add gain or attenuation.

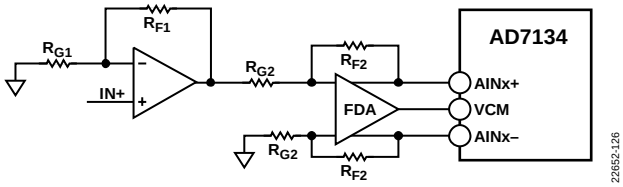

Figure 107. Op Amp and Fully Differential Amplifier

DIGITAL INTERFACE

The AD7134 digital interface consists of two independent parts: an SPI interface for register access and device configuration, and a data interface for sending out conversion data.

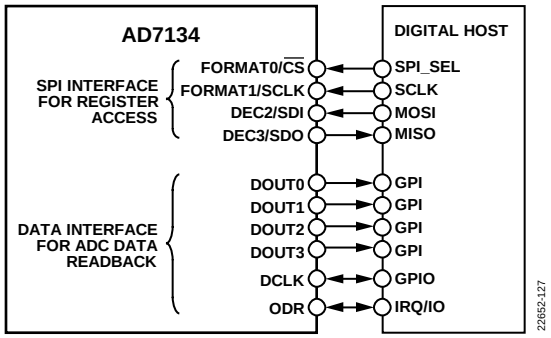

Figure 108. Communication Interface of AD7134

SPI INTERFACE

The SPI control mode is one of the two control modes supported on the AD7134. The other mode is pin control mode. The user can choose which mode to operate the device in by setting the logic level on the $\overline{\text{PIN}}$/SPI pin. Set the $\overline{\text{PIN}}$/SPI pin high to enable the SPI control mode, which enables the SPI interface of the device.

The AD7134 has a 4-wire SPI interface that is compatible with QSPI, MICROWIRE, and DSPs. The interface operates in SPI Control Mode 0. In SPI Control Mode 0, the SCLK idles low, the falling edge of the SCLK is the driving edge, and the rising edge of the SCLK is the sampling edge. The output data on the SDO pin is clocked out on the falling edge of SCLK and the input data on the SDI pin is sampled on the rising edge of SCLK.

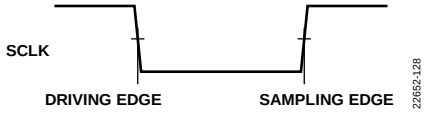

Figure 109. SCLK Edges

The SPI interface uses a 7-bit addressing scheme and supports three modes of operation: 3-wire mode, 4-wire mode, and minimum I/O mode. An optional CRC function is also available for improving communication robustness.

3-Wire Mode

In this mode, SDO is disabled and read data is available on the DEC2/SDI pin. SDO is high impedance in the command, and the data is shorted to SDI (see Figure 110).

4-Wire Mode

The standard SPI interface consists of four signals, as shown in Figure 111.

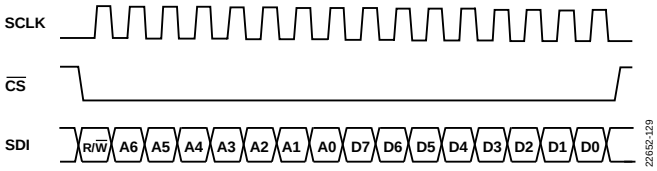

Figure 110. 3-Wire Mode Write/Read Command

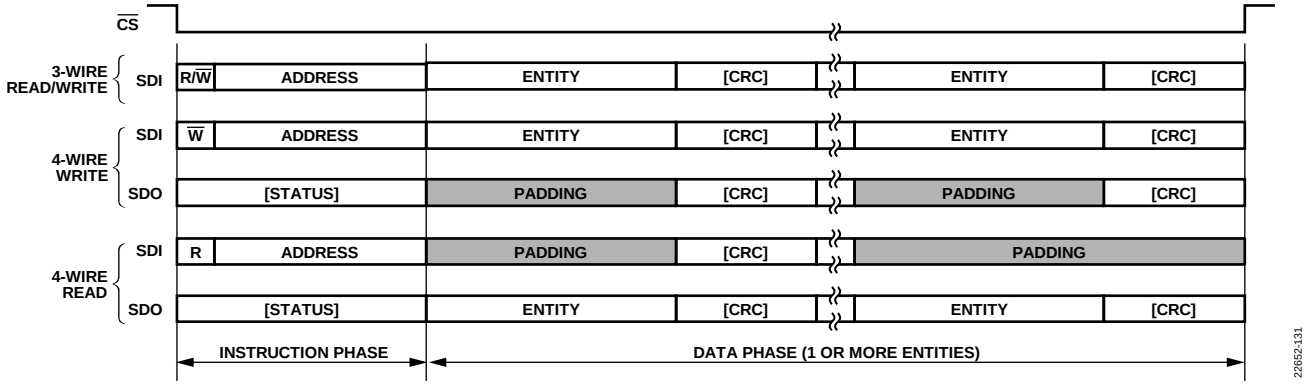

Figure 111. 3-Wire and 4-Wire SPI Transaction Protocols

SPI CRC

The SPI CRC code is an optional feature. Enabling it allows the user to improve transaction robustness on the SPI bus, for example, in a noisy environment.

The SPI CRC is calculated with the $x^8 + x^2 + x + 1$ polynomial with an initial seed value of 0xA5.

The SPI CRC achieves a Hamming distance of 4 with a maximum word length of 119 bits.

3-Wire Isolated Mode

The AD7134 powers up in 3-wire isolated mode and a toggle on the chip select line makes the AD7134 exit this mode. The chip select line is not used and must be connected to ground. The SPI packet is 24 bits, consisting of an 8-bit command and address, 8-bit data (entity), and 8-bit CRC. See Figure 112 for 3-wire isolated mode. Also note that a streaming register read or write is not supported in this mode.

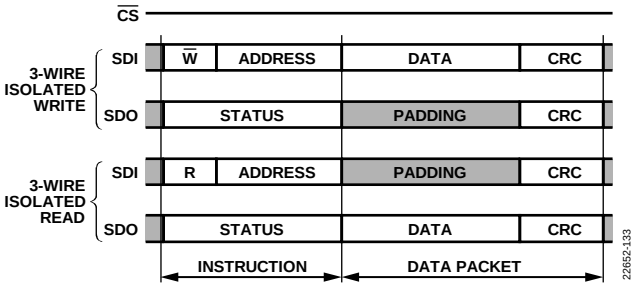

Figure 112. 3-Wire Isolated Mode

Additional SPI Features

The AD7134 provides the user several options to control the SPI interface. Some of the features are listed in the following sections.

Single Instruction Mode

When the SINGLE_INSTR bit is set, streaming is disabled and only one read or write operation is performed regardless of the state of the $\overline{CS}$ line. If this bit is set and $\overline{CS}$ remains asserted, the state machine resets after the data byte as if $\overline{CS}$ was deasserted and awaits the next instruction. Single instruction mode forces each data byte to be preceded with a new instruction even though the $\overline{CS}$ line has not been deasserted. Single instruction mode also allows additional flexibility in the usage of the $\overline{CS}$ pin if it is required for an application. The default for this bit is set, resulting in streaming being enabled.

SPI Interface Lock/Unlock

Figure 113. SPI Lock/Unlock and Reset

The AD7134 provides the user an option to lock the SPI interface by performing an SPI write of 24 consecutive 1s. This write blocks the SPI read/write access to registers. To unlock and reset, the user must perform an SPI write of 23 1s and one 0. The status of the SPI interface can be read by completing an SPI read to an SPI register whose value is known. If the SPI interface is out of sync, the user initiates an unlock and resets the SPI interface. At any point, if the SPI interface is not responding, execute a lock and unlock. This unlock/lock does not affect any data transaction in progress on the data interface and does not affect the SDO behavior.

Stream Mode

Stream mode allows the user to consecutively access one or more registers repeatedly without having to carry the overhead associated with setting up the address each cycle. At the end of the loop, the autogenerated address resets to the beginning address and resumes counting until the last address is reached again. The process continues as long as the $\overline{CS}$ is not deactivated. When $\overline{CS}$ is deactivated, stream mode is terminated until started again by the user.

The STREAM_MODE register is used to tell the device how many consecutive registers are to be accessed in the stream mode. If this register is 0x00, the default, streaming is not enabled. If the value in this register is not zero, when streaming is initiated, the value in this register tells the address generator how many consecutive addresses are to be written to or read from before looping back to the beginning address. If the value in this address is 0x01, the same address is written to or read from for the duration of the stream event. If the value is 0x02, two consecutive addresses are written (or read) for the duration. If, for example, the stream entry point is Address 0x10, Address 0x10 is the first address. Address 0x11 is the second address. After this loop is complete, the next autogenerated address is 0x10 and so on. This cycle continues until terminated by the user by deasserting the $\overline{CS}$ line.

To initiate stream mode, the user must first set this register, 0x000E, with a nonzero value indicating how many addresses are to be accessed. Any value between 0x01 and 0xFF is valid. Take care that all addresses within this scope are suitable for streaming because some addresses may be specified as do not change. Next, begin the read or write cycle as usual.

Master Slave Transfer Bit

Bit 0 of the TRANSFER_REGISTER is used as the master slave transfer bit, which is useful when a register is composed of multiple bytes that must all be written simultaneously to prevent erroneous device operation. In master mode, the ODR_VAL_INT_x and ODR_VAL_FLT_x registers need this implementation. When this bit is set, multiple bytes of data that have been transferred using the SPI are written at one time to the slave. Upon completion of the transfer, the slave device clears this bit (autoclear), indicating to the SPI master that the transfer completed and the slave data can be read back if desired by the control program.

DATA INTERFACE

The AD7134 has a flexible data interface designed to support the different digital host types and applications requirements.

The AD7134 can act as the data interface master or slave. The data interface supports both gated and free running clock signals, parallel or serial output data steaming modes, and daisy-chain configuration.

The data interface consists of three signal types: clock, data, and data framing signal.

Data Interface Clock

The AD7134 supports both gated and free running DCLK signals. The ADC output data is clocked out on the DCLK rising edge.

Figure 114. DCLK Edges

DCLK is a bidirectional pin. The AD7134 can act as an interface master and generate the DCLK signal, or act as an interface slave and clock out data based on a received DCLK signal.

When the DCLK pin is configured as an output, the user can choose the DCLK output frequency through the DATA_PACKET_CONFIG register or configuration of the DCLKRATEx/GPIOx pins in pin control mode.

Refer to the Programming Output Data Rate and Clock section for more information on how to configure the DCLK frequency.

Data Bus

The ADC output data appears on the DOUTx pins. Each AD7134 device has four data output pins: DOUT0, DOUT1, DOUT2, and DOUT3. The user has the option to parallel output the ADC conversion result on the four DOUTx pins or to serialize the data from multiple channels and output them using one or two of the DOUTx pins.

Parallel output configuration allows a high data rate at a low DCLK frequency. A serialized output configuration requires fewer I/Os from the digital host and can reduce the number of digital isolator channels required in an isolation application. The daisy-chain mode is available only with a serialized output configuration.

Data Framing Signal

The ODR control signal is dual purposed to act as the framing signal for the AD7134 data interface.

The ODR pin is bidirectional with its signal direction dependent on the ASRC mode of operation.

The output data can be driven out with respect to the ODR falling or rising edge depending on the mode of DCLK used.

Choosing the Data Interface Mode of Operation

The direction of the ODR signal depends on the choice of the ASRC mode of operation. See the Asynchronous Sample Rate Converter section for more information on the ASRC.

Data Interface Status and CRC Header

The user has the option to append a byte width header to each output data sample for additional status information and/or error checking. The header consists of 6-bit CRC code with two status bits, as shown in Table 36.

Table 36. Details of the Header

Bit	Bit Description
7	Chip error
6	Filter settled and PLL locked
[5:0]	6-bit CRC

Bit 7 is set if an error is detected by the on-chip diagnostic circuitry of the AD7134. See the Diagnostics section for more details of the diagnostic features of the device.

Bit 6 is set if the digital filter on the corresponding channel is fully settled and, when operating in ASRC slave mode, the PLL is locked after an ODR input frequency change.

The data sample value does not reflect the correct conversion result when Bit 6 of the header has a value of zero.

Data CRC Calculation

The CRC is calculated with the polynomial and initial seed value as shown in Table 37.

Table 37. Data CRC Calculation

CRC Mode	Polynomial	Default Seed Value
CRC-6	$x^6 + x^5 + x^2 + x + 1$	0x25

Alternative CRC Mode of Operation

The AD7134 uses a linear feedback shift register (LFSR) to calculate the CRC. In pin control mode and in SPI control mode, by default, the LFSR is reset after each data sample with the default seed value (see Table 37). In SPI control mode, the user has the option to alter the LFSR resetting behavior. Configure CRC_POLY_RST_SEL to 1 to disable the reset of the LFSR after each sample, making the current CRC result in the seed value of the next calculation. This mode allows the processor-based digital host to check the CRC less frequently and still be able to detect an error in the bit transfer.

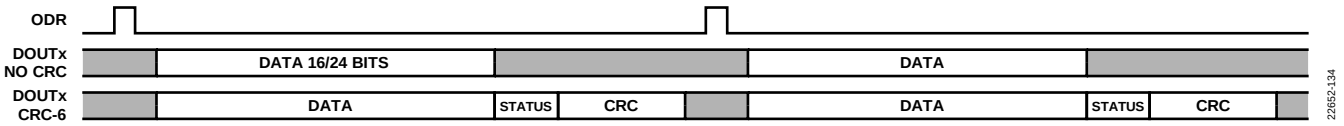

Figure 115. Data CRC Options

ASRC Master Mode Data Interface

When the ASRC is in master mode, the ODR pin behaves as an output. The user has the choice to operate the DCLK pin in gated mode or in free running mode.

With the DCLK pin configured as an output, the AD7134 acts as the data interface master, providing the DCLK signals and the output data steam synchronously to the ODR signal.

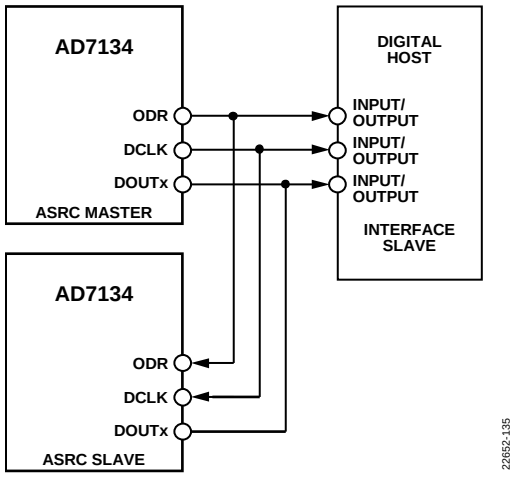

Figure 116. Data Interface Example 1, First AD7134 Device in ASRC Master Mode with the Digital Host as Interface Slave

ASRC Slave Mode Data Interface

When the ASRC is in slave mode, the ODR pin behaves as an input. The user has the choice to operate the DCLK pin in gated mode or in free running mode.

With the DCLK pin configured as an input, the AD7134 acts as the data interface slave, providing the output data stream on the input DCLK driving edge.

If the DCLK pin is configured as a free running input, the user must ensure that the DCLK pin is synchronized to the ODR signal for proper data framing.

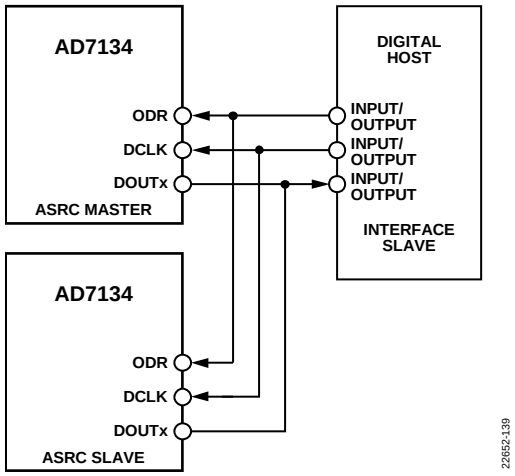

Figure 117. Data interface Example 2, Two AD7134 Devices in ASRC Slave Mode with Digital Host as Interface Master

Daisy-Chaining

Daisy-chaining allows numerous devices to use the same data interface lines by cascading the outputs of multiple ADCs from separate AD7134 devices. The data interface of only one ADC device is in direct connection with the digital host.

For the AD7134, implement this connection by cascading DOUT0 and DOUT1 through a number of devices, or using only DOUT0.

This feature is especially useful for reducing component count and wiring connections, for example, in isolated multiconverter applications or for systems with a limited interfacing capacity.

When daisy-chaining with two channels, DOUT2 and DOUT3 become serial data inputs, and DOUT0 and DOUT1 remain as serial data outputs.

Figure 118 shows an example of daisy-chaining the AD7134 devices with two channels. In this case, the DOUT0 pin and DOUT1 pin of the AD7134 devices are cascaded to the DOUT2 and DOUT3 pins of the next device in the chain. Data readback is analogous to clocking a shift register.

The scheme operates by passing the output data of the DOUT0 pin and DOUT1 pin of an AD7134 downstream device to the DOUT2 and DOUT3 inputs of the next AD7134 device upstream in the chain. The data then continues through the chain until it is clocked onto the DOUT0 pin and DOUT1 pin of the final upstream device in the chain.

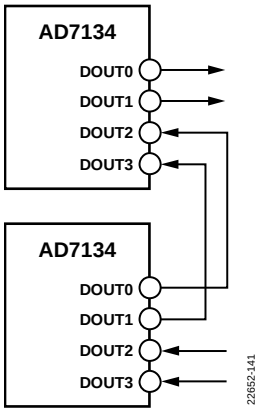

Figure 118. Data Interface Connection with 2-Channel Daisy-Chaining Configuration

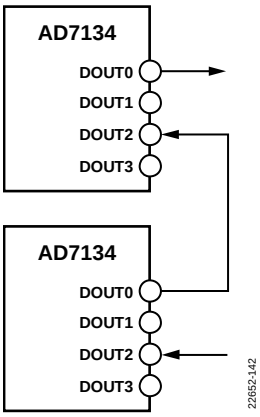

Figure 119. Data Interface Connection with 1-Channel Daisy-Chaining Configuration

Daisy-chaining can be achieved in a similar manner on the AD7134 when using only the DOUT0 pin. In this case, only the DOUT2 pin is used as the serial data input pin, as shown in Figure 119.

If the AD7134 is used in the chain as a master for generating the ODR and DCLK, the user must program the DAISY_CHAIN_DEV_NUM bits to let the device know how many devices are connected to it. Programming the DAISY_CHAIN_DEV_NUM bits ensures that the AD7134 generates a sufficient number of DCLK cycles to clock the data out from all the devices in the chain. For example, in Figure 120, program the DAISY_CHAIN_DEV_NUM bits in the master device to 0x01 so that the AD7134 can generate the number of DCLK cycles to clock out data from both the devices.

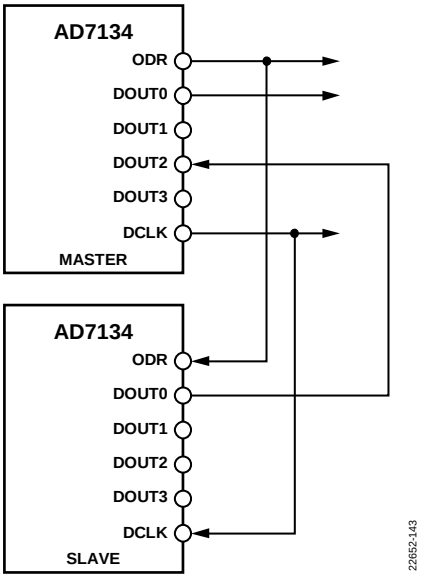

Figure 120. Single Channel Daisy Chain for Master Slave Configuration

The number of devices supported on a chain is limited by the DCLK frequency chosen for a given output data rate.

The maximum usable DCLK frequency allowed when daisy-chaining devices is limited by the combination of timing specifications and the DCLK mode of operation.

Data Interface Frame Length

The AD7134 data interface operates with the byte-based transfer scheme. That is, the transactions are in multiples of eight bits.

The data frame length, defined as the number of data bytes per ODR cycle per DOUTx pin, depends on the following factors:

- Conversion output word size
- Status or CRC header
- Data output format configuration
- Daisy-chain configuration
- Data averaging

The conversion output word size can be 16 bits or 24 bits.

It is optional to include a status or CRC header byte with each conversion result to improve the communication robustness and to receive real-time error status.

The user can choose to parallel or serialize the output data. Serializing the output data from four ADC channels to one DOUTx pin increases the data frame length by 4×.

If multiple devices are daisy-chained, the total data frame length is equal to the sum of the data frame length of the individual devices on the chain.

Frame Length Examples

In Case 1, the following conditions apply:

- 16-bit output format
- No status or CRC header
- Parallel output on all four DOUTx pins
- No daisy chain
- Averaging disabled

The output data frame length is 16/8 = 2 bytes per ODR period on each of the four DOUTx pins.

In Case 2, the following conditions apply:

- 24-bit data format
- Status and CRC header enabled
- Output on two DOUTx pins
- Daisy chain three devices
- Averaging disabled

The output data frame length is (24/8 + 1) × 2 × 3 = 24 bytes per ODR period on each of the two DOUTx pins.

In Case 3, the following conditions apply:

- 24-bit output format
- Status/CRC header enabled
- Output on one DOUTx pins
- Daisy-chain two devices
- 4:1 averaging

The output data frame length is (24/8 + 1) × 4 × 2/4 = 8 bytes per ODR period.

DCLK Frequency Selection

The user must ensure an adequate DCLK frequency is used to clock out the full length of the data frame in time.

The maximum supported DCLK frequency on the AD7134 is 48 MHz as an output and 50 MHz as an input.

Gated DCLK Output Cycles

When DCLK is configured as a gated output, the AD7134 uses an internal counter to control the number of DCLK cycles to output after each ODR pulse. The device automatically adjusts the number of DCLK cycles to output according to its data frame and format configuration.

However, in daisy-chain mode, the device has no inherent knowledge of the number of devices connected on the chain.

In pin control mode, unless the device is configured to operate in quad channel parallel output mode, it assumes a daisy-chain configuration. If the DCLK pin is configured as a gated output, the device assumes that four devices are on the daisy chain. The number of DCLK cycles it generates after each ODR pulse is equal to four times the data frame length of the devices.

In SPI control mode, the user has the flexibility to program the number of devices on the daisy chain through the DAISY_CHAIN_DEV_NUM bits. The value acts as a multiplier to the number of DCLK cycles the device outputs after each ODR pulse when the DCLK is configured as a gated output.

Gated DCLK Output Cycles Examples

In Case 1, the following conditions apply:

- 16-bit output format
- No status or CRC header
- Single-channel daisy-chain mode
- Pin control mode operation
- DCLK configured as gated output

The device outputs 16 × 4 = 64 DCLK cycles after each ODR pulse.

In Case 2, the following conditions apply:

- 24-bit output format
- Status and CRC header enabled
- Dual-channel daisy-chain mode
- Averaging disabled
- SPI control mode operation
- DAISY_CHAIN_DEV_NUM = 3 (decimal)

The device outputs (24 + 8) × 2 × 3 = 192 DCLK cycles after each ODR pulse.

Channel Dependent ODR

In SPI control mode, the AD7134 supports the configuration of different ODR rates on each channel using the CHANNEL_ODR_SELECT register. The rate must be a power of two fraction of the signal frequency on the ODR pin and is limited to a minimum of 1/8 of the main ODR frequency.

Each channel updates its conversion output based on the ODR rate of the channel. For example, if a channel is configured to have an output data rate of ODR/4, its output data updates once every four ODR cycles. Figure 121 shows an example of the data interface timing of a device with different output data rate settings on each channel.

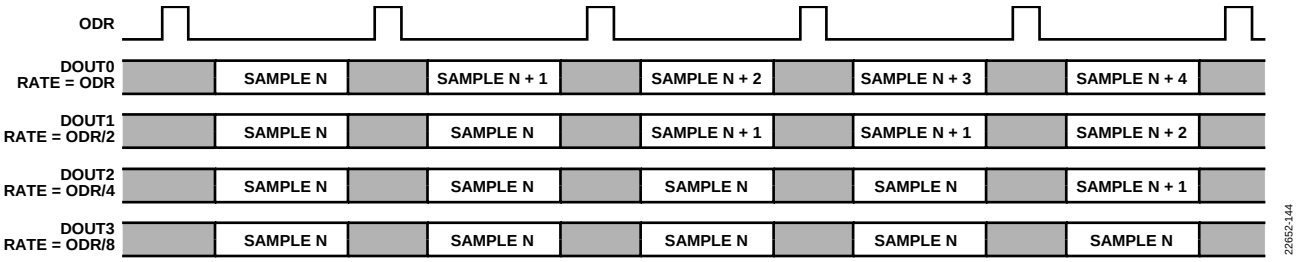

Figure 121. Data Interface Timing Example of a Device with Different ODR Settings on Each Channel

Digital Interface Reset

Bit 1 of the INTERFACE_CONFIG_B register (DIG_IF_RESET) resets the data interface. In multidevice configuration, this bit synchronizes data channel outputs to achieve device to device channel phase matching. This bit is self clearing and only available for use in SPI slave mode operation. Refer to the Multidevice Synchronization section.

MINIMUM I/O MODE

Certain applications require a minimum number of I/O lines to be used for interfacing with the AD7134. This requirement may be due to the limited number of I/Os available on the digital host, or for cost reasons, to minimize the number of digital isolation channels required in an isolated application.

The AD7134 is designed to support both register and data access using as few as only four unidirectional I/O lines.

The minimum I/O mode configuration essentially combines the register and data access interface on the AD7134 and allows the digital host to interface with the AD7134 with only one SPI port as master.

The trade-off of minimizing the number of I/O ports is more complicated firmware design and a potentially higher CPU processing load.

On power-on, the AD7134 boots up in minimum I/O mode and a toggle on $\overline{CS}$ pin makes the device exit the minimum I/O mode. Also, SPI CRC is enabled in minimum I/O mode and cannot be disabled. All SPI packets must be 24 bits, which is R/W + Address (8-bit), data (8-bit), and CRC (8-bit), as described in Figure 114. To configure the AD7134 to operate with a minimum number of IO lines, perform the following sequence:

1. Connect the FORMAT0/$\overline{CS}$ pin to ground.
2. Externally connect DCLK to the FORMAT1/SCLK pin.
3. Configure DCLK to be a gated input.
4. Set ASRC slave mode.
5. Set FORMATx to 00 wherein data from all four ADC channels are converged and output through DOUT0.
6. Set the SDO_PIN_SRC_SEL bit to 1.

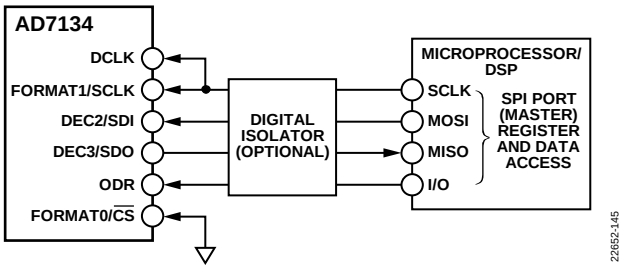

Figure 122. Signal Connection Diagram of Minimum I/O Configuration

In minimum I/O mode, the user can use the DEC3/SDO pin for both register content and ADC conversion data readback. Only one of the SDO and DOUT0 outputs are allowed to be enabled at any given time. Setting the SDO_PIN_SRC_SEL bit to 1 causes the signal on DOUT0 to be duplicated on the DEC3/SDO pin.

DIAGNOSTICS

The AD7134 has numerous diagnostic functions on chip that monitor and report errors for the following functional blocks:

- Internal fuses
- Analog input range
- MCLK frequency
- SPI communication
- Memory map value
- ODR input frequency
- Digital filters

In SPI control mode, the user can enable or disable the following diagnostic features through the diagnostic control register:

- Fuse cyclic redundancy check (CRC)
- Memory map CRC
- SPI CRC
- MCLK counter
- Analog input range

Figure 123 shows all the different types of blocks monitored, as well as blocks that are enabled using the diagnostic control register.

The remaining diagnostic features run continuously on the device and all the bits except the NO_CHIP_ERR bit are cleared on a read.

As shown in Figure 123, the NO_CHIP_ERR bit in the device configuration register is the master error status bit. This bit is cleared if any of the other status error bits are set. This bit sets back to 1 when all the status bits are cleared, indicating no chip error.

INTERNAL FUSE INTEGRITY CHECK

The AD7134 uses a fuse type memory to store the factory programmed calibration values that are unique to each device. When leaving the factory, a CRC code is calculated based on the final fuse values of the device and is stored in the device memory.

On each power-up, the device reads the fuse memory for self configuration. The device also performs a CRC calculation based on the fuse values read and compares the calculation against the factory programmed value to detect a fuse reading error.

The device sets the ERR_FUSE_CRC bit if a fuse CRC error is detected.

The user can also initiate a fuse check by using the FUSE_CRC_CHECK bit in the diagnostic control register. This bit is cleared when the check is complete. When this check is executed, the data output is interrupted.

The fuse CRC supports 1-bit error correction. The device tries to correct the error when detected. The AD7134 sets the STAT_FUSE_ECC bit if the error is corrected and sets the ERR_FUSE_CRC bit if the fuse CRC error correction is not completed.

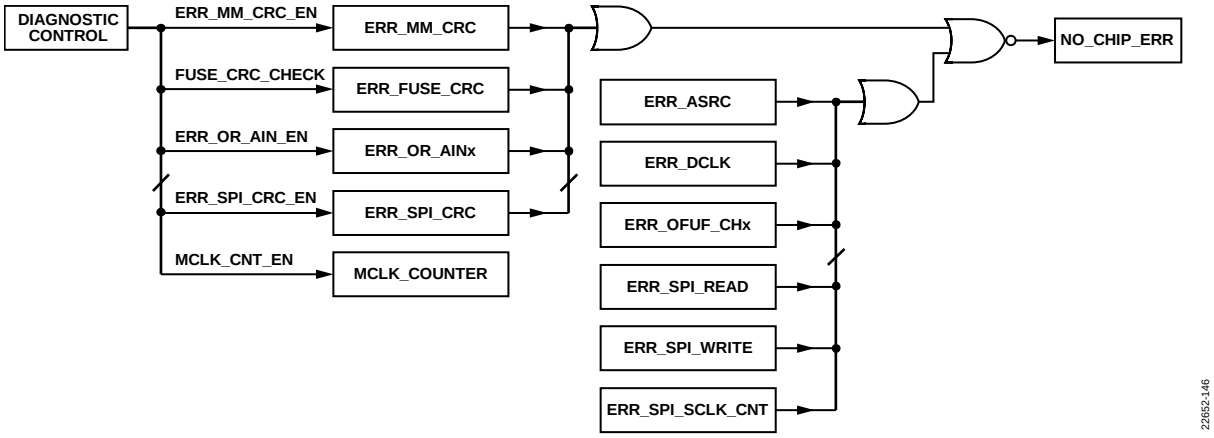

Figure 123. Errors

ANALOG INPUT OVERRANGE

An on-chip, full-scale overrange detection monitor flags a bit on detection of a positive full-scale input voltage between the AINx+ pins and AINx− pins. This detection is enabled on each channel by using the ERR_OR_AIN_EN bit in the diagnostic control register, and an overvoltage bit corresponding to the particular channel is set if the voltage exceeds the full scale corresponding to that channel.

Four overvoltage flags in the AIN_OR_ERROR register corresponding to the four input channels are cleared on a read.

MCLK COUNTER

A stable MCLK is important because the output data rate, filter settling time, and the filter notch frequencies are dependent on the master clock. The AD7134 allows the user to monitor the master clock. When the MCLK_CNT_EN bit in the diagnostic control register is set, the MCLK_COUNTER register increments by one every 12,000 master clock cycles. The user can monitor this register over a fixed period by running a timer in the controller, and the master clock frequency can be determined from the result in the MCLK_COUNTER register.

$$MCLK = Register\ Data \times 12{,}000/Timer\ Value$$

where *Register Data* is in decimal format.

For example, if MCLK is 24 MHz and the timer is set to 100 ms, the expected MCLK_COUNTER value is 0xC8. This register wraps around after it reaches its maximum value.

SPI INTERFACE MONITORING

The AD7134 supports a number of diagnostic measures to improve the robustness of its SPI interface.

Accessing Undefined Register Address

When the user tries to access an undefined register address, the device ignores the instruction and flags an error in the ERR_SPI_READ bit or the ERR_SPI_WRITE bit. These bits are cleared on a read.

SCLK Counter

The AD7134 uses an SCLK counter to count the number of SCLK cycles supplied in each of the read and write transactions framed by the $\overline{CS}$ signal. The device flags an error in the ERR_SPI_SCLK_CNT bit if the number of SCLK cycles at the end of each SPI transaction is not an integer multiple of 8. This bit is cleared on a read. The SCLK counter is not available in minimum I/O mode.

SPI CRC

When the ERR_SPI_CRC_EN bit in the diagnostic control register is set, a CRC check for all SPI read and write operations is enabled. The ERR_SPI_CRC bit in the SPI error register is set if the CRC check fails. This bit is cleared on a read.

For CRC checksum calculations, the polynomial used is $x^8 + x^2 + x + 1$ and has a reset seed of 0xA5.

The 8-bit checksum is appended to the end of each read and write transaction. The checksum calculation for the write transaction is calculated using the 8-bit command word and data. For a read transaction, the checksum is calculated using the command word and the data output.

For write or read operation, the host sends the R/W bit, the address (eight bits), the data (eight bits), and the 8-bit CRC (on R/W, address, and data).

In a write operation, while the host is sending the CRC on the SDI line, the slave simultaneously transmits the CRC calculated on the write + address + data that the slave has received. The slave executes a write operation only when the received CRC sent by the host matches with its calculated CRC. The slave sends a 1-bit status followed by 15 zeros and the 8-bit CRC (see Figure 124).

Figure 124. SPI Write with CRC

In a read operation, while the host is sending the CRC on the SDI line, the slave simultaneously transmits the CRC calculated on the command and the read data. The slave sends a 1-bit status followed by seven zeros, 8-bit read data, and 8-bit CRC (see Figure 125).

The 1-bit status sent by the slave is the error bit, which indicates that the previous frame had a read, write, or CRC error.

Figure 125. SPI Read with CRC

MEMORY MAP INTEGRITY CHECK

When the ERR_MM_CRC_EN bit is set in the diagnostic control register, a CRC of the data from all the on-board registers with write access is calculated and the results are stored in memory. The device then continuously performs the CRC calculation at a frequency of 2.4 kHz, and compares each output with the CRC value stored in memory. The device sets the ERR_MM_CRC bit if the two values are different. This bit is cleared on a read. The CRC value stored in the memory is also recalculated after each SPI write transaction.

This feature is useful for detecting a soft error in the memory map.

ODR INPUT FREQUENCY CHECK

An ODR input frequency check applies only to device operation in ASRC slave mode.

The device checks the input ODR signal frequency after the PLL locks and sets the ERR_ASRC bit if the ODR frequency detected is outside the range for the particular type of filter selected as specified in Table 19. This bit is cleared on a read.

For example, if the ODR input is set to 600 kSPS and the type of filter set is wideband, this error is flagged. There is no data output in this scenario.

DIGITAL FILTER OVERFLOW AND UNDERFLOW

The digital filter overflow/underflow occurs when the input is overrange or due to an incorrect setting of the gain and calibration register. The AD7134 monitors the digital filter path and sets the corresponding channel bit in the DIG_FILTER_OFUF register when an overflow or underflow condition is detected.

For proper usage of this diagnostic feature, it is recommended to read back these flags after power-up.

DCLK ERROR

The device has a built in feature to flag insufficient numbers of data clocks needed to clock out the complete frame.

The user must program or provide a data clock that is fast enough to clock out the complete frame for the given ODR and ensure that for the gated mode,

$ODR\ Time > t_{DCLK} \times Frame\ Size + 6 \times t_{DCLK}/t_{DIGCLK}$ (whichever is higher)

And for free mode,

$ODR\ Time > t_{DCLK} \times Frame\ Size + 4 \times t_{DCLK}/t_{DIGCLK}$ (whichever is higher) (1)

The ERR_DCLK flag sets if the programmed or provided DCLK frequency is such that Equation 1 is not met, resulting in an insufficient number of data clocks to clock out the entire frame. This bit is cleared on a read.

GPIO FUNCTIONALITY

The AD7134 has additional GPIO functionality when operated in SPI control mode. This fully configurable mode allows the device to operate eight GPIOs, thus making the AD7134 work as an SPI-based GPIO expander. The GPIO pins can be set as inputs or outputs (read or write) on a per pin basis.

In write mode, these GPIO pins can be used to control other circuits such as switches, amplifiers, multiplexers, and buffers over the same SPI interface as the AD7134. Sharing the SPI interface in this way allows the user to use a lower overall number of data lines from the controller, compared to a system where multiple control signals are required. This sharing is especially useful in systems where reducing the number of control lines across an isolation barrier is important. Similarly, a GPIO read is a useful feature because it allows a peripheral device to send information to the input GPIO and then this information can be read from the SPI interface of the AD7134.

The GPIO pins can be used as general-purpose inputs or outputs. The GPIO_DIR_CTRL register configures the individual pin as an input or output. The GPIO_DATA register reflects the status of the pins when configured as inputs or the user can write to this register to set the pins when configured as outputs (see Figure 126).

PIN ERROR REPORTING

Additionally, GPIO7 can be used as an output to report any of the diagnostic errors by enabling Bit ERR_PIN_OUT_EN. Register ERROR_PIN_SRC_CONTROL controls the type of errors that can be reported on this pin. If multiple types are selected, the output is a logical OR of all the selected errors.

GPIO6 can be used as an error input from any other device by enabling the ERR_PIN_IN_EN bit. The status of this bit can be read using the ERR_PIN_IN_STATUS bit.

The GPIO7 output is a logical OR of all the selected errors, as per the ERROR_PIN_SRC_CONTROL register and the ERR_PIN_IN_STATUS bit.

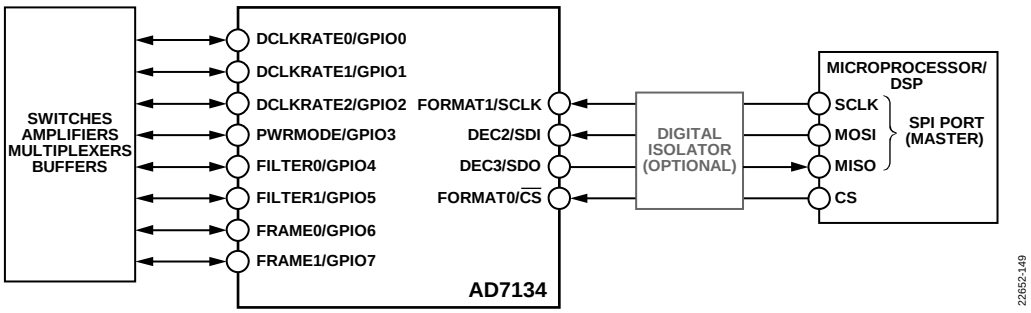

Figure 126. AD7134 as SPI GPIO Expander

REGISTER MAP (SPI CONTROL)

See Table 38 for the register map for the device (SPI control).

Table 38. Register Map

Reg	Name	Bit 7	Bit 6	Bit 5	Bit 4	Bit 3	Bit 2	Bit 1	Bit 0	Reset	RW
0x0	INTERFACE_ CONFIG_A	SOFT_ RESET	Reserved	ADDRESS_ ASCENSION_BIT	SDO_ ACTIVE_ BIT	SDO_ ACTIVE_ BIT_ MIRROR	ADDRESS_ ASCENSION_ BIT_MIRROR	Reserved	SOFT_ RESET_ MIRROR	0x18	R/W
0x1	INTERFACE_ CONFIG_B	SINGLE_ INSTR	Reserved	MASTER_ SLAVE_ RD_CTRL	Reserved			DIG_IF_ RESET	Reserved	0x80	R/W
0x2	DEVICE_CONFIG	Reserved		OP_IN_ PROGRESS	NO_CHIP_ ERR	Reserved			POWER_ MODE	0xD0	R/W
0x3	CHIP_TYPE	CHIP_TYPE								0x07	R
0x4	PRODUCT_ID_LSB	PRODUCT_ID[7:0]								N/A[1]	R
0x5	PRODUCT_ID_MSB	PRODUCT_ID[15:8]								N/A[1]	R
0x6	CHIP_GRADE	PRODUCT_GRADE				DEVICE_VERSION				0x00	R
0x7	SILICON_REV	SILICON_REVISION_ID								0x02	R
0xA	SCRATCH_PAD	SCRATCH_PAD								0x00	R/W
0xB	SPI_REVISION	SPI_REVSION_NUMBER								0x02	R
0xC	VENDOR_ID_LSB	VENDOR_ID[7:0]								0x56	R
0xD	VENDOR_ID_MSB	VENDOR_ID[15:8]								0x04	R
0xE	STREAM_MODE	STREAM_MODE_BITS								0x00	R/W
0xF	TRANSFER_REGISTER	Reserved							MASTER_ SLAVE_ TX_BIT	0x00	R/W
0x10	DEVICE_CONFIG_1	Reserved				AA_MODE	SDO_PIN_ SRC_SEL	REFIN_ GAIN_ CORR_EN	XCLKOUT_ EN	0x00	R/W
0x11	DATA_PACKET_ CONFIG	CRC_ POLY_ RST_SEL	Reserved	Frame		DCLK_FREQ_SEL				0x00	R/W
0x12	DIGITAL_INTERFACE_ CONFIG	DAISY_CHAIN_DEV_NUM				AVG_SEL		Format		0x00	R/W
0x13	POWER_DOWN_ CONTROL	Reserved	PWRDN_ CH3	PWRDN_CH2	PWRDN_ CH1	PWRDN_ CH0	Reserved	PWRDN_ LDO	SLEEP_ MODE_EN	0x00	R/W
0x14	RESERVED	Reserved								0x00	R/W
0x15	DEVICE_STATUS	Reserved		STAT_ DCLKMODE	STAT_ DCLKIO	STAT_ MODE	STAT_ CLKSEL	STAT_ FUSE_ECC	STAT_ PLL_LOCK	0x00	R
0x16	ODR_VAL_INT_LSB	ODR_VAL_INT[7:0]								0x40	R/W
0x17	ODR_VAL_INT_MID	ODR_VAL_INT[15:8]								0x00	R/W
0x18	ODR_VAL_INT_MSB	ODR_VAL_INT[23:16]								0x00	R/W
0x19	ODR_VAL_FLT_LSB	ODR_VAL_FLT[7:0]								0x72	R/W
0x1A	ODR_VAL_FLT_MID0	ODR_VAL_FLT[15:8]								0xB7	R/W
0x1B	ODR_VAL_FLT_MID1	ODR_VAL_FLT[23:16]								0xCE	R/W
0x1C	ODR_VAL_FLT_MSB	ODR_VAL_FLT[31:24]								0x2B	R/W
0x1D	CHANNEL_ODR_ SELECT	ODR_RATE_SEL_CH3		ODR_RATE_SEL_CH2		ODR_RATE_SEL_CH1		ODR_RATE_SEL_CH0		0x00	R/W
0x1E	CHAN_DIG_FILTER_ SEL	DIGFILTER_SEL_CH3		DIGFILTER_SEL_CH2		DIGFILTER_SEL_CH1		DIGFILTER_SEL_CH0		0x00	R/W
0x1F	FIR_BW_SEL	Reserved				WB_ FILTER_ SEL_CH3	WB_FILTER_ SEL_CH2	WB_FILTER_ SEL_CH1	WB_ FILTER_ SEL_CH0	0x00	R/W
0x20	GPIO_DIR_CTRL	GPIO_IO_CONTROL								0x00	R/W
0x21	GPIO_DATA	GPIO_DATA								0x00	R/W
0x22	ERROR_PIN_SRC_ CONTROL	Reserved		ERR_PIN_ EN_OR_AIN	ERR_PIN_ EN_ INTERNAL	ERR_PIN_ EN_SPI	Reserved			0x00	R/W
0x23	ERROR_PIN_ CONTROL	Reserved					ERR_PIN_ IN_STATUS	ERR_PIN_ IN_EN	ERR_PIN_ OUT_EN	0x00	R/W
0x24	VCMBUF_CTRL	Reserved	PWRDN_ VCMBUF	VCMBUF_REF_DIV_SEL					VCMBUF_ REF_SEL	0x00	R/W
0x25	Diagnostic Control	Reserved		ERR_OR_ AIN_EN	Reserved	MCLK_ CNT_EN	ERR_SPI_ CRC_EN	ERR_MM_ CRC_EN	FUSE_ CRC_CHECK	0x00	R/W

Reg	Name	Bit 7	Bit 6	Bit 5	Bit 4	Bit 3	Bit 2	Bit 1	Bit 0	Reset	RW
0x26	MPC_CONFIG	MPC_CLKDEL_EN_CH3		MPC_CLKDEL_EN_CH2		MPC_CLKDEL_EN_CH1		MPC_CLKDEL_EN_CH0		0x00	R/W
0x27	CH0_GAIN_LSB	GAIN_CH0[7:0]								0x00	R/W
0x28	CH0_GAIN_MID	GAIN_CH0[15:8]								0x00	R/W
0x29	CH0_GAIN_MSB	Reserved			GAIN_CAL_SEL_CH0	GAIN_CH0[19:16]				0x00	R/W
0x2A	CH0_OFFSET_LSB	OFFSET_CH0[7:0]								0x00	R/W
0x2B	CH0_OFFSET_MID	OFFSET_CH0[15:8]								0x00	R/W
0x2C	CH0_OFFSET_MSB	OFFSET_CAL_EN_CH0	OFFSET_CH0[22:16]							0x00	R/W
0x2D	CH1_GAIN_LSB	GAIN_CH1[7:0]								0x00	R/W
0x2E	CH1_GAIN_MID	GAIN_CH1[15:8]								0x00	R/W
0x2F	CH1_GAIN_MSB	Reserved			GAIN_CAL_SEL_CH1	GAIN_CH1[19:16]				0x00	R/W
0x30	CH1_OFFSET_LSB	OFFSET_CH1[7:0]								0x00	R/W
0x31	CH1_OFFSET_MID	OFFSET_CH1[15:8]								0x00	R/W
0x32	CH1_OFFSET_MSB	OFFSET_CAL_EN_CH1	OFFSET_CH1[22:16]							0x00	R/W
0x33	CH2_GAIN_LSB	GAIN_CH2[7:0]								0x00	R/W
0x34	CH2_GAIN_MID	GAIN_CH2[15:8]								0x00	R/W
0x35	CH2_GAIN_MSB	Reserved			GAIN_CAL_SEL_CH2	GAIN_CH2[19:16]				0x00	R/W
0x36	CH2_OFFSET_LSB	OFFSET_CH2[7:0]								0x00	R/W
0x37	CH2_OFFSET_MID	OFFSET_CH2[15:8]								0x00	R/W
0x38	CH2_OFFSET_MSB	OFFSET_CAL_EN_CH2	OFFSET_CH2[22:16]							0x00	R/W
0x39	CH3_GAIN_LSB	GAIN_CH3[7:0]								0x00	R/W
0x3A	CH3_GAIN_MID	GAIN_CH3[15:8]								0x00	R/W
0x3B	CH3_GAIN_MSB	Reserved			GAIN_CAL_SEL_CH3	GAIN_CH3[19:16]				0x00	R/W
0x3C	CH3_OFFSET_LSB	OFFSET_CH3[7:0]								0x00	R/W
0x3D	CH3_OFFSET_MID	OFFSET_CH3[15:8]								0x00	R/W
0x3E	CH3_OFFSET_MSB	OFFSET_CAL_EN_CH3	OFFSET_CH3[22:16]							0x00	R/W
0x3F	MCLK_COUNTER	MCLK_COUNT								0x00	R
0x40	DIG_FILTER_OFUF	Reserved				ERR_OFUF_CH3	ERR_OFUF_CH2	ERR_OFUF_CH1	ERR_OFUF_CH0	0x00	R
0x41	DIG_FILTER_SETTLED	Reserved				CH3_SETTLED	CH2_SETTLED	CH1_SETTLED	CH0_SETTLED	0x00	R
0x42	INTERNAL_ERROR	Reserved				ERR_DCLK	ERR_FUSE_CRC	ERR_ASRC	ERR_MM_CRC	0x00	R
0x47	SPI Error	Reserved				ERR_SPI_CRC	ERR_SPI_SCLK_CNT	ERR_SPI_WRITE	ERR_SPI_READ	0x00	R
0x48	AIN_OR_ERROR	Reserved				ERR_OR_AIN3	ERR_OR_AIN2	ERR_OR_AIN1	ERR_OR_AIN0	0x00	R

[1] N/A means not applicable. The reset value is time stamp dependent and programmed in production.

REGISTER DETAILS

Address: 0x0, Reset: 0x18, Name: INTERFACE_CONFIG_A

Table 39. Bit Descriptions for INTERFACE_CONFIG_A

Bits	Bit Name	Settings	Description	Reset	Access
7	SOFT_RESET		Soft Reset of the Device. This bit is cleared on completion of a reset.	0x0	R/W
		0	Default.		
		1	Initiates a soft reset.		
6	Reserved		Reserved.	0x0	R
5	ADDRESS_ASCENSION_BIT		Register Map Address Ascension/Descend Control. Used in conjunction with streaming mode, address ascension causes sequential register addresses to ascend in order. Disabling causes sequential register addresses to descend in order.	0x0	R/W
		0	Sequential register address in descending order.		
		1	Sequential register address in ascending order.		
4	SDO_ACTIVE_BIT		SDO Control.	0x1	R/W
		0	SDO disabled, exhibit high impedance.		
		1	SDO enabled.		
3	SDO_ACTIVE_BIT_MIRROR		Mirror Image of SDO_ACTIVE_BIT.	0x1	R
2	ADDRESS_ASCENSION_BIT_MIRROR		Mirror Image of ADDRESS_ASCENTION_BIT.	0x0	R
1	Reserved		Reserved.	0x0	R
0	SOFT_RESET_MIRROR		Mirror Image of SOFT_RESET.	0x0	R/W
		0	Default.		
		1	Initiates a soft reset.		

Address: 0x1, Reset: 0x80, Name: INTERFACE_CONFIG_B

Table 40. Bit Descriptions for INTERFACE_CONFIG_B

Bits	Bit Name	Settings	Description	Reset	Access
7	SINGLE_INSTR		Single Instruction Mode Control. When set, this bit disables streaming regardless of the state of $\overline{CS}$. When clear, streaming is enabled.	0x1	R/W
		0	Disable.		
		1	Enable.		
6	Reserved		Reserved.	0x0	R
5	MASTER_SLAVE_RD_CTRL		Master Slave Readback Control. Determines the data to read back from the master or slave buffered bits (ODR_VAL_INT_x and ODR_VAL_FLT_x). Set to 1 to read back from master output. Clear this bit to read back from slave output.	0x0	R/W
		0	Readback of the slave flip flop outputs.		
		1	Readback of the master flip flop outputs.		
[4:2]	Reserved		Reserved.	0x0	R
1	DIG_IF_RESET		Digital Interface Reset.	0x0	R/W
0	Reserved		Reserved.	0x0	R/W

Address: 0x2, Reset: 0xD0, Name: DEVICE_CONFIG

Table 41. Bit Descriptions for DEVICE_CONFIG

Bits	Bit Name	Settings	Description	Reset	Access
[7:6]	Reserved		Reserved.	0x3	R
5	OP_IN_PROGRESS		Operation in Progress Indicator. A readback value of 0 indicates that the device is busy.	0x0	R
		0	Some operation in progress.		
		1	No operation in progress.		

Bits	Bit Name	Settings	Description	Reset	Access
4	NO_CHIP_ERR		Error Flag for all of the Enabled Status Errors. This bit is the OR of all the enabled error bits and continues to stay clear as long as any error flag is set.	0x1	R
		0	Device has a chip error.		
		1	No chip error.		
[3:1]	Reserved		Reserved.	0x0	R
0	POWER_MODE		Device Power Mode Control.	0x0	R/W
		0	Low power mode.		
		1	High performance mode.		

Address: 0x3, Reset: 0x07, Name: CHIP_TYPE

Table 42. Bit Descriptions for CHIP_TYPE

Bits	Bit Name	Settings	Description	Reset	Access
[7:0]	CHIP_TYPE		Code to Indicate the Type of Device. Read 0x07 to confirm for precision ADC.	0x7	R

Address: 0x4, Reset: 0x00, Name: PRODUCT_ID_LSB

Table 43. Bit Descriptions for PRODUCT_ID_LSB

Bits	Bit Name	Settings	Description	Reset	Access
[7:0]	PRODUCT_ID[7:0]		Product ID.	Not applicable[1]	R

[1] Reset value is time stamp dependent and programmed in production.

Address: 0x5, Reset: 0x00, Name: PRODUCT_ID_MSB

Table 44. Bit Descriptions for PRODUCT_ID_MSB

Bits	Bit Name	Settings	Description	Reset	Access
[7:0]	PRODUCT_ID[15:8]		Product ID.	Not applicable[1]	R

[1] Reset value is time stamp dependent and programmed in production.

Address: 0x6, Reset: 0x00, Name: CHIP_GRADE

Table 45. Bit Descriptions for CHIP_GRADE

Bits	Bit Name	Settings	Description	Reset	Access
[7:4]	PRODUCT_GRADE		Grade of the Device.	0x0	R
[3:0]	DEVICE_VERSION		Device Version.	0x0	R

Address: 0x7, Reset: 0x02, Name: SILICON_REV

Table 46. Bit Descriptions for SILICON_REV

Bits	Bit Name	Settings	Description	Reset	Access
[7:0]	SILICON_REVISION_ID		Stores the Revision Number of the Current Silicon.	0x2	R

Address: 0xA, Reset: 0x00, Name: SCRATCH_PAD

Table 47. Bit Descriptions for SCRATCH_PAD

Bits	Bit Name	Settings	Description	Reset	Access
[7:0]	SCRATCH_PAD		Scratch Pad for Checking SPI Read and Write Operation.	0x0	R/W

Address: 0xB, Reset: 0x02, Name: SPI_REVISION

Table 48. Bit Descriptions for SPI_REVISION

Bits	Bit Name	Settings	Description	Reset	Access
[7:0]	SPI_REVSION_NUMBER		Indicate the Revision Number of the SPI Protocol.	0x2	R

Address: 0xC, Reset: 0x56, Name: VENDOR_ID_LSB

Table 49. Bit Descriptions for VENDOR_ID_LSB

Bits	Bit Name	Settings	Description	Reset	Access
[7:0]	VENDOR_ID[7:0]		Vendor ID.	0x56	R

Address: 0xD, Reset: 0x04, Name: VENDOR_ID_MSB

Table 50. Bit Descriptions for VENDOR_ID_MSB

Bits	Bit Name	Settings	Description	Reset	Access
[7:0]	VENDOR_ID[15:8]		Vendor ID.	0x4	R

Address: 0xE, Reset: 0x00, Name: STREAM_MODE

Table 51. Bit Descriptions for STREAM_MODE

Bits	Bit Name	Settings	Description	Reset	Access
[7:0]	STREAM_MODE_BITS		Defines the Depth of the Loop for User Stream Mode.	0x0	R/W

Address: 0xF, Reset: 0x00, Name: TRANSFER_REGISTER

Table 52. Bit Descriptions for TRANSFER_REGISTER

Bits	Bit Name	Settings	Description	Reset	Access
[7:1]	Reserved		Reserved.	0x0	R
0	MASTER_SLAVE_TX_BIT		Master Slave Transfer Bit. When this bit is set, data is entered into the master registers transferred to the slave. Upon completion of the transfer, the slave device clears this bit (autoclears), indicating to the SPI master that the transfer was complete and the slave data can be read back if desired by the control program. Prior to a transfer, an attempted readback views the prior data unless Bit 5 of Register 0x1 (MASTER_SLAVE_RD_CTRL) is set. In that case, the master data is accessed. Another method to invoke the transfer is to use the $\overline{CS}$ low to high transition.	0x0	R/W

Address: 0x10, Reset: 0x00, Name: DEVICE_CONFIG_1

Table 53. Bit Descriptions for DEVICE_CONFIG_1

Bits	Bit Name	Settings	Description	Reset	Access
[7:4]	Reserved		Reserved, is always zero.	0x0	R/W
3	AA_MODE		Sets Inherent Antialiasing Mode.	0x0	R/W
		0	AA1 mode.		
		1	AA2 mode.		
2	SDO_PIN_SRC_SEL		DEC3/SDO Pin Signal Source Selection. In minimum I/O mode, the user can use the DEC3/SDO pin for both register content and ADC conversion data readback.	0x0	R/W
		0	DEC3/SDO pin acts as SPI serial data output.		
		1	Signal on DOUT0 is duplicated on DEC3/SDO pin.		
1	REFIN_GAIN_CORR_EN		Enables Reference Gain Correction.	0x0	R/W
		0	Reference gain correction disabled.		
		1	Reference gain correction enabled.		
0	XCLKOUT_EN		XCLKOUT Output Enable Control.	0x0	R/W
		0	XCLKOUT disabled.		
		1	XCLKOUT enabled.		

Address: 0x11, Reset: 0x00, Name: DATA_PACKET_CONFIG

Table 54. Bit Descriptions for DATA_PACKET_CONFIG

Bits	Bit Name	Settings	Description	Reset	Access
7	CRC_POLY_RST_SEL		Data Interface CRC Reset Method Selection.	0x0	R/W
		0	The data interface CRC is reset with default seed value at the end of every data frame.		
		1	The data interface CRC does not reset at the end of each data frame. The CRC value calculated from the proceeding data frame seeds the CRC calculation of the current data frame.		
6	Reserved		Reserved	0x0	R

Bits	Bit Name	Settings	Description	Reset	Access
[5:4]	Frame		ADC Conversion Data Output Frame Control.	0x0	R/W
		0	16-bit ADC data only.		
		1	16-bit ADC data followed by 6-bit CRC.		
		10	24-bit ADC data only.		
		11	24-bit ADC data followed by 6-bit CRC.		
[3:0]	DCLK_FREQ_SEL		Controls DCLK Output Frequency.	0x0	R/W
		0	f_{DCLK} = 48 MHz.		
		1	f_{DCLK} = 24 MHz.		
		10	f_{DCLK} = 12 MHz.		
		11	f_{DCLK} = 6 MHz.		
		100	f_{DCLK} = 3 MHz.		
		101	f_{DCLK} = 1.5 MHz.		
		110	f_{DCLK} = 750 kHz.		
		111	f_{DCLK} = 375 kHz.		
		1000	f_{DCLK} = 187.5 kHz.		
		1001	f_{DCLK} = 93.75 kHz.		
		1010	f_{DCLK} = 46.875 kHz.		
		1011	f_{DCLK} = 23.4375 kHz.		
		1100	f_{DCLK} = 11.71875 kHz.		
		1101	f_{DCLK} = 5.859 kHz.		
		1110	f_{DCLK} = 2.929 kHz.		
		1111	f_{DCLK} = 1.464 kHz.		

Address: 0x12, Reset: 0x00, Name: DIGITAL_INTERFACE_CONFIG

Table 55. Bit Descriptions for DIGITAL_INTERFACE_CONFIG

Bits	Bit Name	Settings	Description	Reset	Access
[7:4]	DAISY_CHAIN_DEV_NUM		Sets the Number of Devices Connected in a Daisy-Chain Configuration. This register is only applicable to a device set to output DCLK to other devices in a daisy-chain configuration. The register value acts as a clock cycle multiplier in DCLK output configuration. For example, setting the daisy-chain device number to two doubles the number of DCLK cycles output per ODR cycle.	0x0	R/W
		0	Only one device is used.		
		1	2 devices are in daisy-chain configuration.		
		10	3 devices are in daisy-chain configuration.		
		11	4 devices are in daisy-chain configuration.		
		100	5 devices are in daisy-chain configuration.		
		101	6 devices are in daisy-chain configuration.		
		110	7 devices are in daisy-chain configuration.		
		111	8 devices are in daisy-chain configuration.		
		1000	9 devices are in daisy-chain configuration.		
		1001	10 devices are in daisy-chain configuration.		
		1010	11 devices are in daisy-chain configuration.		
		1011	12 devices are in daisy-chain configuration.		
		1100	13 devices are in daisy-chain configuration.		
		1101	14 devices are in daisy-chain configuration.		
		1110	15 devices are in daisy-chain configuration.		
		1111	16 devices are in daisy-chain configuration.		

Bits	Bit Name	Settings	Description	Reset	Access
[3:2]	AVG_SEL		Multichannel ADC Conversion Data Averaging Control.	0x0	R/W
		0	Data from all four channels are averaged and output on DOUT0. DOUT2 acts as daisy-chain input. DOUT1 and DOUT3 are disabled.		
		1	Data from Channel 0 and Channel 1 are averaged and output on DOUT0. DOUT1 is disabled. Channel 2 and Channel 3 are under normal operation.		
		10	Data from Channel 2 and Channel 3 are averaged and output on DOUT2. DOUT3 is disabled. Channel 0 and Channel 1 are under normal operation.		
		11	Data from Channel 0 and Channel 1 are averaged and output on DOUT0. Data from Channel 2 and Channel 3 are averaged and output on DOUT1. DOUT2 and DOUT3 act as daisy-chain inputs.		
[1:0]	Format		DOUTx Output Format Configuration.	0x0	R/W
		0	Single-channel daisy-chain mode. DOUT0 acts as an output and DOUT2 acts as a daisy-chain input. DOUT1 and DOUT3 are disabled. Data from all four ADC channels are output on DOUT0.		
		1	Dual-channel daisy-chain mode. DOUT0 and DOUT1 act as output and DOUT2 and DOUT3 act as daisy-chain input. Data from Channel 0 and Channel 1 are output on DOUT0. Data from Channel 2 and Channel 3 are output on DOUT1.		
		10	Quad channel parallel output mode. Each ADC channel has a dedicated data output pin.		
		11	Channel data averaging mode, averaging operation is defined by AVG_SEL.		

Address: 0x13, Reset: 0x00, Name: POWER_DOWN_CONTROL

Table 56. Bit Descriptions for POWER_DOWN_CONTROL

Bits	Bit Name	Settings	Description	Reset	Access
7	Reserved		Reserved.	0x0	R
6	PWRDN_CH3		Powers Down Analog Input Channel 3.	0x0	R/W
		0	Power up.		
		1	Power down.		
5	PWRDN_CH2		Powers Down Analog Input Channel 2.	0x0	R/W
		0	Power up.		
		1	Power down.		
4	PWRDN_CH1		Powers Down Analog Input Channel 1.	0x0	R/W
		0	Power up.		
		1	Power down.		
3	PWRDN_CH0		Powers Down Analog Input Channel 0.	0x0	R/W
		0	Power up.		
		1	Power down.		
2	Reserved		Reserved.	0x0	R
1	PWRDN_LDO		Powers Down the Internal Analog and Clock LDO Regulators.	0x0	R/W
		0	Internal LDO regulators powered.		
		1	Internal LDO regulators powered down.		
0	SLEEP_MODE_EN		All Blocks Except Digital LDO Regulator are Turned Off. On-chip register contents remain the same.	0x0	R/W
		0	Sleep mode disabled.		
		1	Sleep mode enabled.		

Address: 0x14, Reset: 0x00, Name: RESERVED

Table 57. Bit Descriptions for RESERVED

Bits	Bit Name	Settings	Description	Reset	Access
[7:0]	Reserved		Reserved. Always zero.	0x0	R/W

Address: 0x15, Reset: 0x00, Name: DEVICE_STATUS

Table 58. Bit Descriptions for DEVICE_STATUS

Bits	Bit Name	Settings	Description	Reset	Access
[7:6]	Reserved		Reserved.	0x0	R
5	STAT_DCLKMODE		DEC1/DCLKMODE Pin Status Indicates if DCLK is in Free Running or Gated Mode.	0x0	R
		0	DCLK is in gated mode. Compatible with SPI interface.		
		1	DCLK is in free running mode.		
4	STAT_DCLKIO		DEC0/DCLKIO Pin Status Indicates DCLK Pin Direction.	0x0	R
		0	DCLK is input.		
		1	DCLK is output.		
3	STAT_MODE		MODE Pin Status Indicates Whether Device is Master or Slave.	0x0	R
		0	Slave mode: ODR is input.		
		1	Master mode: ODR is output.		
2	STAT_CLKSEL		CLKSEL Pin Status Indicates the Clock Source.	0x0	R
		0	CMOS input clock is connected.		
		1	Crystal input is connected.		
1	STAT_FUSE_ECC		Status Bit that Indicates Application of Fuse Error Correction Code. This bit is cleared on is read.	0x0	R
		0	Error code correction not applied.		
		1	Error code correction applied.		
0	STAT_PLL_LOCK		PLL Status in Slave Mode. Indicates if PLL has locked or not. Setting this bit indicates PLL is locked.	0x0	R
		0	PLL not locked.		
		1	PLL locked.		

Address: 0x16, Reset: 0x40, Name: ODR_VAL_INT_LSB

Table 59. Bit Descriptions for ODR_VAL_INT_LSB

Bits	Bit Name	Settings	Description	Reset	Access
[7:0]	ODR_VAL_INT[7:0]		Integer Portion of Decimation Rate. Decimation rate is the ratio of MCLK to ODR. In master mode, the user can program this register to set the ODR output frequency based on the MCLK frequency.	0x40	R/W

Address: 0x17, Reset: 0x00, Name: ODR_VAL_INT_MID

Table 60. Bit Descriptions for ODR_VAL_INT_MID

Bits	Bit Name	Settings	Description	Reset	Access
[7:0]	ODR_VAL_INT[15:8]		Integer Portion of Decimation Rate. Decimation rate is the ratio of MCLK to ODR. In master mode, the user can program this register to set the ODR output frequency based on the MCLK frequency.	0x0	R/W

Address: 0x18, Reset: 0x00, Name: ODR_VAL_INT_MSB

Table 61. Bit Descriptions for ODR_VAL_INT_MSB

Bits	Bit Name	Settings	Description	Reset	Access
[7:0]	ODR_VAL_INT[23:16]		Integer Portion of Decimation Rate. Decimation rate is the ratio of MCLK to ODR. In master mode, the user can program this register to set the ODR output frequency based on the MCLK frequency.	0x0	R/W

Address: 0x19, Reset: 0x72, Name: ODR_VAL_FLT_LSB

Table 62. Bit Descriptions for ODR_VAL_FLT_LSB

Bits	Bit Name	Settings	Description	Reset	Access
[7:0]	ODR_VAL_FLT[7:0]		Fractional Portion of Decimation Rate. Decimation rate is the ratio of MCLK to ODR. In master mode, the user can program this register to set the ODR output frequency based on the MCLK frequency.	0x72	R/W

Address: 0x1A, Reset: 0xB7, Name: ODR_VAL_FLT_MID0

Table 63. Bit Descriptions for ODR_VAL_FLT_MID0

Bits	Bit Name	Settings	Description	Reset	Access
[7:0]	ODR_VAL_FLT[15:8]		Fractional Portion of Decimation Rate. Decimation rate is the ratio of MCLK to ODR. In master mode, the user can program this register to set the ODR output frequency based on the MCLK frequency.	0xB7	R/W

Address: 0x1B, Reset: 0xCE, Name: ODR_VAL_FLT_MID1

Table 64. Bit Descriptions for ODR_VAL_FLT_MID1

Bits	Bit Name	Settings	Description	Reset	Access
[7:0]	ODR_VAL_FLT[23:16]		Fractional Portion of Decimation Rate. Decimation rate is the ratio of MCLK to ODR. In master mode, the user can program this register to set the ODR output frequency based on the MCLK frequency.	0xCE	R/W

Address: 0x1C, Reset: 0x2B, Name: ODR_VAL_FLT_MSB

Table 65. Bit Descriptions for ODR_VAL_FLT_MSB

Bits	Bit Name	Settings	Description	Reset	Access
[7:0]	ODR_VAL_FLT[31:24]		Fractional Portion of Decimation Rate. Decimation rate is the ratio of MCLK to ODR. In master mode, the user can program this register to set the ODR output frequency based on the MCLK frequency.	0x2B	R/W

Address: 0x1D, Reset: 0x00, Name: CHANNEL_ODR_SELECT

Table 66. Bit Descriptions for CHANNEL_ODR_SELECT

Bits	Bit Name	Settings	Description	Reset	Access
[7:6]	ODR_RATE_SEL_CH3		Select Output Data Rate to ODR Frequency Ratio for Channel 3.	0x0	R/W
		0	Output data rate = ODR.		
		1	Output data rate = ODR/2.		
		10	Output data rate = ODR/4.		
		11	Output data rate = ODR/8.		
[5:4]	ODR_RATE_SEL_CH2		Select Output Data Rate to ODR Frequency Ratio for Channel 2.	0x0	R/W
		0	Output data rate = ODR.		
		1	Output data rate = ODR/2.		
		10	Output data rate = ODR/4.		
		11	Output data rate = ODR/8.		
[3:2]	ODR_RATE_SEL_CH1		Select Output Data Rate to ODR Frequency Ratio for Channel 1.	0x0	R/W
		0	Output data rate = ODR.		
		1	Output data rate = ODR/2.		
		10	Output data rate = ODR/4.		
		11	Output data rate = ODR/8.		
[1:0]	ODR_RATE_SEL_CH0		Select Output Data Rate to ODR Frequency Ratio for Channel 0.	0x0	R/W
		0	Output data rate = ODR.		
		1	Output data rate = ODR/2.		
		10	Output data rate = ODR/4.		
		11	Output data rate = ODR/8.		

Address: 0x1E, Reset: 0x00, Name: CHAN_DIG_FILTER_SEL

Table 67. Bit Descriptions for CHAN_DIG_FILTER_SEL

Bits	Bit Name	Settings	Description	Reset	Access
[7:6]	DIGFILTER_SEL_CH3		Channel 3 Digital Filter Type Selection.	0x0	R/W
		0	Wideband filter.		
		01	Sinc6 filter.		
		10	Sinc3 filter.		
		11	Sinc3 filter with simultaneous 50 Hz and 60 Hz rejection.		
[5:4]	DIGFILTER_SEL_CH2		Channel 2 Digital Filter Type Selection.	0x0	R/W
		0	Wideband filter.		
		01	Sinc6 filter.		

Bits	Bit Name	Settings	Description	Reset	Access
		10	Sinc3 filter.		
		11	Sinc3 filter with simultaneous 50 Hz and 60 Hz rejection.		
[3:2]	DIGFILTER_SEL_CH1		Channel 1 Digital Filter Type Selection.	0x0	R/W
		0	Wideband filter.		
		01	Sinc6 filter.		
		10	Sinc3 filter.		
		11	Sinc3 filter with simultaneous 50 Hz and 60 Hz rejection.		
[1:0]	DIGFILTER_SEL_CH0		Channel 0 Digital Filter Type Selection.	0x0	R/W
		0	Wideband filter.		
		01	Sinc6 filter.		
		10	Sinc3 filter.		
		11	Sinc3 filter with simultaneous 50 Hz and 60 Hz rejection.		

Address: 0x1F, Reset: 0x00, Name: FIR_BW_SEL

Table 68. Bit Descriptions for FIR_BW_SEL

Bits	Bit Name	Settings	Description	Reset	Access
[7:4]	Reserved		Reserved.	0x0	R
3	WB_FILTER_SEL_CH3		Channel 3 Wideband Filter Bandwidth Selection.	0x0	R/W
		0	Wideband filter has a bandwidth of 0.433 Hz × ODR.		
		1	Wideband filter has a bandwidth of 0.10825 Hz × ODR.		
2	WB_FILTER_SEL_CH2		Channel 2 Wideband Filter Bandwidth Selection.	0x0	R/W
		0	Wideband filter has a bandwidth of 0.433 Hz × ODR.		
		1	Wideband filter has a bandwidth of 0.10825 Hz × ODR.		
1	WB_FILTER_SEL_CH1		Channel 1 Wideband Filter Bandwidth Selection.	0x0	R/W
		0	Wideband filter has a bandwidth of 0.433 Hz × ODR.		
		1	Wideband filter has a bandwidth of 0.10825 Hz × ODR.		
0	WB_FILTER_SEL_CH0		Channel 0 Wideband Filter Bandwidth Selection.	0x0	R/W
		0	Wideband filter has a bandwidth of 0.433 Hz × ODR.		
		1	Wideband filter has a bandwidth of 0.10825 Hz × ODR.		

Address: 0x20, Reset: 0x00, Name: GPIO_DIR_CTRL

Table 69. Bit Descriptions for GPIO_DIR_CTRL

Bits	Bit Name	Settings	Description	Reset	Access
[7:0]	GPIO_IO_CONTROL		GPIO I/O Direction Control. Each bit controls the direction of a GPIO pin. A value of 0 sets the GPIO pin as an input. A value of 1 sets the GPIO pin as an output. Bit 0 is associated with GPIO0.	0x0	R/W

Address: 0x21, Reset: 0x00, Name: GPIO_DATA

Table 70. Bit Descriptions for GPIO_DATA

Bits	Bit Name	Settings	Description	Reset	Access
[7:0]	GPIO_DATA		GPIO Data Value. If a GPIO pin is configured as an input, the corresponding bit is read only and its value reflects the input logic status of the pin. If a GPIO pin is configured as an output, write to the corresponding bit to control the output logic of the pin. Bit 0 is associated with GPIO0. 1 = logic high and 0 = logic low.	0x0	R/W

Address: 0x22, Reset: 0x00, Name: ERROR_PIN_SRC_CONTROL

Table 71. Bit Descriptions for ERROR_PIN_SRC_CONTROL

Bits	Bit Name	Settings	Description	Reset	Access
[7:6]	Reserved		Reserved.	0x0	R
5	ERR_PIN_EN_OR_AIN		Enables Error Reporting on GPIO7 for Input Overrange Errors.	0x0	R/W
		0	Disables pin toggle for overvoltage error.		
		1	Enables pin toggle for overvoltage error.		

Bits	Bit Name	Settings	Description	Reset	Access
4	ERR_PIN_EN_INTERNAL		Enables Error Reporting on GPIO7 for Any Internal Errors. Internal error can be digital overflow or underflow error, memory map CRC error, ASRC error, fuse CRC error, or DCLK counter error. Make sure to enable the corresponding error in the diagnostic control register to enable this reporting.	0x0	R/W
		0	Disables pin toggle for internal errors.		
		1	Enables pin toggle for internal errors.		
3	ERR_PIN_EN_SPI		Enables error reporting on GPIO7 if there are any SPI errors such as read, write, CRC check, and clock counter errors. Make sure to enable SPI CRC error for reporting those errors on the pin.	0x0	R/W
		0	Disables pin toggle for SPI related errors.		
		1	Enables pin toggle for SPI related errors.		
[2:0]	Reserved		Reserved.	0x0	R

Address: 0x23, Reset: 0x00, Name: ERROR_PIN_CONTROL

Table 72. Bit Descriptions for ERROR_PIN_CONTROL

Bits	Bit Name	Settings	Description	Reset	Access
[7:3]	Reserved		Reserved.	0x0	R
2	ERR_PIN_IN_STATUS		This bit is the readback of the latched status of the error input, GPIO6, when it is enabled using the ERR_PIN_IN_EN bit.	0x0	R
1	ERR_PIN_IN_EN		Enables GPIO6 as an error input. This bit allows error to be daisy-chained from a digital host and is OR'ed with internal errors.	0x0	R/W
0	ERR_PIN_OUT_EN		Enables GPIO7 as an error output pin. The source of this error is defined by the ERROR_PIN_SRC_CONTROL register.	0x0	R/W

Address: 0x24, Reset: 0x00, Name: VCMBUF_CTRL

Table 73. Bit Descriptions for VCMBUF_CTRL

Bits	Bit Name	Settings	Description	Reset	Access
7	Reserved		Reserved.	0x0	R
6	PWRDN_VCMBUF		VCM Buffer Power Control.	0x0	R/W
		0	VCM buffer powered on.		
		1	VCM buffer powered down.		
[5:1]	VCMBUF_REF_DIV_SEL		V_{CM} Output Voltage Level Selection when VCMBUF_REF_SEL = 0.	0x0	R/W
		0	$V_{CM} = V_{REF} \times 10/20$.		
		1	Reserved.		
		10	$V_{CM} = V_{REF} \times 19/20$.		
		11	$V_{CM} = V_{REF} \times 18/20$.		
		100	$V_{CM} = V_{REF} \times 17/20$.		
		101	$V_{CM} = V_{REF} \times 16/20$.		
		110	$V_{CM} = V_{REF} \times 15/20$.		
		111	$V_{CM} = V_{REF} \times 14/20$.		
		1000	$V_{CM} = V_{REF} \times 13/20$.		
		1001	$V_{CM} = V_{REF} \times 12/20$.		
		1010	$V_{CM} = V_{REF} \times 11/20$.		
		1011	$V_{CM} = V_{REF} \times 9/20$.		
		1100	$V_{CM} = V_{REF} \times 8/20$.		
		1101	$V_{CM} = V_{REF} \times 7/20$.		
		1110	$V_{CM} = V_{REF} \times 6/20$.		
		1111	$V_{CM} = V_{REF} \times 5/20$.		
		10000	$V_{CM} = V_{REF} \times 4/20$.		
		10001	$V_{CM} = V_{REF} \times 3/20$.		
		10010	$V_{CM} = V_{REF} \times 2/20$.		
		10011	$V_{CM} = V_{REF} \times 1/20$.		
		11101	$V_{CM} = V_{REF} \times 10/20$.		
		11110	$V_{CM} = V_{REF} \times 10/20$.		
		11111	$V_{CM} = V_{REF} \times 10/20$.		

Bits	Bit Name	Settings	Description	Reset	Access
0	VCMBUF_REF_SEL		VCM Output Source Selection.	0x0	R/W
		0	VCM as a ratio of V_{REF}. The VCM output level is V_{REF} divided by the ratio set with VCMBUF_REF_DIV_SEL.		
		1	V_{CM} is fixed to AVDD5/2.		

Address: 0x25, Reset: 0x00, Name: Diagnostic Control

Table 74. Bit Descriptions for Diagnostic Control

Bits	Bit Name	Settings	Description	Reset	Access
[7:6]	Reserved		Reserved.	0x0	R
5	ERR_OR_AIN_EN		Enables Overrange Monitor on all Enabled Analog Input Channels.	0x0	R/W
		0	Input overvoltage monitor is disabled.		
		1	Input overvoltage monitor is enabled.		
4	Reserved		Reserved	0x0	R
3	MCLK_CNT_EN		Enables Master Clock Counter. Starts the MCLK counter, which monitors the external clock being used by the ADC.	0x0	R/W
		0	Disables MCLK counter.		
		1	Enables MCLK counter.		
2	ERR_SPI_CRC_EN		Enables CRC Check on SPI Read and Write Operations. The ERR_SPI_CRC bit in the SPI error register is set if the CRC check fails. In addition, an 8-bit CRC word is appended to all SPI read operations.	0x0	R/W
		0	SPI CRC disabled.		
		1	SPI CRC enabled.		
1	ERR_MM_CRC_EN		Enables Memory Map CRC Calculation. CRC calculation is performed on the memory map each time the registers are written to. Following this write, periodic CRC checks are performed on the on-chip registers. If the register contents have changed, the ERR_MM_CRC bit is set.	0x0	R/W
		0	Disables memory map CRC check.		
		1	Enables memory map CRC check.		
0	FUSE_CRC_CHECK		Initiates a CRC Calculation on the Fuse Contents. If the fuse contents have changed, the ERR_FUSE_CRC bit is set. This bit is cleared on completion of the check.	0x0	R/W
		0	CRC calculation disabled.		
		1	CRC calculation enabled.		

Address: 0x26, Reset: 0x00, Name: MPC_CONFIG

Table 75. Bit Descriptions for MPC_CONFIG

Bits	Bit Name	Settings	Description	Reset	Access
[7:6]	MPC_CLKDEL_EN_CH3		Magnitude and Phase Matching Calibration Clock Delay Enable for Channel 3.	0x0	R/W
		00	Magnitude and phase clock delay: 0 clock delays.		
		01	Magnitude and phase clock delay: 1 clock delay.		
		10	Magnitude and phase clock delay: 2 clock delays.		
		11	Magnitude and phase clock delay: 0 clock delays.		
[5:4]	MPC_CLKDEL_EN_CH2		Magnitude and Phase Matching Calibration Clock Delay Enable for Channel 2.	0x0	R/W
		00	Magnitude and phase clock delay: 0 clock delays.		
		01	Magnitude and phase clock delay: 1 clock delay.		
		10	Magnitude and phase clock delay: 2 clock delays.		
		11	Magnitude and phase clock delay: 0 clock delays.		
[3:2]	MPC_CLKDEL_EN_CH1		Magnitude and Phase Matching Calibration Clock Delay Enable for Channel 1.	0x0	R/W
		00	Magnitude and phase clock delay: 0 clock delays.		
		01	Magnitude and phase clock delay: 1 clock delay.		
		10	Magnitude and phase clock delay: 2 clock delays.		
		11	Magnitude and phase clock delay: 0 clock delay.		
[1:0]	MPC_CLKDEL_EN_CH0		Magnitude and Phase Matching Calibration Clock Delay Enable for Channel 0.	0x0	R/W
		00	Magnitude and phase clock delay: 0 clock delays.		
		01	Magnitude and phase clock delay: 1 clock delay.		

Bits	Bit Name	Settings	Description	Reset	Access
		10	Magnitude and phase clock delay: 2 clock delays.		
		11	Magnitude and phase clock delay: 0 clock delay.		

Address: 0x27, Reset: 0x00, Name: CH0_GAIN_LSB

Table 76. Bit Descriptions for CH0_GAIN_LSB

Bits	Bit Name	Settings	Description	Reset	Access
[7:0]	GAIN_CH0[7:0]		Channel 0 Gain Calibration Value.	0x0	R/W

Address: 0x28, Reset: 0x00, Name: CH0_GAIN_MID

Table 77. Bit Descriptions for CH0_GAIN_MID

Bits	Bit Name	Settings	Description	Reset	Access
[7:0]	GAIN_CH0[15:8]		Channel 0 Gain Calibration Value.	0x0	R/W

Address: 0x29, Reset: 0x00, Name: CH0_GAIN_MSB

Table 78. Bit Descriptions for CH0_GAIN_MSB

Bits	Bit Name	Settings	Description	Reset	Access
[7:5]	Reserved		Reserved.	0x0	R
4	GAIN_CAL_SEL_CH0		Enables Gain Calibration on Channel 0.	0x0	R/W
[3:0]	GAIN_CH0[19:16]		Channel 0 Gain Calibration Value.	0x0	R/W

Address: 0x2A, Reset: 0x00, Name: CH0_OFFSET_LSB

Table 79. Bit Descriptions for CH0_OFFSET_LSB

Bits	Bit Name	Settings	Description	Reset	Access
[7:0]	OFFSET_CH0[7:0]		Channel 0 Offset Calibration Value.	0x0	R/W

Address: 0x2B, Reset: 0x00, Name: CH0_OFFSET_MID

Table 80. Bit Descriptions for CH0_OFFSET_MID

Bits	Bit Name	Settings	Description	Reset	Access
[7:0]	OFFSET_CH0[15:8]		Channel 0 Offset Calibration Value.	0x0	R/W

Address: 0x2C, Reset: 0x00, Name: CH0_OFFSET_MSB

Table 81. Bit Descriptions for CH0_OFFSET_MSB

Bits	Bit Name	Settings	Description	Reset	Access
7	OFFSET_CAL_EN_CH0		Enables Offset Calibration on Channel 0.	0x0	R/W
[6:0]	OFFSET_CH0[22:16]		Channel 0 Offset Calibration Value.	0x0	R/W

Address: 0x2D, Reset: 0x00, Name: CH1_GAIN_LSB

Table 82. Bit Descriptions for CH1_GAIN_LSB

Bits	Bit Name	Settings	Description	Reset	Access
[7:0]	GAIN_CH1[7:0]		Channel 1 Gain Calibration Value.	0x0	R/W

Address: 0x2E, Reset: 0x00, Name: CH1_GAIN_MID

Table 83. Bit Descriptions for CH1_GAIN_MID

Bits	Bit Name	Settings	Description	Reset	Access
[7:0]	GAIN_CH1[15:8]		Channel 1 Gain Calibration Value.	0x0	R/W

Address: 0x2F, Reset: 0x00, Name: CH1_GAIN_MSB

Table 84. Bit Descriptions for CH1_GAIN_MSB

Bits	Bit Name	Settings	Description	Reset	Access
[7:5]	Reserved		Reserved.	0x0	R
4	GAIN_CAL_SEL_CH1		Enables Gain Calibration on Channel 1.	0x0	R/W
[3:0]	GAIN_CH1[19:16]		Channel 1 Gain Calibration Value.	0x0	R/W

Address: 0x30, Reset: 0x00, Name: CH1_OFFSET_LSB

Table 85. Bit Descriptions for CH1_OFFSET_LSB

Bits	Bit Name	Settings	Description	Reset	Access
[7:0]	OFFSET_CH1[7:0]		Channel 1 Offset Calibration Value.	0x0	R/W

Address: 0x31, Reset: 0x00, Name: CH1_OFFSET_MID

Table 86. Bit Descriptions for CH1_OFFSET_MID

Bits	Bit Name	Settings	Description	Reset	Access
[7:0]	OFFSET_CH1[15:8]		Channel 1 Offset Calibration Value.	0x0	R/W

Address: 0x32, Reset: 0x00, Name: CH1_OFFSET_MSB

Table 87. Bit Descriptions for CH1_OFFSET_MSB

Bits	Bit Name	Settings	Description	Reset	Access
7	OFFSET_CAL_EN_CH1		Enables Offset Calibration on Channel 1.	0x0	R/W
[6:0]	OFFSET_CH1[22:16]		Channel 1 Offset Calibration Value.	0x0	R/W

Address: 0x33, Reset: 0x00, Name: CH2_GAIN_LSB

Table 88. Bit Descriptions for CH2_GAIN_LSB

Bits	Bit Name	Settings	Description	Reset	Access
[7:0]	GAIN_CH2[7:0]		Channel 2 Gain Calibration Value.	0x0	R/W

Address: 0x34, Reset: 0x00, Name: CH2_GAIN_MID

Table 89. Bit Descriptions for CH2_GAIN_MID

Bits	Bit Name	Settings	Description	Reset	Access
[7:0]	GAIN_CH2[15:8]		Channel 2 Gain Calibration Value.	0x0	R/W

Address: 0x35, Reset: 0x00, Name: CH2_GAIN_MSB

Table 90. Bit Descriptions for CH2_GAIN_MSB

Bits	Bit Name	Settings	Description	Reset	Access
[7:5]	Reserved		Reserved.	0x0	R
4	GAIN_CAL_SEL_CH2		Enables Gain Calibration on Channel 2.	0x0	R/W
[3:0]	GAIN_CH2[19:16]		Channel 2 Gain Calibration Value.	0x0	R/W

Address: 0x36, Reset: 0x00, Name: CH2_OFFSET_LSB

Table 91. Bit Descriptions for CH2_OFFSET_LSB

Bits	Bit Name	Settings	Description	Reset	Access
[7:0]	OFFSET_CH2[7:0]		Channel 2 Offset Calibration Value.	0x0	R/W

Address: 0x37, Reset: 0x00, Name: CH2_OFFSET_MID

Table 92. Bit Descriptions for CH2_OFFSET_MID

Bits	Bit Name	Settings	Description	Reset	Access
[7:0]	OFFSET_CH2[15:8]		Channel 2 Offset Calibration Value.	0x0	R/W

Address: 0x38, Reset: 0x00, Name: CH2_OFFSET_MSB

Table 93. Bit Descriptions for CH2_OFFSET_MSB

Bits	Bit Name	Settings	Description	Reset	Access
7	OFFSET_CAL_EN_CH2		Enables Offset Calibration on Channel 2.	0x0	R/W
[6:0]	OFFSET_CH2[22:16]		Channel 2 Offset Calibration Value.	0x0	R/W

Address: 0x39, Reset: 0x00, Name: CH3_GAIN_LSB

Table 94. Bit Descriptions for CH3_GAIN_LSB

Bits	Bit Name	Settings	Description	Reset	Access
[7:0]	GAIN_CH3[7:0]		Channel 3 Gain Calibration Value.	0x0	R/W

Address: 0x3A, Reset: 0x00, Name: CH3_GAIN_MID

Table 95. Bit Descriptions for CH3_GAIN_MID

Bits	Bit Name	Settings	Description	Reset	Access
[7:0]	GAIN_CH3[15:8]		Channel 3 Gain Calibration Value.	0x0	R/W

Address: 0x3B, Reset: 0x00, Name: CH3_GAIN_MSB

Table 96. Bit Descriptions for CH3_GAIN_MSB

Bits	Bit Name	Settings	Description	Reset	Access
[7:5]	Reserved		Reserved.	0x0	R
4	GAIN_CAL_SEL_CH3		Enables Gain Calibration on Channel 3.	0x0	R/W
[3:0]	GAIN_CH3[19:16]		Channel 3 Gain Calibration Value.	0x0	R/W

Address: 0x3C, Reset: 0x00, Name: CH3_OFFSET_LSB

Table 97. Bit Descriptions for CH3_OFFSET_LSB

Bits	Bit Name	Settings	Description	Reset	Access
[7:0]	OFFSET_CH3[7:0]		Channel 3 Offset Calibration Value.	0x0	R/W

Address: 0x3D, Reset: 0x00, Name: CH3_OFFSET_MID

Table 98. Bit Descriptions for CH3_OFFSET_MID

Bits	Bit Name	Settings	Description	Reset	Access
[7:0]	OFFSET_CH3[15:8]		Channel 3 Offset Calibration Value.	0x0	R/W

Address: 0x3E, Reset: 0x00, Name: CH3_OFFSET_MSB

Table 99. Bit Descriptions for CH3_OFFSET_MSB

Bits	Bit Name	Settings	Description	Reset	Access
7	OFFSET_CAL_EN_CH3		Enables Offset Calibration on Channel 3.	0x0	R/W
[6:0]	OFFSET_CH3[22:16]		Channel 3 Offset Calibration Value.	0x0	R/W

Address: 0x3F, Reset: 0x00, Name: MCLK_COUNTER

Table 100. Bit Descriptions for MCLK_COUNTER

Bits	Bit Name	Settings	Description	Reset	Access
[7:0]	MCLK_COUNT		8-Bit Counter that Increments Once Every 12,000 MCLK Cycles. The counter output is read back, which enables the user to determine the frequency of the external clock. The MCLK counter starts when MCLK_CNT_EN is set, and ends when it reaches 255 MCLK cycles.	0x0	R

Address: 0x40, Reset: 0x00, Name: DIG_FILTER_OFUF

Table 101. Bit Descriptions for DIG_FILTER_OFUF

Bits	Bit Name	Settings	Description	Reset	Access
[7:4]	Reserved		Reserved.	0x0	R
3	ERR_OFUF_CH3		Channel 3 Digital Filter Overflow or Underflow Error.	0x0	R
		0	No overflow or underflow error.		
		1	Overflow or underflow error.		
2	ERR_OFUF_CH2		Channel 2 Digital Filter Overflow or Underflow Error.	0x0	R
		0	No overflow or underflow error.		
		1	Overflow or underflow error.		
1	ERR_OFUF_CH1		Channel 1 Digital Filter Overflow or Underflow Error.	0x0	R
		0	No overflow or underflow error.		
		1	Overflow or underflow error.		
0	ERR_OFUF_CH0		Channel 0 Digital Filter Overflow or Underflow Error.	0x0	R
		0	No overflow or underflow error.		
		1	Overflow or underflow error.		

Address: 0x41, Reset: 0x00, Name: DIG_FILTER_SETTLED

Table 102. Bit Descriptions for DIG_FILTER_SETTLED

Bits	Bit Name	Settings	Description	Reset	Access
[7:4]	Reserved		Reserved.	0x0	R
3	CH3_SETTLED		Channel 3 Digital Filter Status.	0x0	R
		0	Digital filter not settled.		
		1	Digital filter is settled.		
2	CH2_SETTLED		Channel 2 Digital Filter Status.	0x0	R
		0	Digital filter not settled.		
		1	Digital filter is settled.		
1	CH1_SETTLED		Channel 1 Digital Filter Status.	0x0	R
		0	Digital filter not settled.		
		1	Digital filter is settled.		
0	CH0_SETTLED		Channel 0 Digital Filter Status.	0x0	R
		0	Digital filter not settled.		
		1	Digital filter is settled.		

Address: 0x42, Reset: 0x00, Name: INTERNAL_ERROR

Table 103. Bit Descriptions for INTERNAL_ERROR

Bits	Bit Name	Settings	Description	Reset	Access
[7:4]	Reserved		Reserved.	0x0	R
3	ERR_DCLK		DCLK Error Flag Indicates that the DCLK Programmed or Provided is Low to Clock Out the Complete Frame.	0x0	R
		0	No DCLK error.		
		1	DCLK error.		
2	ERR_FUSE_CRC		Fuse Error Flag Indicates a CRC Error in Fuse Contents. When enabled, a CRC calculation is performed on the fuse contents. If the contents have changed, this bit is set.	0x0	R
		0	No fuse CRC error.		
		1	Fuse CRC error.		
1	ERR_ASRC		ASRC Error Flag Indicates if ODR is Out of Range of the Filter Selected.	0x0	R
		0	No ASRC error.		
		1	ASRC error.		
0	ERR_MM_CRC		Memory Map Error Flag Indicates CRC Error in On-Chip Register Contents. When enabled, a CRC calculation is performed on the memory map each time the registers are written to. Following this calculation, periodic CRC checks are performed on the on-chip registers. If the register contents have changed, an error is flagged.	0x0	R
		0	No memory map error.		
		1	Memory map error.		

Address: 0x47, Reset: 0x00, Name: SPI Error

Table 104. Bit Descriptions for SPI Error

Bits	Bit Name	Settings	Description	Reset	Access
[7:4]	Reserved		Reserved.	0x0	R
3	ERR_SPI_CRC		SPI CRC Error Flag Indicates CRC Error During SPI Communications. This error reporting is enabled using the ERR_SPI_CRC_EN bit in the diagnostic control register.	0x0	R
		0	No CRC error.		
		1	CRC error detected.		
2	ERR_SPI_SCLK_CNT		SCLK counter error flag indicates that the number of SCLK cycles during SPI communication is not a multiple of eight.	0x0	R
		0	No error.		
		1	SCLK counter error detected.		
1	ERR_SPI_WRITE		SPI Write Error Flag Indicates Error During SPI Write Operation.	0x0	R
		0	No error.		
		1	SPI write error.		

Bits	Bit Name	Settings	Description	Reset	Access
0	ERR_SPI_READ		SPI Read Error Flag Indicates Error During SPI Read Operation.	0x0	R
		0	No error.		
		1	Read error detected.		

Address: 0x48, Reset: 0x00, Name: AIN_OR_ERROR

Table 105. Bit Descriptions for AIN_OR_ERROR

Bits	Bit Name	Settings	Description	Reset	Access
[7:4]	Reserved		Reserved.	0x0	R
3	ERR_OR_AIN3		Input Overvoltage Flag on Channel 3. When enabled, this bit detects the input voltage exceeding the absolute value of V_{REF}.	0x0	R
		0	No overvoltage input detected.		
		1	Overvoltage input detected.		
2	ERR_OR_AIN2		Input Overvoltage Flag on Channel 2. When enabled, this bit detects the input voltage exceeding the absolute value of V_{REF}.	0x0	R
		0	No overvoltage input detected.		
		1	Overvoltage input detected.		
1	ERR_OR_AIN1		Input Overvoltage Flag on Channel 1. When enabled, this bit detects the input voltage exceeding the absolute value of V_{REF}.	0x0	R
		0	No overvoltage input detected.		
		1	Overvoltage input detected.		
0	ERR_OR_AIN0		Input Overvoltage Flag on Channel 0. When enabled, this bit detects the input voltage exceeding the absolute value of V_{REF}.	0x0	R
		0	No overvoltage input detected.		
		1	Overvoltage input detected.		

OUTLINE DIMENSIONS

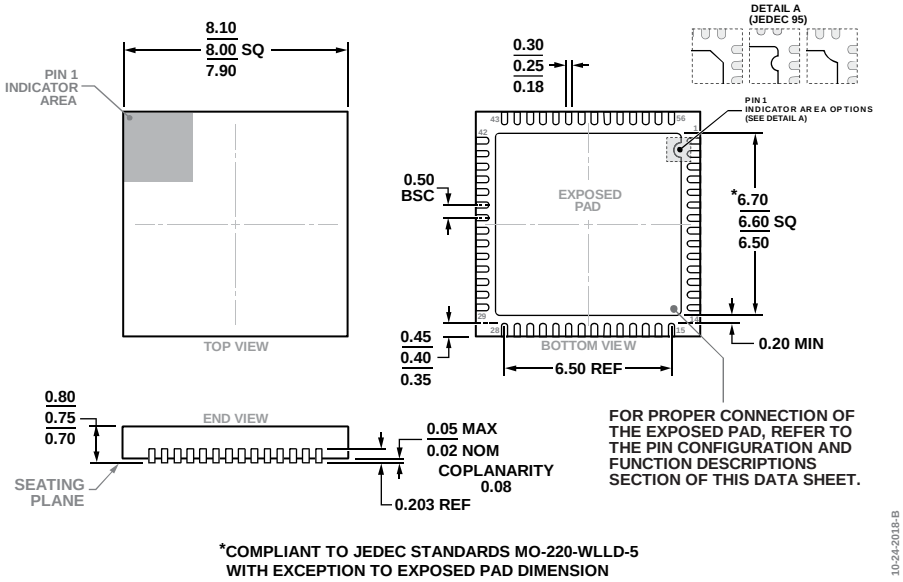

Figure 127. 56-Lead Lead Frame Chip Scale Package [LFCSP]
8 mm × 8 mm Body and 0.75 mm Package Height
(CP-56-9)
Dimensions shown in millimeters

ORDERING GUIDE

Model[1]	Temperature Range	Package Description	Package Option
AD7134BCPZ	0°C to 85°C	56-Lead Lead Frame Chip Scale Package [LFCSP]	CP-56-9
AD7134BCPZ-RL7	0°C to 85°C	56-Lead Lead Frame Chip Scale Package [LFCSP]	CP-56-9
EVAL-AD7134FMCZ		Evaluation Board	
EVAL-SDP-CH1Z		Controller Board	

[1] Z = RoHS Compliant Part.

©2020 Analog Devices, Inc. All rights reserved. Trademarks and registered trademarks are the property of their respective owners.
D22652-4/20(0)