Buffered Octal, 18-Bit, 200ksps/Ch Differential ±10.24V ADC with 30V_{P-P} Common Mode Range

FEATURES

- **Simultaneous Sampling of 8 Buffered Channels**
- **200ksps per Channel Throughput**
- **500pA/12nA Max Input Leakage at 85°C/125°C**
- **±3.5LSB INL (Maximum, ±10.24V Range)**
- **Guaranteed 18-Bit, No Missing Codes**
- **Differential, Wide Common Mode Range Inputs**
- **Per-Channel SoftSpan Input Ranges:**
  - **±10.24V, 0V to 10.24V, ±5.12V, 0V to 5.12V**
  - **±12.5V, 0V to 12.5V, ±6.25V, 0V to 6.25V**
- **96.4dB Single-Conversion SNR (Typical)**
- **–111dB THD (Typical) at f_{IN} = 2kHz**
- **128dB CMRR (Typical) at f_{IN} = 200Hz**
- **Rail-to-Rail Input Overdrive Tolerance**
- Integrated Reference and Buffer (4.096V)
- SPI CMOS (1.8V to 5V) and LVDS Serial I/O
- Internal Conversion Clock, No Cycle Latency
- 219mW Power Dissipation (27mW/Ch Typical)
- 48-Lead (7mm x 7mm) LQFP Package

APPLICATIONS

- Programmable Logic Controllers
- Industrial Process Control
- Power Line Monitoring
- Test and Measurement

DESCRIPTION

The LTC®2358-18 is an 18-bit, low noise 8-channel simultaneous sampling successive approximation register (SAR) ADC with buffered differential, wide common mode range picoamp inputs. Operating from a 5V low voltage supply, flexible high voltage supplies, and using the internal reference and buffer, each channel of this SoftSpan™ ADC can be independently configured on a conversion-by-conversion basis to accept ±10.24V, 0V to 10.24V, ±5.12V, or 0V to 5.12V signals. Individual channels may also be disabled to increase throughput on the remaining channels.

The integrated picoamp-input analog buffers, wide input common mode range and 128dB CMRR of the LTC2358-18 allow the ADC to directly digitize a variety of signals using minimal board space and power. This input signal flexibility, combined with ±3.5LSB INL, no missing codes at 18 bits, and 96.4dB SNR, makes the LTC2358-18 an ideal choice for many high voltage applications requiring wide dynamic range.

The LTC2358-18 supports pin-selectable SPI CMOS (1.8V to 5V) and LVDS serial interfaces. Between one and eight lanes of data output may be employed in CMOS mode, allowing the user to optimize bus width and throughput.

LT, LTC, LTM, Linear Technology and the Linear logo are registered trademarks and SoftSpan is a trademark of Analog Devices Inc. All other trademarks are the property of their respective owners. Protected by U.S. Patents, including 7705765, 7961132, 8319673, 9197235.

TYPICAL APPLICATION

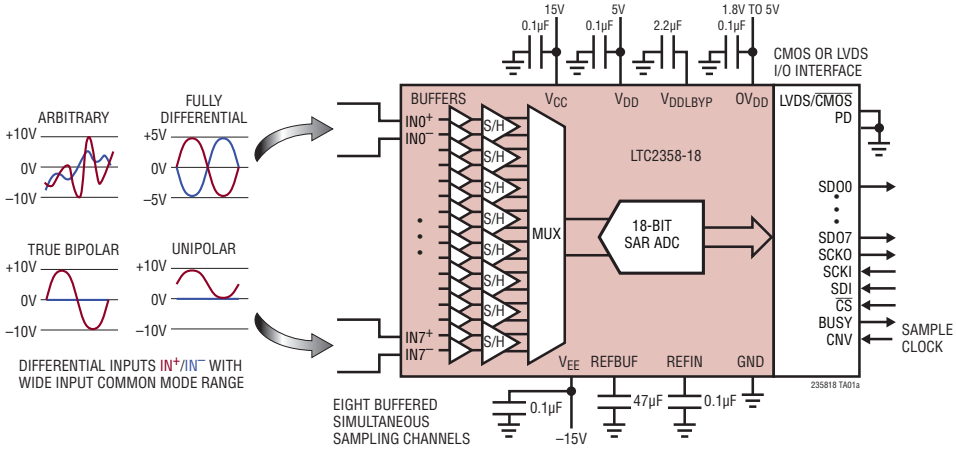

Integral Nonlinearity vs Output Code and Channel

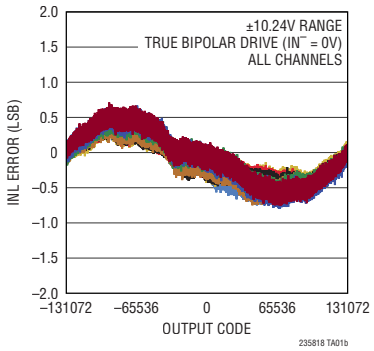

ABSOLUTE MAXIMUM RATINGS

(Notes 1, 2)

Supply Voltage (V_{CC}) .....–0.3V to (V_{EE} + 40V)
Supply Voltage (V_{EE})..... –17.4V to 0.3V
Supply Voltage Difference (V_{CC} – V_{EE}).....40V
Supply Voltage (V_{DD}) 6V
Supply Voltage (OV_{DD}).....6V
Internal Regulated Supply Bypass (V_{DDLBYP}) ... (Note 3)
Analog Input Voltage
  $IN0^+$ to $IN7^+$,
  $IN0^-$ to $IN7^-$ (Note 4) ..... (V_{EE} – 0.3V) to (V_{CC} + 0.3V)
  REFIN..... –0.3V to 2.8V
  REFBUF, CNV (Note 5) ..... –0.3V to (V_{DD} + 0.3V)
Digital Input Voltage (Note 5)..... –0.3V to (OV_{DD} + 0.3V)
Digital Output Voltage (Note 5) .. –0.3V to (OV_{DD} + 0.3V)
Power Dissipation 500mW
Operating Temperature Range
  LTC2358C..... 0°C to 70°C
  LTC2358I .....–40°C to 85°C
  LTC2358H..... –40°C to 125°C
Storage Temperature Range ..... –65°C to 150°C

PIN CONFIGURATION

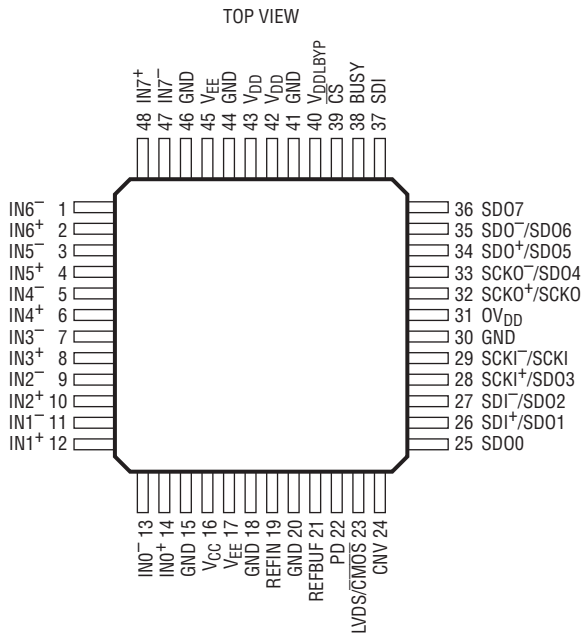

LX PACKAGE
48-LEAD (7mm × 7mm) PLASTIC LQFP
T_{JMAX} = 150°C, θ_{JA} = 53°C/W

ORDER INFORMATION

http://www.linear.com/product/LTC2358-18#orderinfo

TRAY	PART MARKING*	PACKAGE DESCRIPTION	TEMPERATURE RANGE
LTC2358CLX-18#PBF	LTC2358LX-18	48-Lead (7mm × 7mm) Plastic LQFP	0°C to 70°C
LTC2358ILX-18#PBF	LTC2358LX-18	48-Lead (7mm × 7mm) Plastic LQFP	–40°C to 85°C
LTC2358HLX-18#PBF	LTC2358LX-18	48-Lead (7mm × 7mm) Plastic LQFP	–40°C to 125°C

Consult LTC Marketing for parts specified with wider operating temperature ranges. *The temperature grade is identified by a label on the shipping container.

For more information on lead free part marking, go to: http://www.linear.com/leadfree/

ELECTRICAL CHARACTERISTICS

The ● denotes the specifications which apply over the full operating temperature range, otherwise specifications are at T_A = 25°C. (Note 6)

SYMBOL	PARAMETER	CONDITIONS		MIN	TYP	MAX	UNITS
$V_{IN}+$	Absolute Input Range (IN0⁺ to IN7⁺)	(Note 7)	●	V_{EE} + 4		V_{CC} – 4	V
$V_{IN}–$	Absolute Input Range (IN0⁻ to IN7⁻)	(Note 7)	●	V_{EE} + 4		V_{CC} – 4	V
$V_{IN}+ – V_{IN}–$	Input Differential Voltage Range	SoftSpan 7: ±2.5 • V_{REFBUF} Range (Note 7)	●	–2.5 • V_{REFBUF}		2.5 • V_{REFBUF}	V
		SoftSpan 6: ±2.5 • V_{REFBUF}/1.024 Range (Note 7)	●	–2.5 • V_{REFBUF}/1.024		2.5 • V_{REFBUF}/1.024	V
		SoftSpan 5: 0V to 2.5 • V_{REFBUF} Range (Note 7)	●	0		2.5 • V_{REFBUF}	V
		SoftSpan 4: 0V to 2.5 • V_{REFBUF}/1.024 Range (Note 7)	●	0		2.5 • V_{REFBUF}/1.024	V
		SoftSpan 3: ±1.25 • V_{REFBUF} Range (Note 7)	●	–1.25 • V_{REFBUF}		1.25 • V_{REFBUF}	V
		SoftSpan 2: ±1.25 • V_{REFBUF}/1.024 Range (Note 7)	●	–1.25 • V_{REFBUF}/1.024		1.25 • V_{REFBUF}/1.024	V
		SoftSpan 1: 0V to 1.25 • V_{REFBUF} Range (Note 7)	●	0		1.25 • V_{REFBUF}	V
V_{CM}	Input Common Mode Voltage Range	(Note 7)	●	V_{EE} + 4		V_{CC} – 4	V
$V_{IN}+ – V_{IN}–$	Input Differential Overdrive Tolerance	(Note 8)	●	–(V_{CC} – V_{EE})		(V_{CC} – V_{EE})	V
$I_{OVERDRIVE}$	Input Overdrive Current Tolerance	$V_{IN}+ > V_{CC}$, $V_{IN}– > V_{CC}$ (Note 8)	●			10	mA
		$V_{IN}+ < V_{EE}$, $V_{IN}– < V_{EE}$ (Note 8)	●	0			mA
I_{IN}	Analog Input Leakage Current				5		pA
		C-Grade and I-Grade	●			500	pA
		H-Grade	●			12	nA
R_{IN}	Analog Input Resistance	For Each Pin			>1000		GΩ
C_{IN}	Analog Input Capacitance				3		pF
CMRR	Input Common Mode Rejection Ratio	$V_{IN}+ = V_{IN}– = 18V_{P-P}$ 200Hz Sine	●	100	128		dB
V_{IHCNV}	CNV High Level Input Voltage		●	1.3			V
V_{ILCNV}	CNV Low Level Input Voltage		●			0.5	V
I_{INCNV}	CNV Input Current	V_{IN} = 0V to V_{DD}	●	–10		10	µA

CONVERTER CHARACTERISTICS

The ● denotes the specifications which apply over the full operating temperature range, otherwise specifications are at T_A = 25°C. (Note 9)

SYMBOL	PARAMETER	CONDITIONS		MIN	TYP	MAX	UNITS
	Resolution		●	18			Bits
	No Missing Codes		●	18			Bits
	Transition Noise	SoftSpans 7 and 6: ±10.24V and ±10V Ranges			1.4		LSB_{RMS}
		SoftSpans 5 and 4: 0V to 10.24V and 0V to 10V Ranges			2.8		LSB_{RMS}
		SoftSpans 3 and 2: ±5.12V and ±5V Ranges			2.1		LSB_{RMS}
		SoftSpan 1: 0V to 5.12V Range			4.2		LSB_{RMS}
INL	Integral Linearity Error	SoftSpans 7 and 6: ±10.24V and ±10V Ranges (Note 10)	●	–3.5	±1	3.5	LSB
		SoftSpans 5 and 4: 0V to 10.24V and 0V to 10V Ranges (Note 10)	●	–4	±1.5	4	LSB
		SoftSpans 3 and 2: ±5.12V and ±5V Ranges (Note 10)	●	–4	±0.75	4	LSB
		SoftSpan 1: 0V to 5.12V Range (Note 10)	●	–6	±0.75	6	LSB
DNL	Differential Linearity Error	(Note 11)	●	–0.9	±0.2	0.9	LSB
ZSE	Zero-Scale Error	(Note 12)	●	–700	±160	700	µV
	Zero-Scale Error Drift				±4		µV/°C
FSE	Full-Scale Error	V_{REFBUF} = 4.096V (REFBUF Overdriven) (Note 12)	●	–0.1	±0.025	0.1	%FS
	Full-Scale Error Drift	V_{REFBUF} = 4.096V (REFBUF Overdriven) (Note 12)			±2.5		ppm/°C

DYNAMIC ACCURACY

The ● denotes the specifications which apply over the full operating temperature range, otherwise specifications are at T_A = 25°C. A_{IN} = –1dBFS. (Notes 9, 13)

SYMBOL	PARAMETER	CONDITIONS		MIN	TYP	MAX	UNITS
SINAD	Signal-to-(Noise + Distortion) Ratio	SoftSpans 7 and 6: ±10.24V and ±10V Ranges, f_{IN} = 2kHz SoftSpans 5 and 4: 0V to 10.24V and 0V to 10V Ranges, f_{IN} = 2kHz SoftSpans 3 and 2: ±5.12V and ±5V Ranges, f_{IN} = 2kHz SoftSpan 1: 0V to 5.12V Range, f_{IN} = 2kHz	● ● ● ●	92.7 87.3 89.3 83.6	96.2 90.3 92.5 86.6		dB dB dB dB
SNR	Signal-to-Noise Ratio	SoftSpans 7 and 6: ±10.24V and ±10V Ranges, f_{IN} = 2kHz SoftSpans 5 and 4: 0V to 10.24V and 0V to 10V Ranges, f_{IN} = 2kHz SoftSpans 3 and 2: ±5.12V and ±5V Ranges, f_{IN} = 2kHz SoftSpan 1: 0V to 5.12V Range, f_{IN} = 2kHz	● ● ● ●	93.4 87.4 89.5 83.7	96.4 90.4 92.5 86.6		dB dB dB dB
THD	Total Harmonic Distortion	SoftSpans 7 and 6: ±10.24V and ±10V Ranges, f_{IN} = 2kHz SoftSpans 5 and 4: 0V to 10.24V and 0V to 10V Ranges, f_{IN} = 2kHz SoftSpans 3 and 2: ±5.12V and ±5V Ranges, f_{IN} = 2kHz SoftSpan 1: 0V to 5.12V Range, f_{IN} = 2kHz	● ● ● ●		–111 –107 –113 –113	–101 –99 –102 –100	dB dB dB dB
SFDR	Spurious Free Dynamic Range	SoftSpans 7 and 6: ±10.24V and ±10V Ranges, f_{IN} = 2kHz SoftSpans 5 and 4: 0V to 10.24V and 0V to 10V Ranges, f_{IN} = 2kHz SoftSpans 3 and 2: ±5.12V and ±5V Ranges, f_{IN} = 2kHz SoftSpan 1: 0V to 5.12V Range, f_{IN} = 2kHz	● ● ● ●	101 99 103 103	113 107 113 113		dB dB dB dB
	Channel-to-Channel Crosstalk	One Channel Converting 18V_{P-P} 200Hz Sine in ±10.24V Range, Crosstalk to All Other Channels			–109		dB
	–3dB Input Bandwidth				6		MHz
	Aperture Delay				1		ns
	Aperture Delay Matching				150		ps
	Aperture Jitter				3		ps_{RMS}
	Transient Response	Full-Scale Step, 0.005% Settling			420		ns

INTERNAL REFERENCE CHARACTERISTICS

The ● denotes the specifications which apply over the full operating temperature range, otherwise specifications are at T_A = 25°C. (Note 9)

SYMBOL	PARAMETER	CONDITIONS		MIN	TYP	MAX	UNITS
V_{REFIN}	Internal Reference Output Voltage			2.043	2.048	2.053	V
	Internal Reference Temperature Coefficient	(Note 14)	●		5	20	ppm/°C
	Internal Reference Line Regulation	V_{DD} = 4.75V to 5.25V			0.1		mV/V
	Internal Reference Output Impedance				20		kΩ
V_{REFIN}	REFIN Voltage Range	REFIN Overdriven (Note 7)		1.25		2.2	V

REFERENCE BUFFER CHARACTERISTICS

The ● denotes the specifications which apply over the full operating temperature range, otherwise specifications are at T_A = 25°C. (Note 9)

SYMBOL	PARAMETER	CONDITIONS		MIN	TYP	MAX	UNITS
V_{REFBUF}	Reference Buffer Output Voltage	REFIN Overdriven, V_{REFIN} = 2.048V	●	4.091	4.096	4.101	V
	REFBUF Voltage Range	REFBUF Overdriven (Notes 7, 15)	●	2.5		5	V
	REFBUF Input Impedance	V_{REFIN} = 0V, Buffer Disabled			13		kΩ
I_{REFBUF}	REFBUF Load Current	V_{REFBUF} = 5V, 8 Channels Enabled (Notes 15, 16) V_{REFBUF} = 5V, Acquisition or Nap Mode (Note 15)	●		1.5 0.39	1.9	mA mA

DIGITAL INPUTS AND DIGITAL OUTPUTS

The ● denotes the specifications which apply over the full operating temperature range, otherwise specifications are at T_A = 25°C. (Note 9)

SYMBOL	PARAMETER	CONDITIONS		MIN	TYP	MAX	UNITS
		CMOS Digital Inputs and Outputs					
V_{IH}	High Level Input Voltage		●	0.8 • OV_{DD}			V
V_{IL}	Low Level Input Voltage		●			0.2 • OV_{DD}	V
I_{IN}	Digital Input Current	V_{IN} = 0V to OV_{DD}	●	–10		10	µA
C_{IN}	Digital Input Capacitance				5		pF
V_{OH}	High Level Output Voltage	I_{OUT} = –500µA	●	OV_{DD} – 0.2			V
V_{OL}	Low Level Output Voltage	I_{OUT} = 500µA	●			0.2	V
I_{OZ}	Hi-Z Output Leakage Current	V_{OUT} = 0V to OV_{DD}	●	–10		10	µA
I_{SOURCE}	Output Source Current	V_{OUT} = 0V			–50		mA
I_{SINK}	Output Sink Current	V_{OUT} = OV_{DD}			50		mA
		LVDS Digital Inputs and Outputs					
V_{ID}	Differential Input Voltage		●	200	350	600	mV
R_{ID}	On-Chip Input Termination Resistance	$\overline{CS}$ = 0V, V_{ICM} = 1.2V $\overline{CS}$ = OV_{DD}	●	90	106 10	125	Ω MΩ
V_{ICM}	Common-Mode Input Voltage		●	0.3	1.2	2.2	V
I_{ICM}	Common-Mode Input Current	V_{IN}+ = V_{IN}– = 0V to OV_{DD}	●	–10		10	µA
V_{OD}	Differential Output Voltage	R_L = 100Ω Differential Termination	●	275	350	425	mV
V_{OCM}	Common-Mode Output Voltage	R_L = 100Ω Differential Termination	●	1.1	1.2	1.3	V
I_{OZ}	Hi-Z Output Leakage Current	V_{OUT} = 0V to OV_{DD}	●	–10		10	µA

POWER REQUIREMENTS

The ● denotes the specifications which apply over the full operating temperature range, otherwise specifications are at T_A = 25°C. (Note 9)

SYMBOL	PARAMETER	CONDITIONS		MIN	TYP	MAX	UNITS
V_{CC}	Supply Voltage		●	7.5		38	V
V_{EE}	Supply Voltage		●	–16.5		0	V
V_{CC} – V_{EE}	Supply Voltage Difference		●	10		38	V
V_{DD}	Supply Voltage		●	4.75	5.00	5.25	V
I_{VCC}	Supply Current	200ksps Sample Rate, 8 Channels Enabled (Note 17) Acquisition Mode (Note 17) Nap Mode Power Down Mode	● ● ● ●		4.6 8.5 2.9 6	5.3 9.8 3.3 15	mA mA mA µA
I_{VEE}	Supply Current	200ksps Sample Rate, 8 Channels Enabled (Note 17) Acquisition Mode (Note 17) Nap Mode Power Down Mode	● ● ● ●	–5.5 –9.8 –3.5 –15	–4.5 –8 –2.8 –4		mA mA mA µA
		CMOS I/O Mode					
OV_{DD}	Supply Voltage		●	1.71		5.25	V
I_{VDD}	Supply Current	200ksps Sample Rate, 8 Channels Enabled 200ksps Sample Rate, 8 Channels Enabled, V_{REFBUF} = 5V (Notes 15) Acquisition Mode Nap Mode Power Down Mode (C-Grade and I-Grade) Power Down Mode (H-Grade)	● ● ● ● ● ●		15.6 13.8 2.1 1.7 106 106	18 16 2.7 2.4 275 500	mA mA mA mA µA µA

POWER REQUIREMENTS

The ● denotes the specifications which apply over the full operating temperature range, otherwise specifications are at T_A = 25°C. (Note 9)

SYMBOL	PARAMETER	CONDITIONS		MIN	TYP	MAX	UNITS
I_{OVDD}	Supply Current	200ksps Sample Rate, 8 Channels Enabled (C_L = 25pF)	●		1.6	2.6	mA
		Acquisition or Nap Mode	●		1	20	µA
		Power Down Mode	●		1	20	µA
P_D	Power Dissipation	200ksps Sample Rate, 8 Channels Enabled	●		219	259	mW
		Acquisition Mode	●		258	308	mW
		Nap Mode	●		94	114	mW
		Power Down Mode (C-Grade and I-Grade)	●		0.68	1.9	mW
		Power Down Mode (H-Grade)	●		0.68	3	mW
		LVDS I/O Mode					
OV_{DD}	Supply Voltage		●	2.375		5.25	V
I_{VDD}	Supply Current	200ksps Sample Rate, 8 Channels Enabled	●		18.4	20.7	mA
		200ksps Sample Rate, 8 Channels Enabled, V_{REFBUF} = 5V (Note 15)	●		16.8	19.2	mA
		Acquisition Mode	●		3.7	4.5	mA
		Nap Mode	●		3.4	4.1	mA
		Power Down Mode (C-Grade and I-Grade)	●		106	275	µA
		Power Down Mode (H-Grade)	●		106	500	µA
I_{OVDD}	Supply Current	200ksps Sample Rate, 8 Channels Enabled (R_L = 100Ω)	●		7	8.5	mA
		Acquisition or Nap Mode (R_L = 100Ω)	●		7	8.0	mA
		Power Down Mode	●		1	20	µA
P_D	Power Dissipation	200ksps Sample Rate, 8 Channels Enabled	●		245	287	mW
		Acquisition Mode	●		284	337	mW
		Nap Mode	●		120	143	mW
		Power Down Mode (C-Grade and I-Grade)	●		0.68	1.9	mW
		Power Down Mode (H-Grade)	●		0.68	3	mW

ADC TIMING CHARACTERISTICS

The ● denotes the specifications which apply over the full operating temperature range, otherwise specifications are at T_A = 25°C. (Note 9)

SYMBOL	PARAMETER	CONDITIONS		MIN	TYP	MAX	UNITS
f_{SMPL}	Maximum Sampling Frequency	8 Channels Enabled	●			200	ksps
		7 Channels Enabled	●			225	ksps
		6 Channels Enabled	●			250	ksps
		5 Channels Enabled	●			300	ksps
		4 Channels Enabled	●			350	ksps
		3 Channels Enabled	●			425	ksps
		2 Channels Enabled	●			550	ksps
		1 Channel Enabled	●			800	ksps
t_{CYC}	Time Between Conversions	8 Channels Enabled, f_{SMPL} = 200ksps	●	5000			ns
		7 Channels Enabled, f_{SMPL} = 225ksps	●	4444			ns
		6 Channels Enabled, f_{SMPL} = 250ksps	●	4000			ns
		5 Channels Enabled, f_{SMPL} = 300ksps	●	3333			ns
		4 Channels Enabled, f_{SMPL} = 350ksps	●	2855			ns
		3 Channels Enabled, f_{SMPL} = 425ksps	●	2350			ns
		2 Channels Enabled, f_{SMPL} = 550ksps	●	1815			ns
		1 Channel Enabled, f_{SMPL} = 800ksps	●	1250			ns
t_{CONV}	Conversion Time	N Channels Enabled, 1 ≤ N ≤ 8	●	450•N	500•N	550•N	ns
t_{ACQ}	Acquisition Time ($t_{ACQ} = t_{CYC} - t_{CONV} - t_{BUSYLH}$)	8 Channels Enabled, f_{SMPL} = 200ksps	●	570	980		ns
		7 Channels Enabled, f_{SMPL} = 225ksps	●	564	924		ns
		6 Channels Enabled, f_{SMPL} = 250ksps	●	670	980		ns
		5 Channels Enabled, f_{SMPL} = 300ksps	●	553	813		ns
		4 Channels Enabled, f_{SMPL} = 350ksps	●	625	835		ns
		3 Channels Enabled, f_{SMPL} = 425ksps	●	670	830		ns
		2 Channels Enabled, f_{SMPL} = 550ksps	●	685	795		ns
		1 Channel Enabled, f_{SMPL} = 800ksps	●	670	730		ns

ADC TIMING CHARACTERISTICS

The ● denotes the specifications which apply over the full operating temperature range, otherwise specifications are at T_A = 25°C. (Note 9)

SYMBOL	PARAMETER	CONDITIONS		MIN	TYP	MAX	UNITS
t_{CNVH}	CNV High Time		●	40			ns
t_{CNVL}	CNV Low Time		●	750			ns
t_{BUSYLH}	CNV↑ to BUSY Delay	C_L = 25pF	●			30	ns
t_{QUIET}	Digital I/O Quiet Time from CNV↑		●	20			ns
t_{PDH}	PD High Time		●	40			ns
t_{PDL}	PD Low Time		●	40			ns
t_{WAKE}	REFBUF Wake-Up Time	C_{REFBUF} = 47µF, C_{REFIN} = 0.1µF			200		ms
		CMOS I/O Mode					
t_{SCKI}	SCKI Period	(Notes 18, 19)	●	10			ns
t_{SCKIH}	SCKI High Time		●	4			ns
t_{SCKIL}	SCKI Low Time		●	4			ns
$t_{SSDISCKI}$	SDI Setup Time from SCKI↑	(Note 18)	●	2			ns
$t_{HSDISCKI}$	SDI Hold Time from SCKI↑	(Note 18)	●	1			ns
$t_{DSDOSCKI}$	SDO Data Valid Delay from SCKI↑	C_L = 25pF (Note 18)	●			7.5	ns
$t_{HSDOSCKI}$	SDO Remains Valid Delay from SCKI↑	C_L = 25pF (Note 18)	●	1.5			ns
t_{SKEW}	SDO to SCKO Skew	(Note 18)	●	–1	0	1	ns
$t_{DSDOBUSYL}$	SDO Data Valid Delay from BUSY↓	C_L = 25pF (Note 18)	●	0			ns
t_{EN}	Bus Enable Time After $\overline{CS}$↓	(Note 18)	●			15	ns
t_{DIS}	Bus Relinquish Time After $\overline{CS}$↑	(Note 18)	●			15	ns
		LVDS I/O Mode					
t_{SCKI}	SCKI Period	(Note 20)	●	4			ns
t_{SCKIH}	SCKI High Time	(Note 20)	●	1.5			ns
t_{SCKIL}	SCKI Low Time	(Note 20)	●	1.5			ns
$t_{SSDISCKI}$	SDI Setup Time from SCKI	(Notes 11, 20)	●	1.2			ns
$t_{HSDISCKI}$	SDI Hold Time from SCKI	(Notes 11, 20)	●	–0.2			ns
$t_{DSDOSCKI}$	SDO Data Valid Delay from SCKI	(Notes 11, 20)	●			6	ns
$t_{HSDOSCKI}$	SDO Remains Valid Delay from SCKI	(Notes 11, 20)	●	1			ns
t_{SKEW}	SDO to SCKO Skew	(Note 11)	●	–0.4	0	0.4	ns
$t_{DSDOBUSYL}$	SDO Data Valid Delay from BUSY↓	(Note 11)	●	0			ns
t_{EN}	Bus Enable Time After $\overline{CS}$↓		●			50	ns
t_{DIS}	Bus Relinquish Time After $\overline{CS}$↑		●			15	ns

ADC TIMING CHARACTERISTICS

Note 1: Stresses beyond those listed under Absolute Maximum Ratings may cause permanent damage to the device. Exposure to any Absolute Maximum Rating condition for extended periods may affect device reliability and lifetime.

Note 2: All voltage values are with respect to GND.

Note 3: V_{DDLBYP} is the output of an internal voltage regulator, and should only be connected to a 2.2µF ceramic capacitor to bypass the pin to GND, as described in the Pin Functions section. Do not connect this pin to any external circuitry.

Note 4: When these pin voltages are taken below V_{EE} or above V_{CC}, they will be clamped by internal diodes. This product can handle input currents of up to 100mA below V_{EE} or above V_{CC} without latch-up.

Note 5: When these pin voltages are taken below GND or above V_{DD} or OV_{DD}, they will be clamped by internal diodes. This product can handle currents of up to 100mA below GND or above V_{DD} or OV_{DD} without latch-up.

Note 6: $-16.5V \le V_{EE} \le 0V$, $7.5V \le V_{CC} \le 38V$, $10V \le (V_{CC} - V_{EE}) \le 38V$, $V_{DD} = 5V$, unless otherwise specified.

Note 7: Recommended operating conditions.

Note 8: Exceeding these limits on any channel may corrupt conversion results on other channels. Driving an analog input above V_{CC} on any channel up to 10mA will not affect conversion results on other channels. Driving an analog input below V_{EE} may corrupt conversion results on other channels. Refer to Applications Information section for further details. Refer to Absolute Maximum Ratings section for pin voltage limits related to device reliability.

Note 9: $V_{CC} = 15V$, $V_{EE} = -15V$, $V_{DD} = 5V$, $OV_{DD} = 2.5V$, $f_{SMPL} = 200ksps$, internal reference and buffer, true bipolar input signal drive in bipolar SoftSpan ranges, unipolar signal drive in unipolar SoftSpan ranges, unless otherwise specified.

Note 10: Integral nonlinearity is defined as the deviation of a code from a straight line passing through the actual endpoints of the transfer curve. The deviation is measured from the center of the quantization band.

Note 11: Guaranteed by design, not subject to test.

Note 12: For bipolar SoftSpan ranges 7, 6, 3, and 2, zero-scale error is the offset voltage measured from –0.5LSB when the output code flickers between 00 0000 0000 0000 0000 and 11 1111 1111 1111 1111. Full-scale error for these SoftSpan ranges is the worst-case deviation of the first and last code transitions from ideal and includes the effect of offset error. For unipolar SoftSpan ranges 5, 4, and 1, zero-scale error is the offset voltage measured from 0.5LSB when the output code flickers between 00 0000 0000 0000 0000 and 00 0000 0000 0000 0001. Full-scale error for these SoftSpan ranges is the worst-case deviation of the last code transition from ideal and includes the effect of offset error.

Note 13: All specifications in dB are referred to a full-scale input in the relevant SoftSpan input range, except for crosstalk, which is referred to the crosstalk injection signal amplitude.

Note 14: Temperature coefficient is calculated by dividing the maximum change in output voltage by the specified temperature range.

Note 15: When REFBUF is overdriven, the internal reference buffer must be disabled by setting REFIN = 0V.

Note 16: I_{REFBUF} varies proportionally with sample rate and the number of active channels.

Note 17: Analog input buffer supply currents from I_{VCC} and I_{VEE} are reduced outside the acquisition period. Refer to nap mode in Applications Information section.

Note 18: Parameter tested and guaranteed at $OV_{DD} = 1.71V$, $OV_{DD} = 2.5V$, and $OV_{DD} = 5.25V$.

Note 19: A t_{SCKI} period of 10ns minimum allows a shift clock frequency of up to 100MHz for rising edge capture.

Note 20: $V_{ICM} = 1.2V$, $V_{ID} = 350mV$ for LVDS differential input pairs.

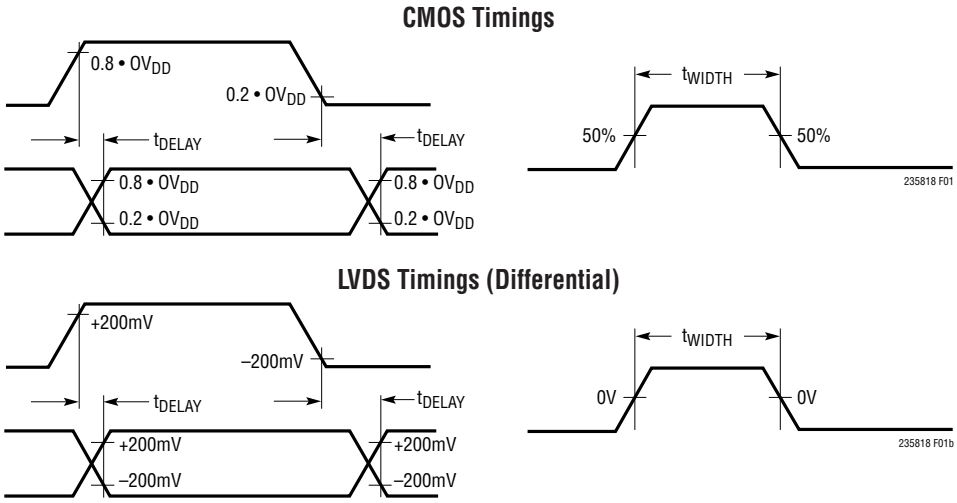

Figure 1. Voltage Levels for Timing Specifications

TYPICAL PERFORMANCE CHARACTERISTICS

T_A = 25°C, V_{CC} = +15V, V_{EE} = –15V, V_{DD} = 5V, OV_{DD} = 2.5V, Internal Reference and Buffer (V_{REFBUF} = 4.096V), f_{SMPL} = 200ksps, unless otherwise noted.

Integral Nonlinearity vs Output Code and Channel

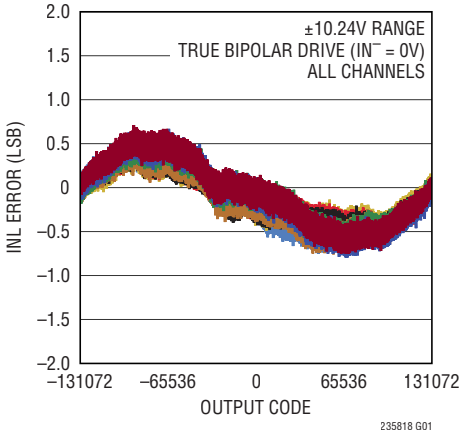

Integral Nonlinearity vs Output Code and Channel

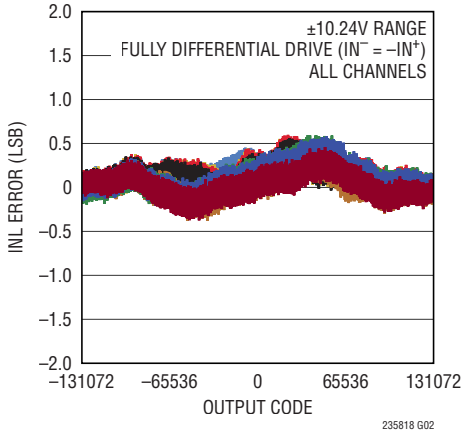

Differential Nonlinearity vs Output Code and Channel

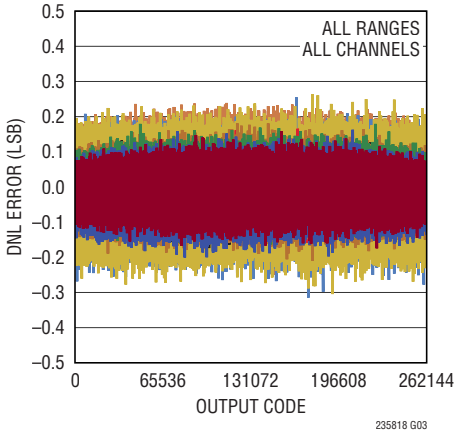

Integral Nonlinearity vs Output Code and Range

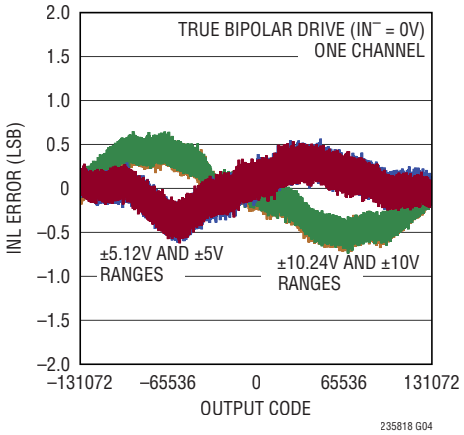

Integral Nonlinearity vs Output Code and Range

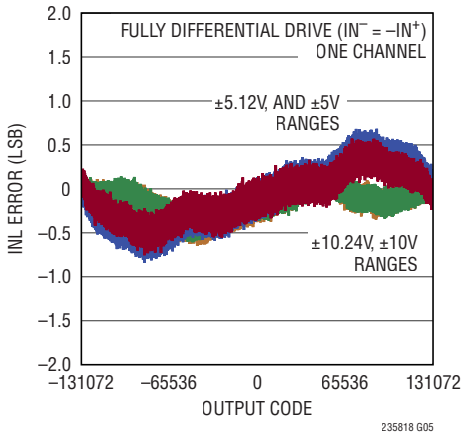

Integral Nonlinearity vs Output Code and Range

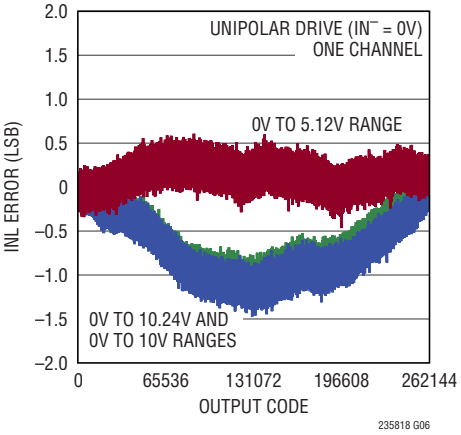

Integral Nonlinearity vs Output Code

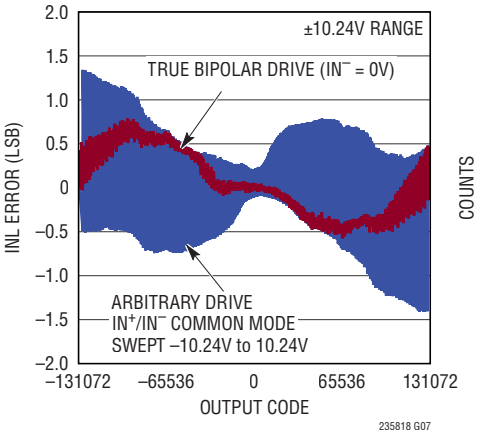

DC Histogram (Zero-Scale)

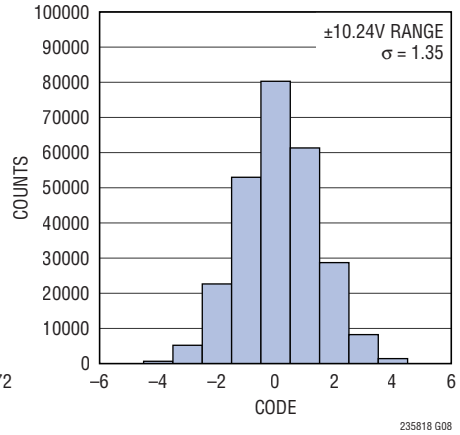

DC Histogram (Near Full-Scale)

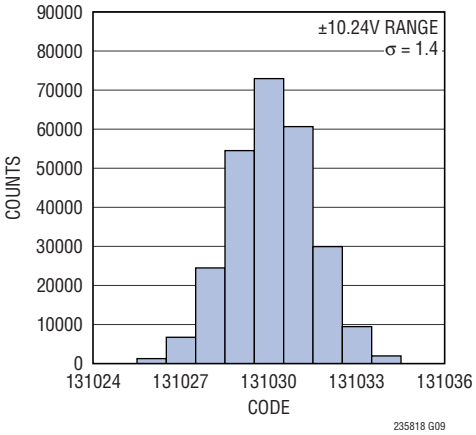

TYPICAL PERFORMANCE CHARACTERISTICS

T_A = 25°C, V_{CC} = +15V, V_{EE} = –15V, V_{DD} = 5V, OV_{DD} = 2.5V, Internal Reference and Buffer (V_{REFBUF} = 4.096V), f_{SMPL} = 200ksps, unless otherwise noted.

32k Point FFT f_{SMPL} = 200kHz, f_{IN} = 2kHz

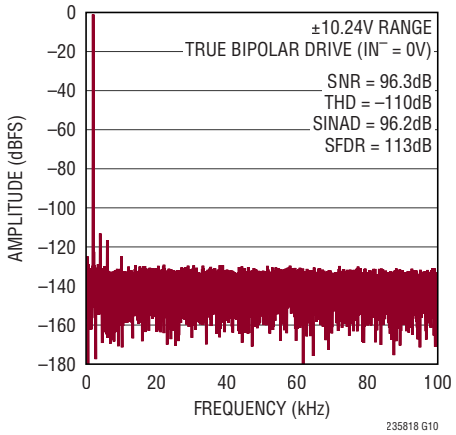

32k Point FFT f_{SMPL} = 200kHz, f_{IN} = 2kHz

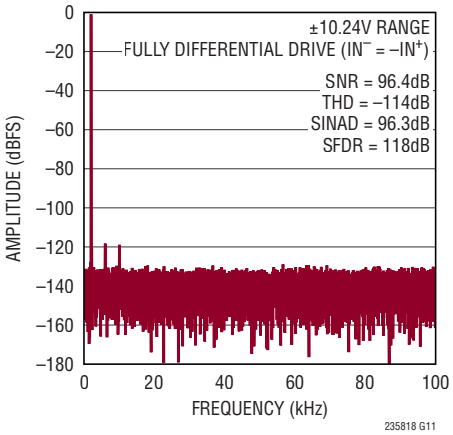

32k Point Arbitrary Two-Tone FFT f_{SMPL} = 200kHz, IN^+ = –7dBFS 2kHz Sine, IN^- = –7dBFS 3.1kHz Sine

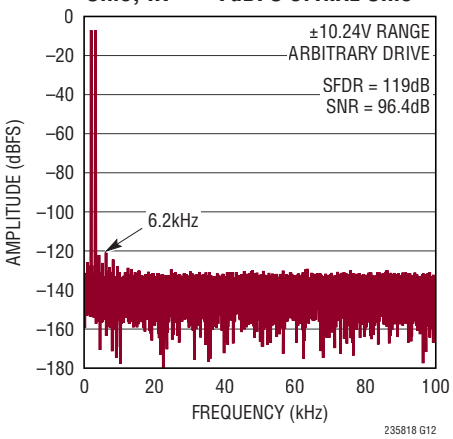

32k Point FFT f_{SMPL} = 200kHz, f_{IN} = 2kHz

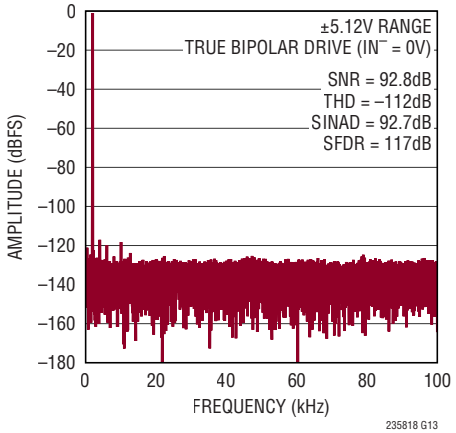

SNR, SINAD vs V_{REFBUF}, f_{IN} = 2kHz

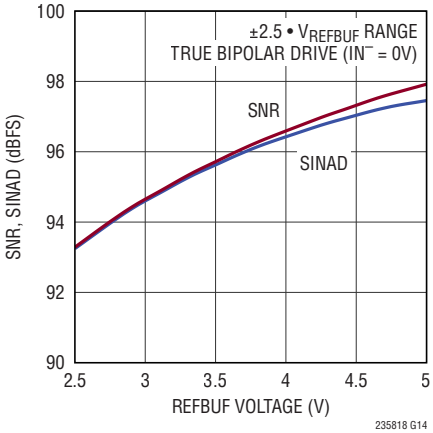

THD, Harmonics vs V_{REFBUF}, f_{IN} = 2kHz

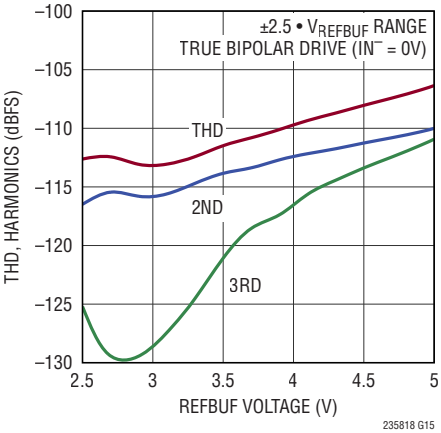

SNR, SINAD vs Input Frequency

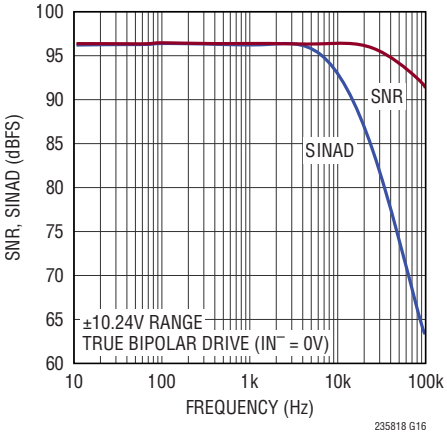

THD vs Input Frequency

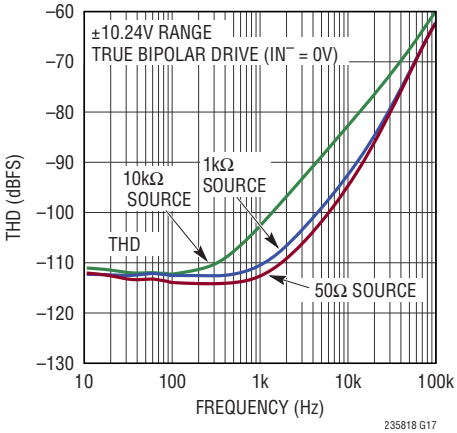

THD, Harmonics vs Input Common Mode, f_{IN} = 2kHz

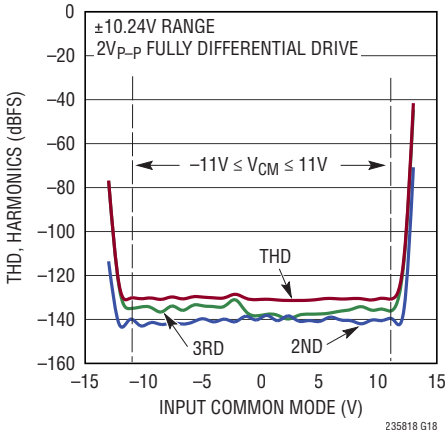

TYPICAL PERFORMANCE CHARACTERISTICS

T_A = 25°C, V_{CC} = +15V, V_{EE} = –15V, V_{DD} = 5V, OV_{DD} = 2.5V, Internal Reference and Buffer (V_{REFBUF} = 4.096V), f_{SMPL} = 200ksps, unless otherwise noted.

SNR, SINAD vs Input Level, f_{IN} = 2kHz

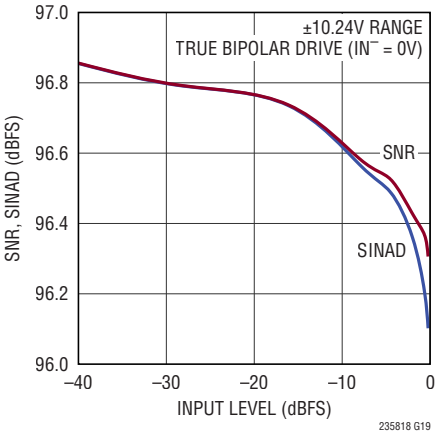

CMRR vs Input Frequency and Channel

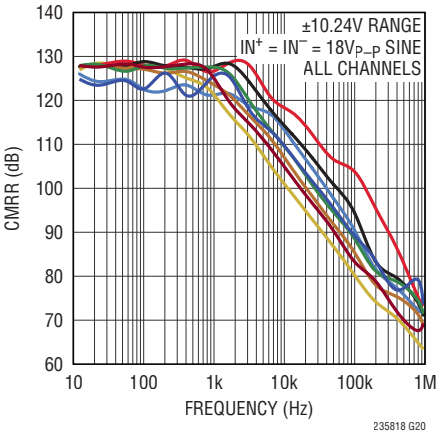

Crosstalk vs Input Frequency and Channel

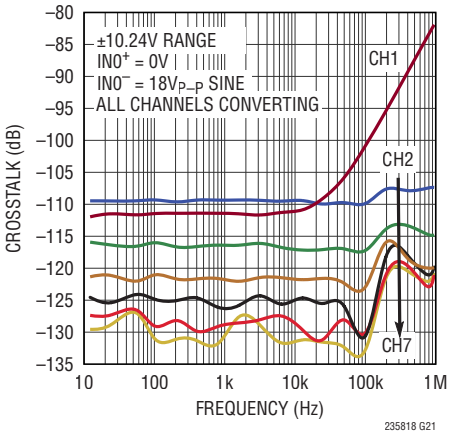

SNR, SINAD vs Temperature, f_{IN} = 2kHz

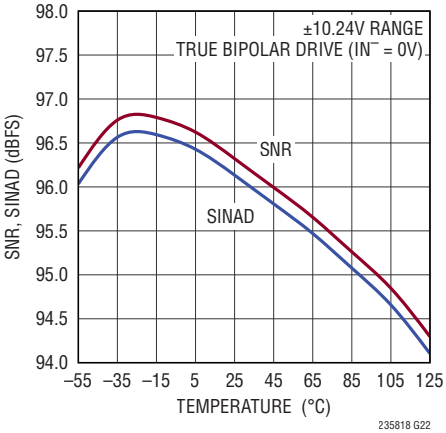

THD, Harmonics vs Temperature, f_{IN} = 2kHz

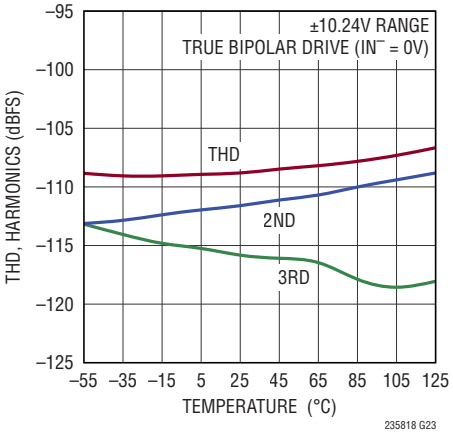

INL, DNL vs Temperature

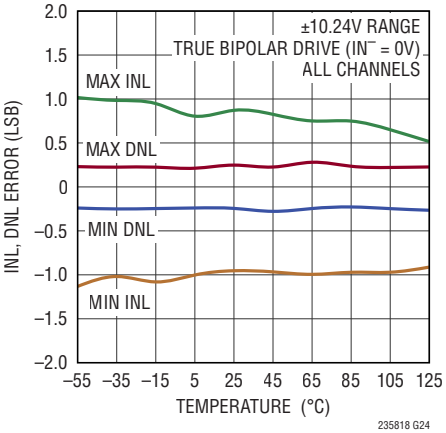

Analog Input Leakage Current vs Temperature

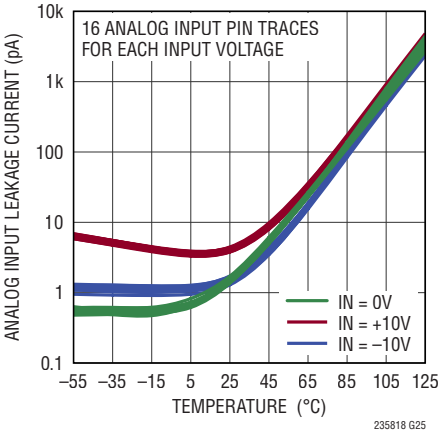

Positive Full-Scale Error vs Temperature and Channel

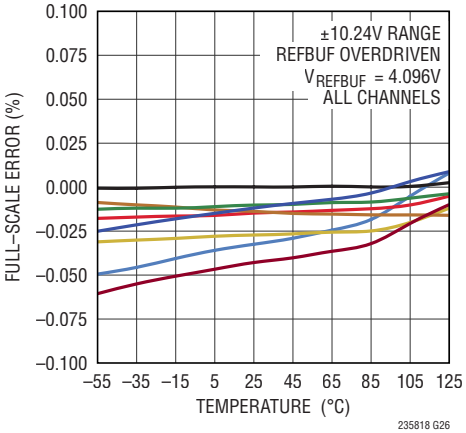

Zero-Scale Error vs Temperature and Channel

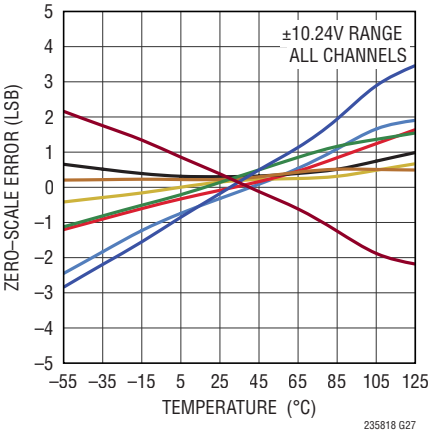

TYPICAL PERFORMANCE CHARACTERISTICS

T_A = 25°C, V_{CC} = +15V, V_{EE} = –15V, V_{DD} = 5V, OV_{DD} = 2.5V, Internal Reference and Buffer (V_{REFBUF} = 4.096V), f_{SMPL} = 200ksps, unless otherwise noted.

Supply Current vs Temperature

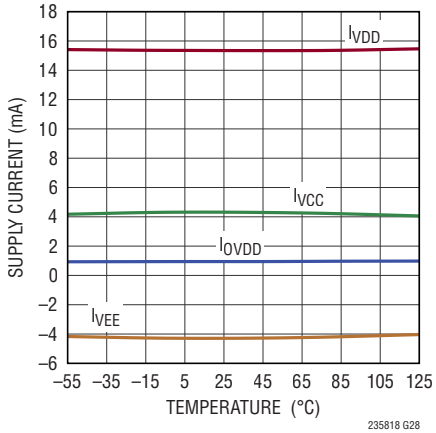

Power-Down Current vs Temperature

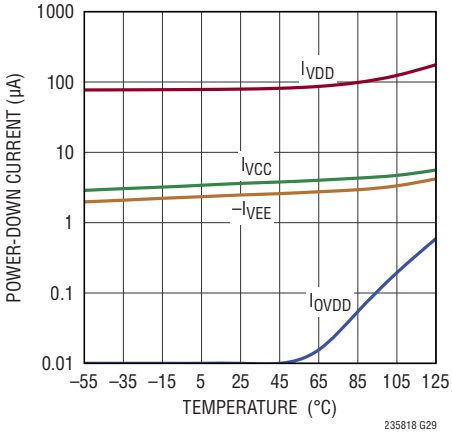

PSRR vs Frequency

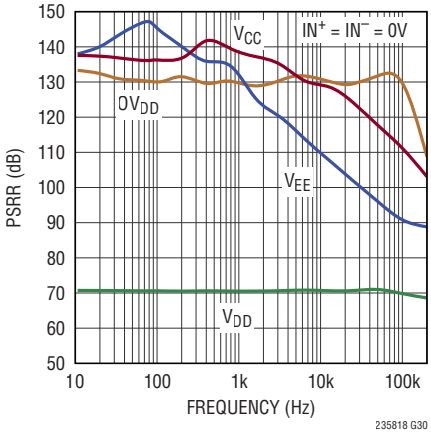

Offset Error vs Input Common Mode

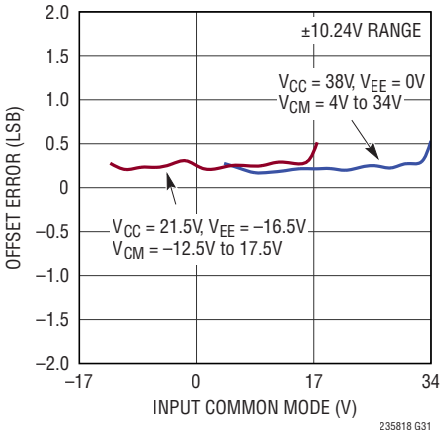

Internal Reference Output vs Temperature

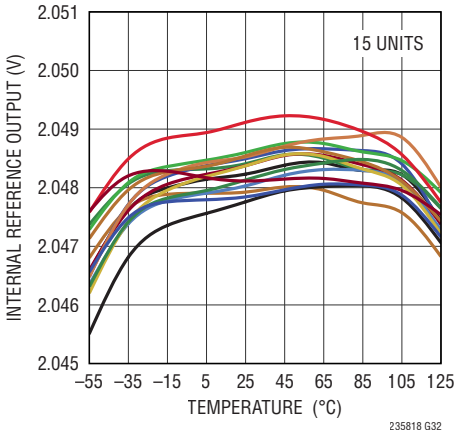

Supply Current vs Sampling Rate

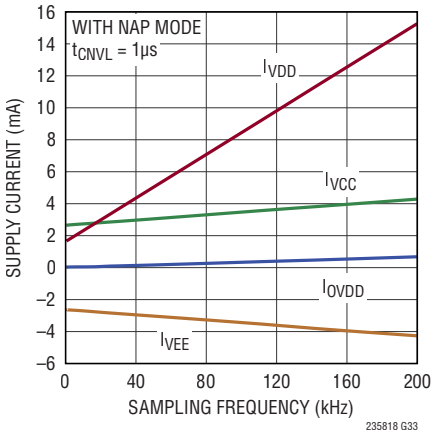

Power Dissipation vs Sampling Rate, N-Channels Enabled

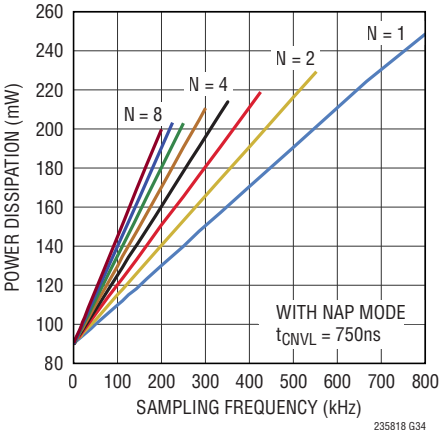

Step Response (Large-Signal Settling)

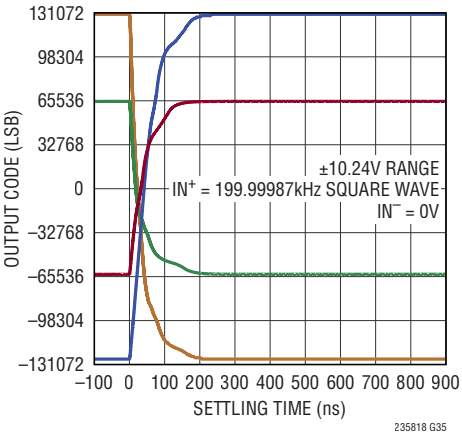

Step Response (Fine Settling)

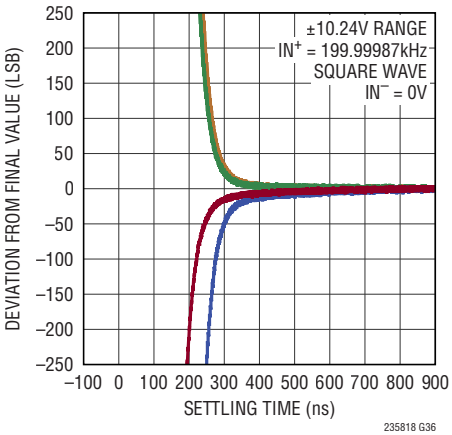

PIN FUNCTIONS

Pins that are the Same for All Digital I/O Modes

IN0+/IN0– to IN7+/IN7– (Pins 14/13, 12/11, 10/9, 8/7, 6/5, 4/3, 2/1, and 48/47): Positive and Negative Analog Inputs, Channels 0 to 7. The converter simultaneously samples and digitizes ($V_{IN}+ – V_{IN}–$) for all channels. Wide input common mode range ($V_{EE} + 4V \leq V_{CM} \leq V_{CC} – 4V$) and high common mode rejection allow the inputs to accept a wide variety of signal swings. Full-scale input range is determined by the channel's SoftSpan configuration.

GND (Pins 15, 18, 20, 30, 41, 44, 46): Ground. Solder all GND pins to a solid ground plane.

V_{CC} (Pin 16): Positive High Voltage Power Supply. The range of V_{CC} is 7.5V to 38V with respect to GND and 10V to 38V with respect to V_{EE}. Bypass V_{CC} to GND close to the pin with a 0.1µF ceramic capacitor.

V_{EE} (Pins 17, 45): Negative High Voltage Power Supply. The range of V_{EE} is 0V to –16.5V with respect to GND and –10V to –38V with respect to V_{CC}. Connect Pins 17 and 45 together and bypass the V_{EE} network to GND close to Pin 17 with a 0.1µF ceramic capacitor. In applications where V_{EE} is shorted to GND, this capacitor may be omitted.

REFIN (Pin 19): Bandgap Reference Output/Reference Buffer Input. An internal bandgap reference nominally outputs 2.048V on this pin. An internal reference buffer amplifies V_{REFIN} to create the converter master reference voltage $V_{REFBUF} = 2 \bullet V_{REFIN}$ on the REFBUF pin. When using the internal reference, bypass REFIN to GND (Pin 20) close to the pin with a 0.1µF ceramic capacitor to filter the bandgap output noise. If more accuracy is desired, overdrive REFIN with an external reference in the range of 1.25V to 2.2V. Do not load this pin when internal reference is used.

REFBUF (Pin 21): Internal Reference Buffer Output. An internal reference buffer amplifies V_{REFIN} to create the converter master reference voltage $V_{REFBUF} = 2 \bullet V_{REFIN}$ on this pin, nominally 4.096V when using the internal bandgap reference. Bypass REFBUF to GND (Pin 20) close to the pin with a 47µF ceramic capacitor. The internal reference buffer may be disabled by grounding its input at REFIN. With the buffer disabled, overdrive REFBUF with an external reference voltage in the range of 2.5V to 5V. When using the internal reference buffer, limit the loading of any external circuitry connected to REFBUF to less than 200µA. Using a high input impedance amplifier to buffer V_{REFBUF} to any external circuits is recommended.

PD (Pin 22): Power Down Input. When this pin is brought high, the LTC2358-18 is powered down and subsequent conversion requests are ignored. If this occurs during a conversion, the device powers down once the conversion completes. If this pin is brought high twice without an intervening conversion, an internal global reset is initiated, equivalent to a power-on-reset event. Logic levels are determined by OV_{DD}.

LVDS/$\overline{\text{CMOS}}$ (Pin 23): I/O Mode Select. Tie this pin to OV_{DD} to select LVDS I/O mode, or to ground to select CMOS I/O mode. Logic levels are determined by OV_{DD}.

CNV (Pin 24): Conversion Start Input. A rising edge on this pin puts the internal sample-and-holds into the hold mode and initiates a new conversion. CNV is not gated by $\overline{CS}$, allowing conversions to be initiated independent of the state of the serial I/O bus.

BUSY (Pin 38): Busy Output. The BUSY signal indicates that a conversion is in progress. This pin transitions low-to-high at the start of each conversion and stays high until the conversion is complete. Logic levels are determined by OV_{DD}.

V_{DDLBYP} (Pin 40): Internal 2.5V Regulator Bypass Pin. The voltage on this pin is generated via an internal regulator operating off of V_{DD}. This pin must be bypassed to GND close to the pin with a 2.2µF ceramic capacitor. Do not connect this pin to any external circuitry.

V_{DD} (Pins 42, 43): 5V Power Supply. The range of V_{DD} is 4.75V to 5.25V. Connect Pins 42 and 43 together and bypass the V_{DD} network to GND with a shared 0.1µF ceramic capacitor close to the pins.

PIN FUNCTIONS

CMOS I/O Mode

SDO0 to SDO7 (Pins 25, 26, 27, 28, 33, 34, 35, and 36): CMOS Serial Data Outputs, Channels 0 to 7. The most recent conversion result along with channel configuration information is clocked out onto the SDO pins on each rising edge of SCKI. Output data formatting is described in the Digital Interface section. Leave unused SDO outputs unconnected. Logic levels are determined by OV_{DD}.

SCKI (Pin 29): CMOS Serial Clock Input. Drive SCKI with the serial I/O clock. SCKI rising edges latch serial data in on SDI and clock serial data out on SDO0 to SDO7. For standard SPI bus operation, capture output data at the receiver on rising edges of SCKI. SCKI is allowed to idle either high or low. Logic levels are determined by OV_{DD}.

OV_{DD} (Pin 31): I/O Interface Power Supply. In CMOS I/O mode, the range of OV_{DD} is 1.71V to 5.25V. Bypass OV_{DD} to GND (Pin 30) close to the pin with a 0.1µF ceramic capacitor.

SCKO (Pin 32): CMOS Serial Clock Output. SCKI rising edges trigger transitions on SCKO that are skew-matched to the serial output data streams on SDO0 to SDO7. The resulting SCKO frequency is half that of SCKI. Rising and falling edges of SCKO may be used to capture SDO data at the receiver (FPGA) in double data rate (DDR) fashion. For standard SPI bus operation, SCKO is not used and should be left unconnected. SCKO is forced low at the falling edge of BUSY. Logic levels are determined by OV_{DD}.

SDI (Pin 37): CMOS Serial Data Input. Drive this pin with the desired 24-bit SoftSpan configuration word (see Table 1a), latched on the rising edges of SCKI. If all channels will be configured to operate only in SoftSpan 7, tie SDI to OV_{DD}. Logic levels are determined by OV_{DD}.

$\overline{CS}$ (Pin 39): Chip Select Input. The serial data I/O bus is enabled when $\overline{CS}$ is low and is disabled and Hi-Z when $\overline{CS}$ is high. $\overline{CS}$ also gates the external shift clock, SCKI. Logic levels are determined by OV_{DD}.

LVDS I/O Mode

SDO0, SDO7, SDI (Pins 25, 36, and 37): CMOS Serial Data I/O. In LVDS I/O mode, these pins are Hi-Z.

SDI^+/SDI^- (Pins 26/27): LVDS Positive and Negative Serial Data Input. Differentially drive SDI^+/SDI^- with the desired 24-bit SoftSpan configuration word (see Table 1a), latched on both the rising and falling edges of $SCKI^+/SCKI^-$. The SDI^+/SDI^- input pair is internally terminated with a 100Ω differential resistor when $\overline{CS}$ is low.

$SCKI^+/SCKI^-$ (Pins 28/29): LVDS Positive and Negative Serial Clock Input. Differentially drive $SCKI^+/SCKI^-$ with the serial I/O clock. $SCKI^+/SCKI^-$ rising and falling edges latch serial data in on SDI^+/SDI^- and clock serial data out on SDO^+/SDO^-. Idle $SCKI^+/SCKI^-$ low, including when transitioning $\overline{CS}$. The $SCKI^+/SCKI^-$ input pair is internally terminated with a 100Ω differential resistor when $\overline{CS}$ is low.

OV_{DD} (Pin 31): I/O Interface Power Supply. In LVDS I/O mode, the range of OV_{DD} is 2.375V to 5.25V. Bypass OV_{DD} to GND (Pin 30) close to the pin with a 0.1µF ceramic capacitor.

$SCKO^+/SCKO^-$ (Pins 32/33): LVDS Positive and Negative Serial Clock Output. $SCKO^+/SCKO^-$ outputs a copy of the input serial I/O clock received on $SCKI^+/SCKI^-$, skew-matched with the serial output data stream on SDO^+/SDO^-. Use the rising and falling edges of $SCKO^+/SCKO^-$ to capture SDO^+/SDO^- data at the receiver (FPGA). The $SCKO^+/SCKO^-$ output pair must be differentially terminated with a 100Ω resistor at the receiver (FPGA).

SDO^+/SDO^- (Pins 34/35): LVDS Positive and Negative Serial Data Output. The most recent conversion result along with channel configuration information is clocked out onto SDO^+/SDO^- on both rising and falling edges of $SCKI^+/SCKI^-$, beginning with channel 0. The SDO^+/SDO^- output pair must be differentially terminated with a 100Ω resistor at the receiver (FPGA).

$\overline{CS}$ (Pin 39): Chip Select Input. The serial data I/O bus is enabled when $\overline{CS}$ is low, and is disabled and Hi-Z when $\overline{CS}$ is high. $\overline{CS}$ also gates the external shift clock, $SCKI^+/SCKI^-$. The internal 100Ω differential termination resistors on the $SCKI^+/SCKI^-$ and SDI^+/SDI^- input pairs are disabled when $\overline{CS}$ is high. Logic levels are determined by OV_{DD}.

CONFIGURATION TABLES

Table 1a. SoftSpan Configuration Table. Use This Table with Table 1b to Choose Independent Binary SoftSpan Codes SS[2:0] for Each Channel Based on Desired Analog Input Range. Combine SoftSpan Codes to Form 24-Bit SoftSpan Configuration Word S[23:0]. Use Serial Interface to Write SoftSpan Configuration Word to LTC2358-18, as shown in Figure 18

BINARY SoftSpan CODE SS[2:0]	ANALOG INPUT RANGE	FULL SCALE RANGE	BINARY FORMAT OF CONVERSION RESULT
111	$\pm 2.5 \cdot V_{REFBUF}$	$5 \cdot V_{REFBUF}$	Two's Complement
110	$\pm 2.5 \cdot V_{REFBUF}/1.024$	$5 \cdot V_{REFBUF}/1.024$	Two's Complement
101	$0V$ to $2.5 \cdot V_{REFBUF}$	$2.5 \cdot V_{REFBUF}$	Straight Binary
100	$0V$ to $2.5 \cdot V_{REFBUF}/1.024$	$2.5 \cdot V_{REFBUF}/1.024$	Straight Binary
011	$\pm 1.25 \cdot V_{REFBUF}$	$2.5 \cdot V_{REFBUF}$	Two's Complement
010	$\pm 1.25 \cdot V_{REFBUF}/1.024$	$2.5 \cdot V_{REFBUF}/1.024$	Two's Complement
001	$0V$ to $1.25 \cdot V_{REFBUF}$	$1.25 \cdot V_{REFBUF}$	Straight Binary
000	Channel Disabled	Channel Disabled	All Zeros

Table 1b. Reference Configuration Table. The LTC2358-18 Supports Three Reference Configurations. Analog Input Range Scales with the Converter Master Reference Voltage, V_{REFBUF}

REFERENCE CONFIGURATION	V_{REFIN}	V_{REFBUF}	BINARY SoftSpan CODE SS[2:0]	ANALOG INPUT RANGE
Internal Reference with Internal Buffer	2.048V	4.096V	111	±10.24V
			110	±10V
			101	0V to 10.24V
			100	0V to 10V
			011	±5.12V
			010	±5V
			001	0V to 5.12V
External Reference with Internal Buffer (REFIN Pin Externally Overdriven)	1.25V (Min Value)	2.5V	111	±6.25V
			110	±6.104V
			101	0V to 6.25V
			100	0V to 6.104V
			011	±3.125V
			010	±3.052V
			001	0V to 3.125V
	2.2V (Max Value)	4.4V	111	±11V
			110	±10.742V
			101	0V to 11V
			100	0V to 10.742V
			011	±5.5V
			010	±5.371V
			001	0V to 5.5V

CONFIGURATION TABLES

Table 1b. Reference Configuration Table (Continued). The LTC2358-18 Supports Three Reference Configurations. Analog Input Range Scales with the Converter Master Reference Voltage, V_{REFBUF}

REFERENCE CONFIGURATION	V_{REFIN}	V_{REFBUF}	BINARY SoftSpan CODE SS[2:0]	ANALOG INPUT RANGE
External Reference Unbuffered (REFBUF Pin Externally Overdriven, REFIN Pin Grounded)	0V	2.5V (Min Value)	111	±6.25V
			110	±6.104V
			101	0V to 6.25V
			100	0V to 6.104V
			011	±3.125V
			010	±3.052V
			001	0V to 3.125V
	0V	5V (Max Value)	111	±12.5V
			110	±12.207V
			101	0V to 12.5V
			100	0V to 12.207V
			011	±6.25V
			010	±6.104V
			001	0V to 6.25V

FUNCTIONAL BLOCK DIAGRAM

CMOS I/O Mode

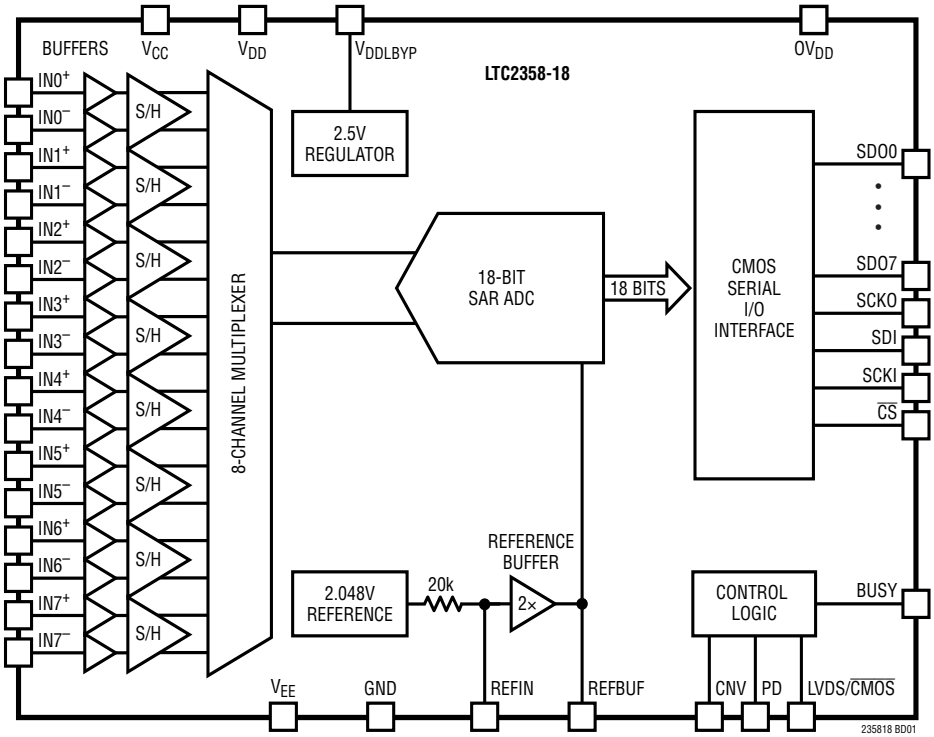

LVDS I/O Mode

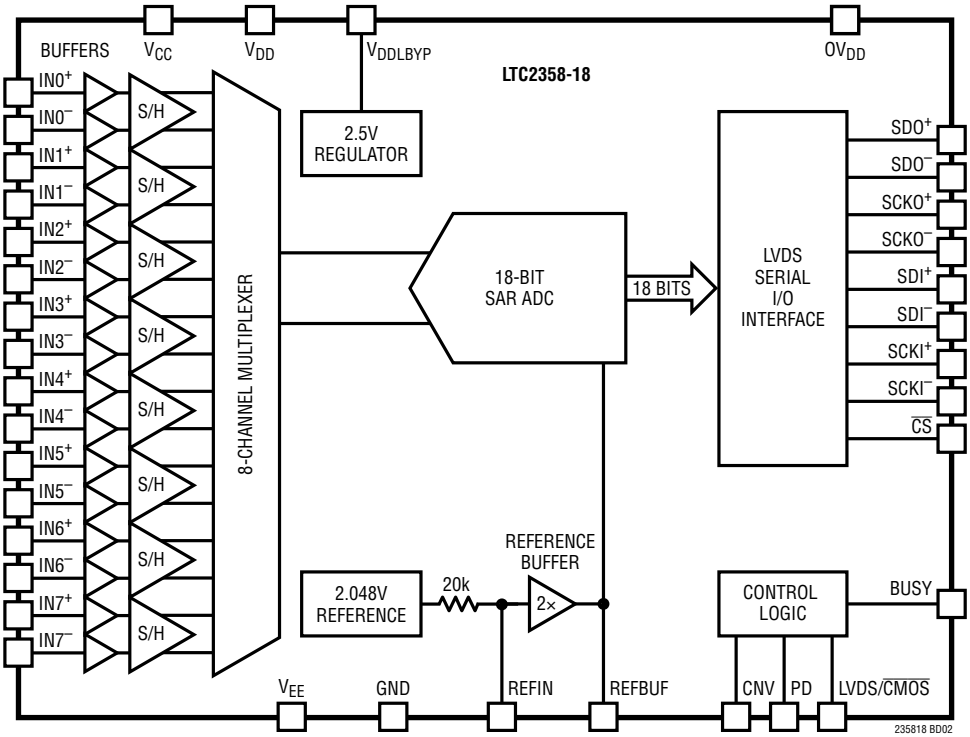

TIMING DIAGRAM

CMOS I/O Mode

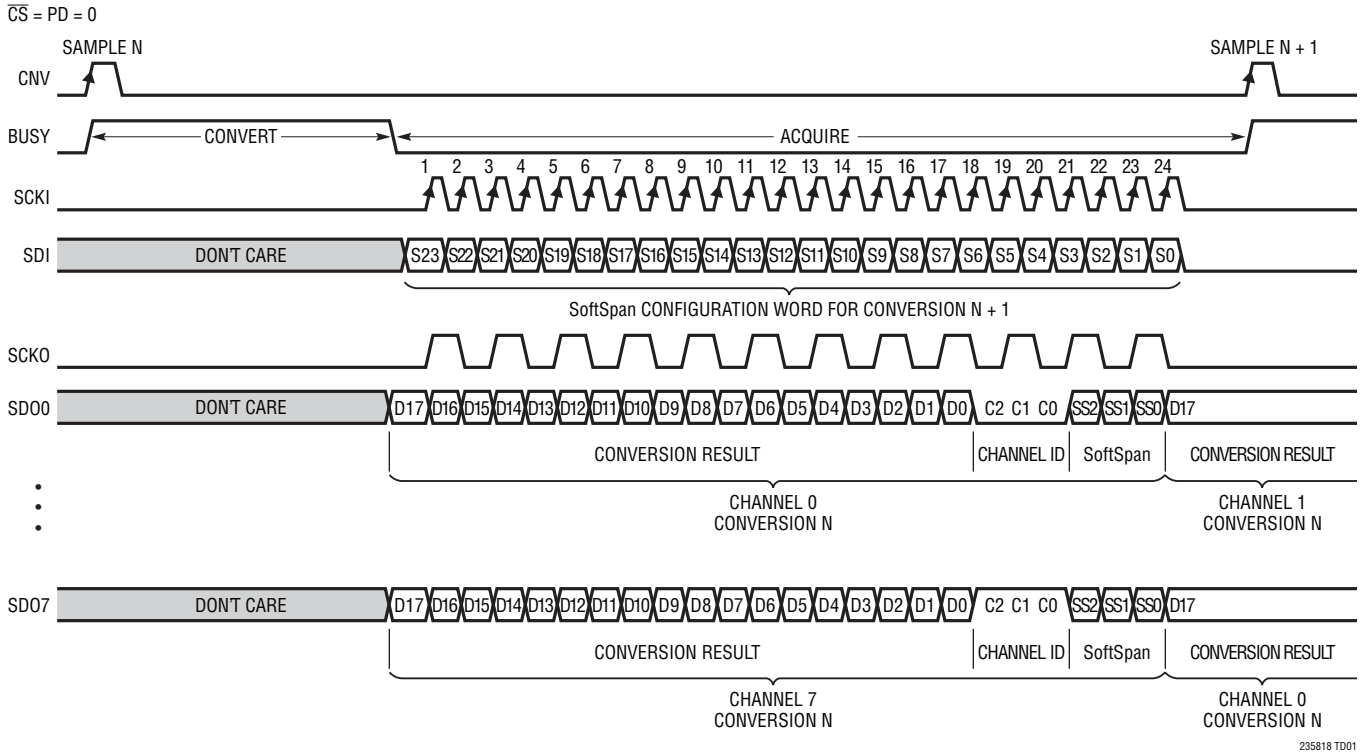

LVDS I/O Mode

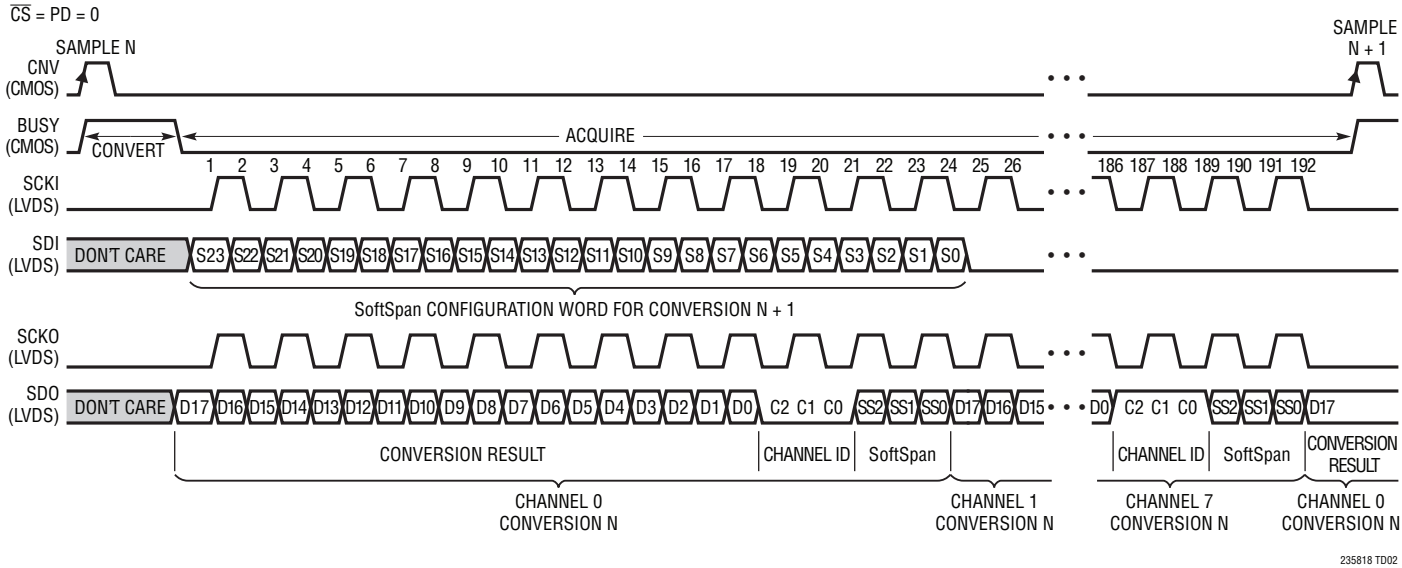

APPLICATIONS INFORMATION

OVERVIEW

The LTC2358-18 is an 18-bit, low noise 8-channel simultaneous sampling successive approximation register (SAR) ADC with buffered differential, wide common mode range picoamp inputs. The ADC operates from a 5V low voltage supply and flexible high voltage supplies, nominally ±15V. Using the integrated low-drift reference and buffer (V_{REFBUF} = 4.096V nominal), each channel of this SoftSpan ADC can be independently configured on a conversion-by-conversion basis to accept ±10.24V, 0V to 10.24V, ±5.12V, or 0V to 5.12V signals. The input signal range may be expanded up to ±12.5V using an external 5V reference. Individual channels may also be disabled to increase throughput on the remaining channels.

The integrated picoamp-input analog buffers, wide input common mode range, and 128dB CMRR of the LTC2358-18 allow the ADC to directly digitize a variety of signals using minimal board space and power. This input signal flexibility, combined with ±3.5LSB INL, no missing codes at 18 bits, and 96.4dB SNR, makes the LTC2358-18 an ideal choice for many high voltage applications requiring wide dynamic range.

The absolute common mode input range (V_{EE} + 4V to V_{CC} – 4V) is determined by the choice of high voltage supplies. These supplies may be biased asymmetrically around ground and include the ability for V_{EE} to be tied directly to ground.

The LTC2358-18 supports pin-selectable SPI CMOS (1.8V to 5V) and LVDS serial interfaces, enabling it to communicate equally well with legacy microcontrollers and modern FPGAs. In CMOS mode, applications may employ between one and eight lanes of serial output data, allowing the user to optimize bus width and data throughput. The LTC2358-18 typically dissipates 219mW when converting eight channels simultaneously at 200ksps per channel. Optional nap and power down modes may be employed to further reduce power consumption during inactive periods.

CONVERTER OPERATION

The LTC2358-18 operates in two phases. During the acquisition phase, the sampling capacitors in each channel's sample-and-hold (S/H) circuit connect to their respective analog input buffers, which track the differential analog input voltage (V_{IN}+ – V_{IN}–). A rising edge on the CNV pin transitions all channels' S/H circuits from track mode to hold mode, simultaneously sampling the input signals on all channels and initiating a conversion. During the conversion phase, each channel's sampling capacitors are connected, one channel at a time, to an 18-bit charge redistribution capacitor D/A converter (CDAC). The CDAC is sequenced through a successive approximation algorithm, effectively comparing the sampled input voltage with binary-weighted fractions of the channel's SoftSpan full-scale range (e.g., $V_{FSR}/2$, $V_{FSR}/4$ … $V_{FSR}/262144$) using a differential comparator. At the end of this process, the CDAC output approximates the channel's sampled analog input. Once all channels have been converted in this manner, the ADC control logic prepares the 18-bit digital output codes from each channel for serial transfer.

TRANSFER FUNCTION

The LTC2358-18 digitizes each channel's full-scale voltage range into 2^{18} levels. In conjunction with the ADC master reference voltage, V_{REFBUF}, a channel's SoftSpan configuration determines its input voltage range, full-scale range, LSB size, and the binary format of its conversion result, as shown in Tables 1a and 1b. For example, employing the internal reference and buffer (V_{REFBUF} = 4.096V nominal), SoftSpan 7 configures a channel to accept a ±10.24V bipolar analog input voltage range, which corresponds to a 20.48V full-scale range with a 78.125µV LSB. Other SoftSpan configurations and reference voltages may be employed to convert both larger and smaller bipolar and unipolar input ranges. Conversion results are output in two's complement binary format for all bipolar SoftSpan ranges, and in straight binary format for all unipolar

APPLICATIONS INFORMATION

SoftSpan ranges. The ideal two's complement transfer function is shown in Figure 2, while the ideal straight binary transfer function is shown in Figure 3.

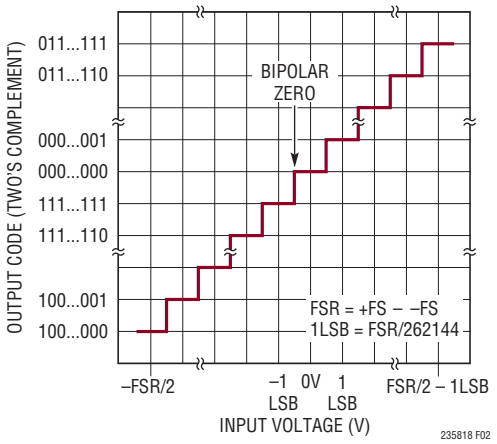

Figure 2. LTC2358-18 Two's Complement Transfer Function

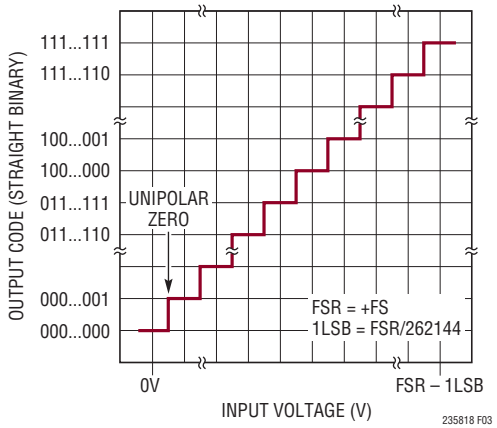

Figure 3. LTC2358-18 Straight Binary Transfer Function

BUFFERED ANALOG INPUTS

Each channel of the LTC2358-18 simultaneously samples the voltage difference ($V_{IN}+ – V_{IN}–$) between its analog input pins over a wide common mode input range while attenuating unwanted signals common to both input pins by the common-mode rejection ratio (CMRR) of the ADC. Wide common mode input range coupled with high CMRR allows the $IN^+/IN^–$ analog inputs to swing with an arbitrary relationship to each other, provided each pin remains between (V_{EE} + 4V) and (V_{CC} – 4V). This feature of the LTC2358-18 enables it to accept a wide variety of signal swings, including traditional classes of analog input signals such as pseudo-differential unipolar, pseudo-differential true bipolar, and fully differential, simplifying signal chain design. For conversion of signals extending to V_{EE}, the unbuffered LTC2348-18 ADC is recommended.

The wide operating range of the high voltage supplies offers further input common mode flexibility. As long as the voltage difference limits of $10V \le (V_{CC} – V_{EE}) \le 38V$ are observed, V_{CC} and V_{EE} may be independently biased anywhere within their own individually allowed operating ranges, including the ability for V_{EE} to be tied directly to ground. This feature enables the common mode input range of the LTC2358-18 to be tailored to specific application requirements.

In all SoftSpan ranges, each channel's analog inputs can be modeled by the equivalent circuit shown in Figure 4. At the start of acquisition, the sampling capacitors (C_{SAMP}) connect to the integrated buffers $Buffer^+/Buffer^–$ through the sampling switches. The sampled voltage is reset during the conversion process and is therefore re-acquired for each new conversion.

The diodes between the inputs and the V_{CC} and V_{EE} supplies provide input ESD protection. While within the supply voltages, the analog inputs of the LTC2358-18 draw only 5pA typical DC leakage current and the ESD protection diodes don't turn on. This offers a significant advantage over external op amp buffers, which often have diode protection that turns on during transients and corrupts the voltage on any filter capacitors at their inputs.

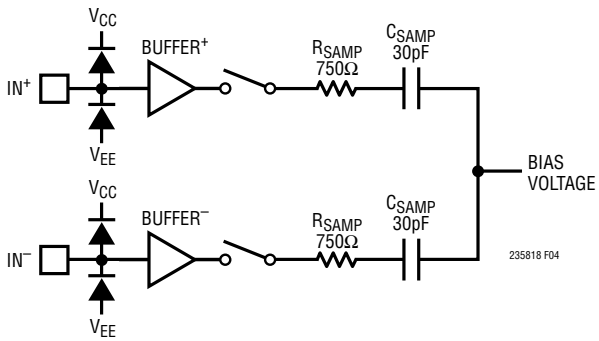

Figure 4. Equivalent Circuit for Differential Analog Inputs, Single Channel Shown

APPLICATIONS INFORMATION

Bipolar SoftSpan Input Ranges

For channels configured in SoftSpan ranges 7, 6, 3, or 2, the LTC2358-18 digitizes the differential analog input voltage ($V_{IN}+ - V_{IN}-$) over a bipolar span of $\pm2.5 \bullet V_{REFBUF}$, $\pm2.5 \bullet V_{REFBUF}/1.024$, $\pm1.25 \bullet V_{REFBUF}$, or $\pm1.25 \bullet V_{REFBUF}/1.024$, respectively, as shown in Table 1a. These SoftSpan ranges are useful for digitizing input signals where IN^+ and IN^- swing above and below each other. Traditional examples include fully differential input signals, where IN^+ and IN^- are driven 180 degrees out-of-phase with respect to each other centered around a common mode voltage ($V_{IN}+ + V_{IN}-$)/2, and pseudo-differential true bipolar input signals, where IN^+ swings above and below a ground reference level, driven on IN^-. Regardless of the chosen SoftSpan range, the wide common mode input range and high CMRR of the IN^+/IN^- analog inputs allow them to swing with an arbitrary relationship to each other, provided each pin remains between (V_{CC} – 4V) and (V_{EE} + 4V). The output data format for all bipolar SoftSpan ranges is two's complement.

Unipolar SoftSpan Input Ranges

For channels configured in SoftSpan ranges 5, 4, or 1, the LTC2358-18 digitizes the differential analog input voltage ($V_{IN}+ - V_{IN}-$) over a unipolar span of 0V to $2.5 \bullet V_{REFBUF}$, 0V to $2.5 \bullet V_{REFBUF}/1.024$, or 0V to $1.25 \bullet V_{REFBUF}$, respectively, as shown in Table 1a. These SoftSpan ranges are useful for digitizing input signals where IN^+ remains above IN^-. A traditional example includes pseudo-differential unipolar input signals, where IN^+ swings above a ground reference level, driven on IN^-. Regardless of the chosen SoftSpan range, the wide common mode input range and high CMRR of the IN^+/IN^- analog inputs allow them to swing with an arbitrary relationship to each other, provided each pin remains between (V_{CC} – 4V) and (V_{EE} + 4V). The output data format for all unipolar SoftSpan ranges is straight binary.

INPUT DRIVE CIRCUITS

The CMOS buffer input stage offers a very high degree of transient isolation from the sampling process. Most sensors, signal conditioning amplifiers and filter networks with less than 10kΩ of impedance can drive the passive 3pF analog input capacitance directly. For higher impedances and slow-settling circuits, add a 680pF capacitor at the pins to maintain the full DC accuracy of the LTC2358-18.

The very high input impedance of the unity gain buffers in the LTC2358-18 greatly reduces the input drive requirements and makes it possible to include optional RC filters with kΩ impedance and arbitrarily slow time constants for anti-aliasing or other purposes. Micropower op amps with limited drive capability are also well suited to drive the high impedance analog inputs directly.

The LTC2358-18 features proprietary circuitry to achieve exceptional internal crosstalk isolation between channels (109dB typical). The PC board wiring to the analog inputs should be short and shielded to prevent external capacitive crosstalk between channels. The capacitance between adjacent package pins is 0.16pF. Low source resistance and/or high source capacitance help reduce external capacitively coupled crosstalk. Single ended input drive also enjoys additional external crosstalk isolation because every other input pin is grounded, or at a low impedance DC source, and serves as a shield between channels.

INPUT OVERDRIVE TOLERANCE

Driving an analog input above V_{CC} on any channel up to 10mA will not affect conversion results on other channels. Approximately 70% of this overdrive current will flow out of the V_{CC} pin and the remaining 30% will flow out of V_{EE}. This current flowing out of V_{EE} will produce heat across the $V_{CC} - V_{EE}$ voltage drop and must be taken into account for the total Absolute Maximum power dissipation of 500mW. Driving an analog input below V_{EE} may corrupt conversion results on other channels. This product can handle input currents of up to 100mA below V_{EE} or above V_{CC} without latch-up.

Keep in mind that driving the inputs above V_{CC} or below V_{EE} may reverse the normal current flow from the external power supplies driving these pins.

APPLICATIONS INFORMATION

Input Filtering

The true high impedance analog inputs can accommodate a very wide range of passive or active signal conditioning filters. The buffered ADC inputs have an analog bandwidth of 6MHz, and impose no particular bandwidth requirement on external filters. The external input filters can therefore be optimized independent of the ADC to reduce signal chain noise and interference. A common filter configuration is the simple anti-aliasing and noise reducing RC filter with its pole at half the sampling frequency. For example, 100kHz with R=2.43kΩ and C=680pF as shown in Figure 5.

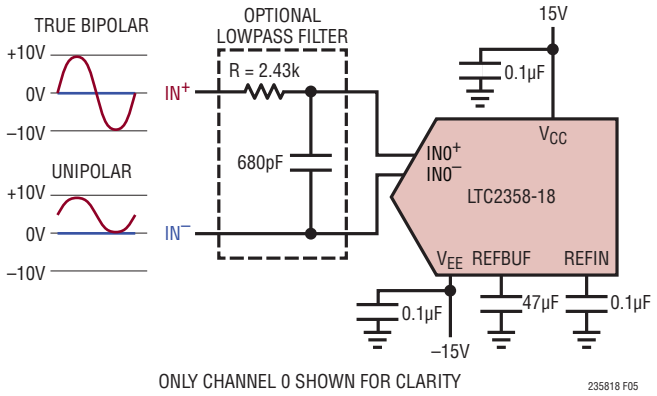

Figure 5. Filtering Single-Ended Input Signals

High quality capacitors and resistors should be used in the RC filters since these components can add distortion. NPO/COG and silver mica type dielectric capacitors have excellent linearity. Carbon surface mount resistors can generate distortion from self-heating and from damage that may occur during soldering. Metal film surface mount resistors are much less susceptible to both problems.

Arbitrary and Fully Differential Analog Input Signals

The wide common mode input range and high CMRR of the LTC2358-18 allow each channel's IN^+ and IN^- pins to swing with an arbitrary relationship to each other, provided each pin remains between (V_{CC} – 4V) and (V_{EE} + 4V). This feature of the LTC2358-18 enables it to accept a wide variety of signal swings, simplifying signal chain design.

The two-tone test shown in Figure 6b demonstrates the arbitrary input drive capability of the LTC2358-18. This test simultaneously drives IN^+ with a –7dBFS 2kHz single-ended sine wave and IN^- with a –7dBFS 3.1kHz single-ended sine wave. Together, these signals sweep the analog inputs across a wide range of common mode and differential mode voltage combinations, similar to the more general arbitrary input signal case. They also have a simple spectral representation. An ideal differential converter with no common-mode sensitivity will digitize this signal as two –7dBFS spectral tones, one at each sine wave frequency. The FFT plot in Figure 6b demonstrates the LTC2358-18 response approaches this ideal, with 119dB of SFDR limited by the converter's second harmonic distortion response to the 3.1kHz sine wave on IN^-.

The ability of the LTC2358-18 to accept arbitrary signal swings over a wide input common mode range with high CMRR can simplify application solutions. In practice, many sensors produce a differential sensor voltage riding on top of a large common mode signal. Figure 7a depicts one way of using the LTC2358-18 to digitize signals of this type. The amplifier stage provides a differential gain of approximately 10V/V to the desired sensor signal while the unwanted common mode signal is attenuated by the ADC CMRR. The circuit employs the ±5V SoftSpan range of the ADC. Figure 7b shows measured CMRR performance of this solution, which is competitive with the best commercially available instrumentation amplifiers. Figure 7c shows measured AC performance of this solution.

In Figure 8, another application circuit is shown which uses two channels of the LTC2358-18 to simultaneously sense the voltage and bidirectional current through a sense resistor over a wide common mode range.

APPLICATIONS INFORMATION

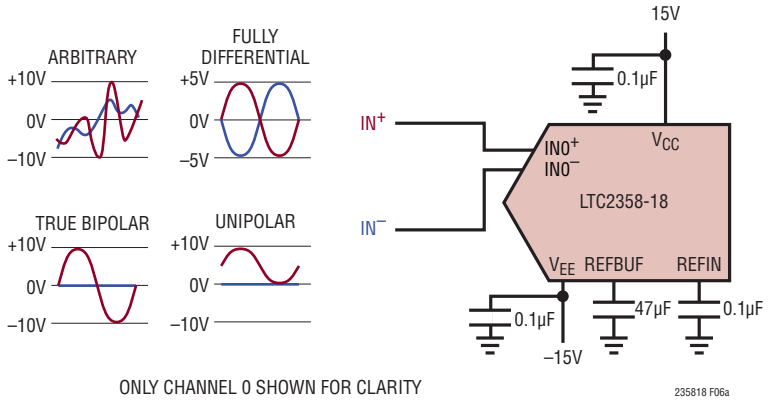

Figure 6a. Input Arbitrary, Fully Differential, True Bipolar, and Unipolar Signals

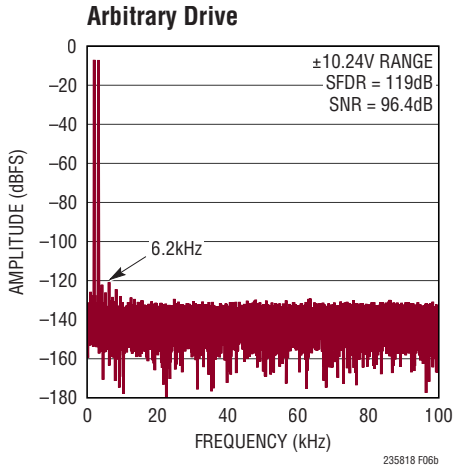

Figure 6b. Two-Tone Test. IN⁺ = –7dBFS 2kHz Sine, IN⁻ = –7dBFS 3.1kHz Sine, 32k Point FFT, f_{SMPL} = 200ksps. Circuit Shown in Figure 6a

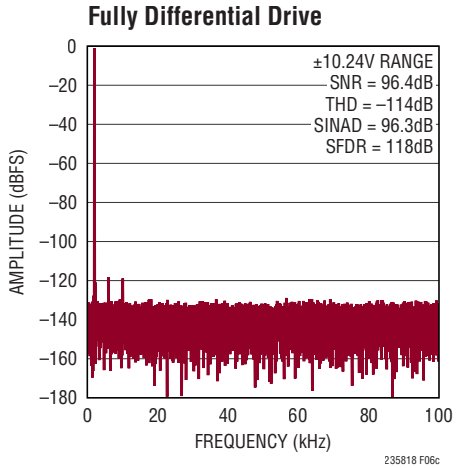

Figure 6c. IN⁺/IN⁻ = –1dBFS 2kHz Fully Differential Sine, V_{CM} = 0V, 32k Point FFT, f_{SMPL} = 200ksps. Circuit Shown in Figure 6a

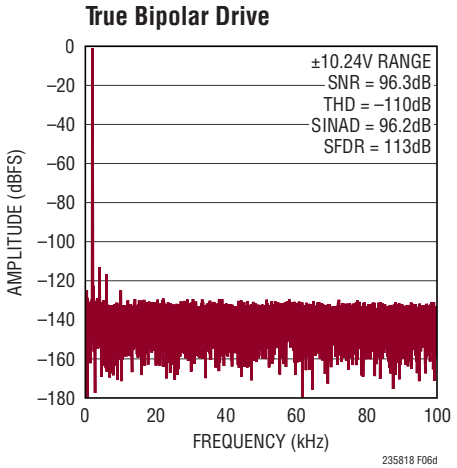

Figure 6d. IN⁺ = –1dBFS 2kHz True Bipolar Sine, IN⁻ = 0V, 32k Point FFT, f_{SMPL} = 200ksps. Circuit Shown in Figure 6a

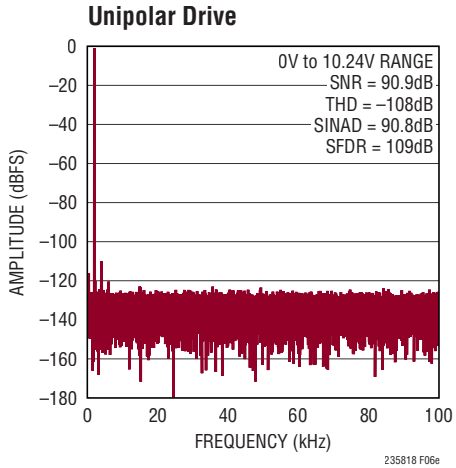

Figure 6e. IN⁺ = –1dBFS 2kHz Unipolar Sine, IN⁻ = 0V, 32k Point FFT, f_{SMPL} = 200ksps. Circuit Shown in Figure 6a

APPLICATIONS INFORMATION

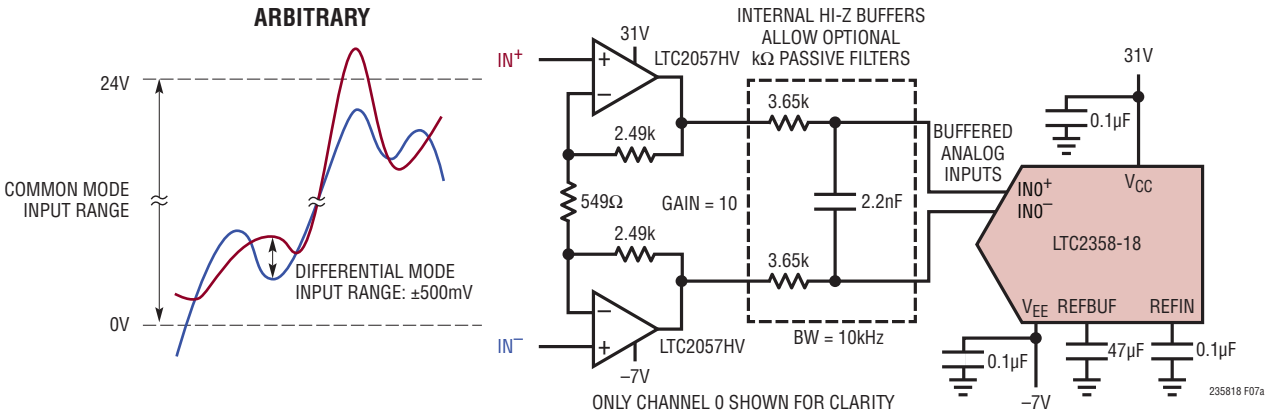

Figure 7a. Amplify Differential Signals with Gain of 10 Over a Wide Common Mode Range with Buffered Analog Inputs

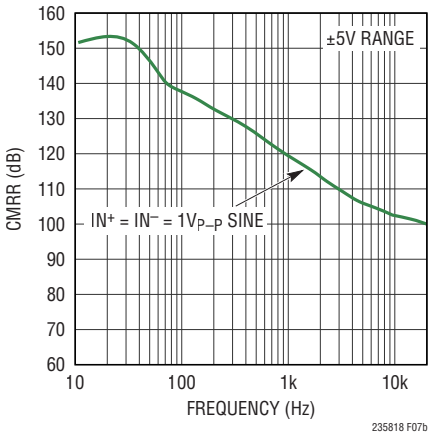

Figure 7b. CMRR vs Input Frequency. Circuit Shown in Figure 7a

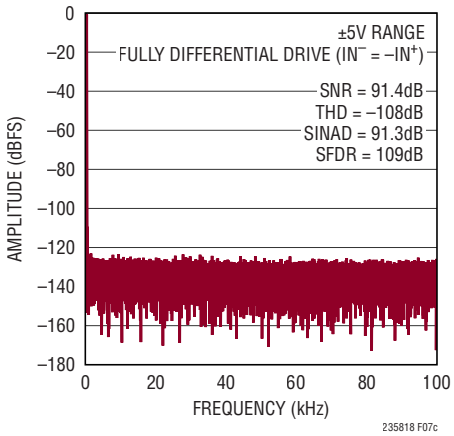

Figure 7c. IN^+/IN^- = 450mV 200Hz Fully Differential Sine, 0V ≤ V_{CM} ≤ 24V, 32k Point FFT, f_{SMPL} = 200ksps. Circuit Shown in Figure 7a

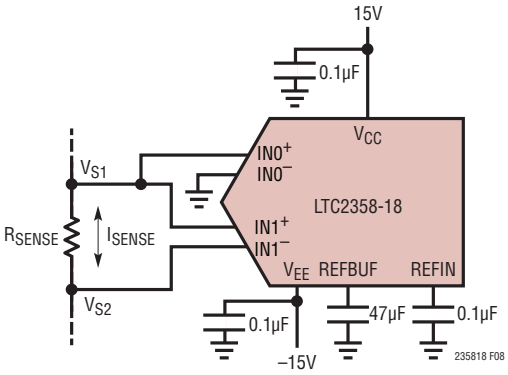

ONLY CHANNELS 0 AND 1 SHOWN FOR CLARITY

$$I_{SENSE} = \frac{V_{S1} - V_{S2}}{R_{SENSE}} \quad \begin{array}{l} -10.24V \le V_{S1} \le 10.24V \\ -10.24V \le V_{S2} \le 10.24V \end{array}$$

Figure 8. Simultaneously Sense Voltage (CH0) and Current (CH1) Over a Wide Common Mode Range

APPLICATIONS INFORMATION

ADC REFERENCE

As shown previously in Table 1b, the LTC2358-18 supports three reference configurations. The first uses both the internal bandgap reference and reference buffer. The second externally overdrives the internal reference but retains the internal buffer, which isolates the external reference from ADC conversion transients. This configuration is ideal for sharing a single precision external reference across multiple ADCs. The third disables the internal buffer and overdrives the REFBUF pin externally.

Internal Reference with Internal Buffer

The LTC2358-18 has an on-chip, low noise, low drift (20ppm/°C maximum), temperature compensated bandgap reference that is factory trimmed to 2.048V. The reference output connects through a 20kΩ resistor to the REFIN pin, which serves as the input to the on-chip reference buffer, as shown in Figure 9a. When employing the internal bandgap reference, the REFIN pin should be bypassed to GND (Pin 20) close to the pin with a 0.1µF ceramic capacitor to filter wideband noise. The reference buffer amplifies V_{REFIN} to create the converter master reference voltage $V_{REFBUF} = 2 \bullet V_{REFIN}$ on the REFBUF pin, nominally 4.096V when using the internal bandgap reference. Bypass REFBUF to GND (Pin 20) close to the pin with at least a 47µF ceramic capacitor (X7R, 10V, 1210 size or X5R, 10V, 0805 size) to compensate the reference buffer, absorb transient conversion currents, and minimize noise.

External Reference with Internal Buffer

If more accuracy and/or lower drift is desired, REFIN can be easily overdriven by an external reference since 20kΩ of resistance separates the internal bandgap reference output from the REFIN pin, as shown in Figure 9b. The valid range of external reference voltage overdrive on the REFIN pin is 1.25V to 2.2V, resulting in converter master reference voltages V_{REFBUF} between 2.5V and 4.4V, respectively. Linear Technology offers a portfolio of high performance references designed to meet the needs of many applications. With its small size, low power, and high accuracy, the LTC6655-2.048 is well suited for use with the LTC2358-18 when overdriving the internal reference. The

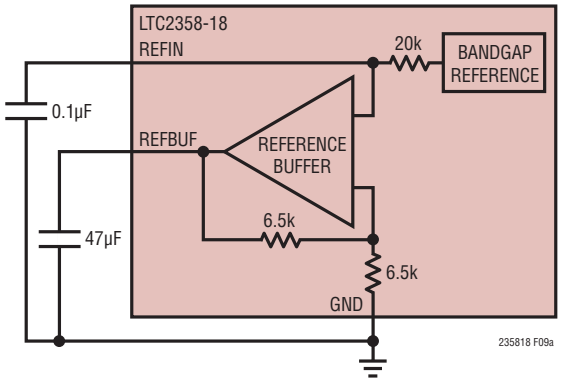

Figure 9a. Internal Reference with Internal Buffer Configuration

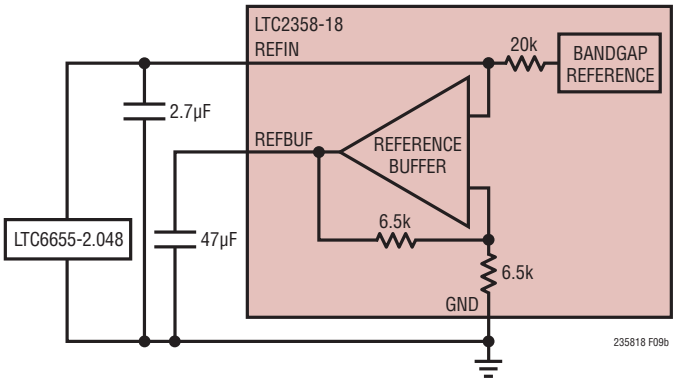

Figure 9b. External Reference with Internal Buffer Configuration

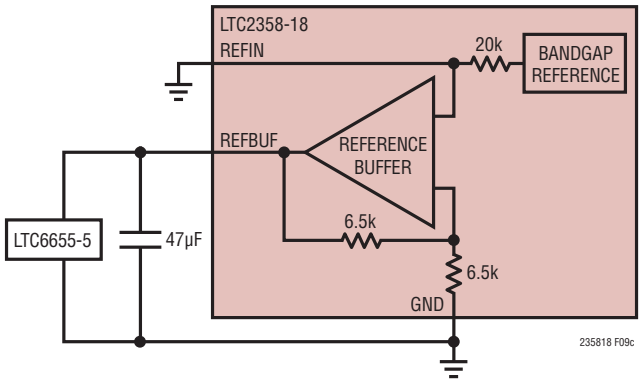

Figure 9c. External Reference with Disabled Internal Buffer Configuration

APPLICATIONS INFORMATION

LTC6655-2.048 offers 0.025% (maximum) initial accuracy and 2ppm/°C (maximum) temperature coefficient for high precision applications. The LTC6655-2.048 is fully specified over the H-grade temperature range, complementing the extended temperature range of the LTC2358-18 up to 125°C. Bypassing the LTC6655-2.048 with a 2.7µF to 100µF ceramic capacitor close to the REFIN pin is recommended.

External Reference with Disabled Internal Buffer

The internal reference buffer supports V_{REFBUF} = 4.4V maximum. By grounding REFIN, the internal buffer may be disabled allowing REFBUF to be overdriven with an external reference voltage between 2.5V and 5V, as shown in Figure 9c. Maximum input signal swing and SNR are achieved by overdriving REFBUF using an external 5V reference. The buffer feedback resistors load the REFBUF pin with 13kΩ even when the reference buffer is disabled. The LTC6655-5 offers the same small size, accuracy, drift, and extended temperature range as the LTC6655-2.048, and achieves a typical SNR of 97.9dB when paired with the LTC2358-18. Bypass the LTC6655-5 to GND (Pin 20) close to the REFBUF pin with at least a 47µF ceramic capacitor (X7R, 10V, 1210 size or X5R, 10V, 0805 size) to absorb transient conversion currents and minimize noise.

The LTC2358-18 converter draws a charge (Q_{CONV}) from the REFBUF pin during each conversion cycle. On short time scales most of this charge is supplied by the external REFBUF bypass capacitor, but on longer time scales all of the charge is supplied by either the reference buffer, or when the internal reference buffer is disabled, the external reference. This charge draw corresponds to a DC current equivalent of $I_{REFBUF} = Q_{CONV} \bullet f_{SMPL}$, which is proportional to sample rate. In applications where a burst of samples is taken after idling for long periods of time, as shown in Figure 10, I_{REFBUF} quickly transitions from approximately 0.4mA to 1.5mA (V_{REFBUF} = 5V, f_{SMPL} = 200kHz). This current step triggers a transient response in the external reference that must be considered, since any deviation in V_{REFBUF} affects converter accuracy. If an external reference is used to overdrive REFBUF, the fast settling LTC6655 family of references is recommended.

Internal Reference Buffer Transient Response

For optimum performance in applications employing burst sampling, the external reference with internal reference buffer configuration should be used. The internal reference buffer incorporates a proprietary design that minimizes movements in V_{REFBUF} when responding to a burst of conversions following an idle period. Figure 11 compares the burst conversion response of the LTC2358-18 with an input near full scale for two reference configurations. The first configuration employs the internal reference buffer with REFIN externally overdriven by an LTC6655-2.048, while the second configuration disables the internal reference buffer and overdrives REFBUF with an external LTC6655-4.096. In both cases REFBUF is bypassed to GND with a 47µF ceramic capacitor.

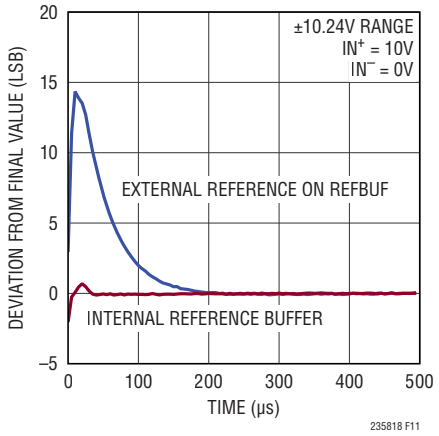

Figure 11. Burst Conversion Response of the LTC2358-18, f_{SMPL} = 200ksps

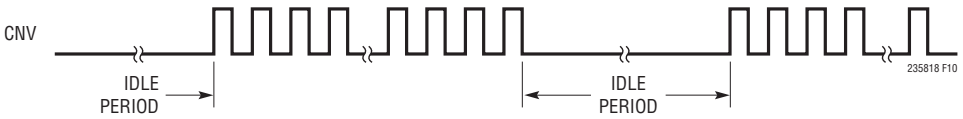

Figure 10. CNV Waveform Showing Burst Sampling

APPLICATIONS INFORMATION

DYNAMIC PERFORMANCE

Fast Fourier transform (FFT) techniques are used to test the ADC's frequency response, distortion, and noise at the rated throughput. By applying a low distortion sine wave and analyzing the digital output using an FFT algorithm, the ADC's spectral content can be examined for frequencies outside the fundamental. The LTC2358-18 provides guaranteed tested limits for both AC distortion and noise measurements.

Signal-to-Noise and Distortion Ratio (SINAD)

The signal-to-noise and distortion ratio (SINAD) is the ratio between the RMS amplitude of the fundamental input frequency and the RMS amplitude of all other frequency components at the A/D output. The output is band-limited to frequencies below half the sampling frequency, excluding DC. Figure 12 shows that the LTC2358-18 achieves a typical SINAD of 96.2dB in the ±10.24V range at a 200kHz sampling rate with a true bipolar 2kHz input signal.

Signal-to-Noise Ratio (SNR)

The signal-to-noise ratio (SNR) is the ratio between the RMS amplitude of the fundamental input frequency and the RMS amplitude of all other frequency components except the first five harmonics and DC. Figure 12 shows that the LTC2358-18 achieves a typical SNR of 96.4dB in the ±10.24V range at a 200kHz sampling rate with a true bipolar 2kHz input signal.

Total Harmonic Distortion (THD)

Total harmonic distortion (THD) is the ratio of the RMS sum of all harmonics of the input signal to the fundamental itself. The out-of-band harmonics alias into the frequency band between DC and half the sampling frequency ($f_{SMPL}/2$). THD is expressed as:

$$THD = 20\log\frac{\sqrt{V_2^2 + V_3^2 + V_4^2 \ldots V_N^2}}{V_1}$$

where V_1 is the RMS amplitude of the fundamental frequency and V_2 through V_N are the amplitudes of the second through Nth harmonics, respectively. Figure 12 shows that the LTC2358-18 achieves a typical THD of –111dB (N = 6) in the ±10.24V range at a 200kHz sampling rate with a true bipolar 2kHz input signal.

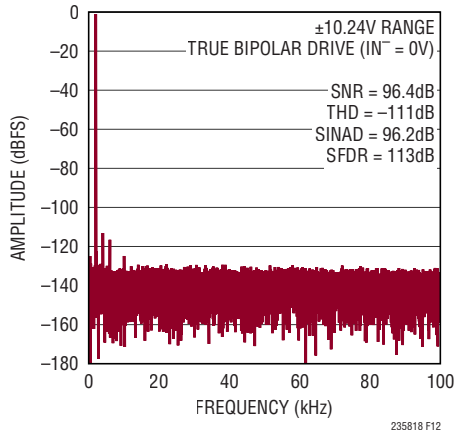

Figure 12. 32k Point FFT f_{SMPL} = 200ksps, f_{IN} = 2kHz

POWER CONSIDERATIONS

The LTC2358-18 requires four power supplies: the positive and negative high voltage power supplies (V_{CC} and V_{EE}), the 5V core power supply (V_{DD}) and the digital input/output (I/O) interface power supply (OV_{DD}). As long as the voltage difference limits of $10V \le V_{CC} - V_{EE} \le 38V$ are observed, V_{CC} and V_{EE} may be independently biased anywhere within their own individual allowed operating ranges, including the ability for V_{EE} to be tied directly to ground. This feature enables the common mode input range of the LTC2358-18 to be tailored to the specific application's requirements. The flexible OV_{DD} supply allows the LTC2358-18 to communicate with CMOS logic operating between 1.8V and 5V, including 2.5V and 3.3V systems. When using LVDS I/O mode, the range of OV_{DD} is 2.375V to 5.25V.

Power Supply Sequencing

The LTC2358-18 does not have any specific power supply sequencing requirements. Care should be taken to adhere to the maximum voltage relationships described in the Absolute Maximum Ratings section. The LTC2358-18 has an internal power-on-reset (POR) circuit which resets the

APPLICATIONS INFORMATION

converter on initial power-up and whenever V_{DD} drops below 2V. Once the supply voltage re-enters the nominal supply voltage range, the POR reinitializes the ADC. No conversions should be initiated until at least 10ms after a POR event to ensure the initialization period has ended. When employing the internal reference buffer, allow 200ms for the buffer to power up and recharge the REFBUF bypass capacitor. Any conversion initiated before these times will produce invalid results.

TIMING AND CONTROL

CNV Timing

The LTC2358-18 sampling and conversion is controlled by CNV. A rising edge on CNV transitions all channels' S/H circuits from track mode to hold mode, simultaneously sampling the input signals on all channels and initiating a conversion. Once a conversion has been started, it cannot be terminated early except by resetting the ADC, as discussed in the Reset Timing section. For optimum performance, drive CNV with a clean, low jitter signal and avoid transitions on data I/O lines leading up to the rising edge of CNV. Additionally, to minimize channel-to-channel crosstalk, avoid high slew rates on the analog inputs for 100ns before and after the rising edge of CNV. Converter status is indicated by the BUSY output, which transitions low-to-high at the start of each conversion and stays high until the conversion is complete. Once CNV is brought high to begin a conversion, it should be returned low between 40ns and 60ns later or after the falling edge of BUSY to minimize external disturbances during the internal conversion process. The CNV timing required to take advantage of the reduced power nap mode of operation is described in the Nap Mode section.

Internal Conversion Clock

The LTC2358-18 has an internal clock that is trimmed to achieve a maximum conversion time of 550•N ns with N channels enabled. With a minimum acquisition time of 570ns when converting eight channels simultaneously, throughput performance of 200ksps is guaranteed without any external adjustments. Also note that the minimum acquisition time varies with sampling frequency (f_{SMPL}) and the number of enabled channels.

Nap Mode

The LTC2358-18 can be placed into nap mode after a conversion has been completed to reduce power consumption between conversions. In this mode a portion of the device circuitry is turned off, including circuits associated with sampling the analog input signals. Nap mode is enabled by keeping CNV high between conversions, as shown in Figure 13. To initiate a new conversion after entering nap mode, bring CNV low and hold for at least 750ns before bringing it high again. The converter acquisition time (t_{ACQ}) is set by the CNV low time (t_{CNVL}) when using nap mode.

Power Down Mode

When PD is brought high, the LTC2358-18 is powered down and subsequent conversion requests are ignored. If this occurs during a conversion, the device powers down once the conversion completes. In this mode, the device

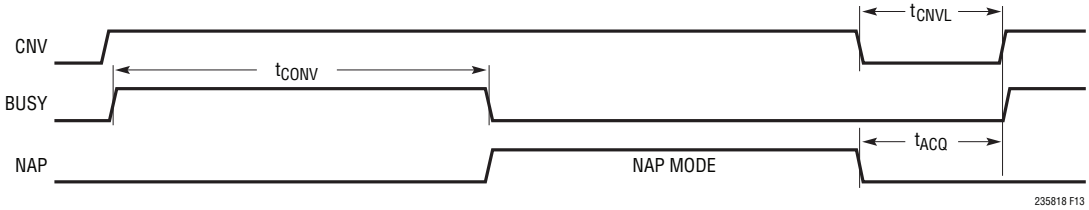

Figure 13. Nap Mode Timing for the LTC2358-18

APPLICATIONS INFORMATION

draws only a small regulator standby current resulting in a typical power dissipation of 0.68mW. To exit power down mode, bring the PD pin low and wait at least 10ms before initiating a conversion. When employing the internal reference buffer, allow 200ms for the buffer to power up and recharge the REFBUF bypass capacitor. Any conversion initiated before these times will produce invalid results.

Reset Timing

A global reset of the LTC2358-18, equivalent to a power-on-reset event, may be executed without needing to cycle the supplies. This feature is useful when recovering from system-level events that require the state of the entire system to be reset to a known synchronized value. To initiate a global reset, bring PD high twice without an intervening conversion, as shown in Figure 14. The reset event is triggered on the second rising edge of PD, and asynchronously ends based on an internal timer. Reset clears all serial data output registers and restores the internal SoftSpan configuration register default state of all channels in SoftSpan 7. If reset is triggered during a conversion, the conversion is immediately halted. The normal power down behavior associated with PD going high is not affected by reset. Once PD is brought low, wait at least 10ms before initiating a conversion. When employing the internal reference buffer, allow 200ms for the buffer to power up and recharge the REFBUF bypass capacitor. Any conversion initiated before these times will produce invalid results.

Power Dissipation vs Sampling Frequency

When nap mode is employed, the power dissipation of the LTC2358-18 decreases as the sampling frequency is reduced, as shown in Figure 15. This decrease in average power dissipation occurs because a portion of the LTC2358-18 circuitry is turned off during nap mode, and the fraction of the conversion cycle (t_{CYC}) spent napping increases as the sampling frequency (f_{SMPL}) is decreased.

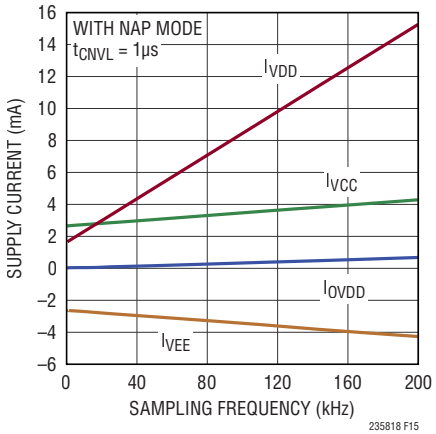

Figure 15. Power Dissipation of the LTC2358-18 Decreases with Decreasing Sampling Frequency

DIGITAL INTERFACE

The LTC2358-18 features CMOS and LVDS serial interfaces, selectable using the LVDS/$\overline{CMOS}$ pin. The flexible OV_{DD} supply allows the LTC2358-18 to communicate with any CMOS logic operating between 1.8V and 5V, including 2.5V and 3.3V systems, while the LVDS interface supports low noise digital designs. In CMOS mode, applications may employ between one and eight lanes of serial data output, allowing the user to optimize bus width and data throughput. Together, these I/O interface options enable the LTC2358-18 to communicate equally well with legacy microcontrollers and modern FPGAs.

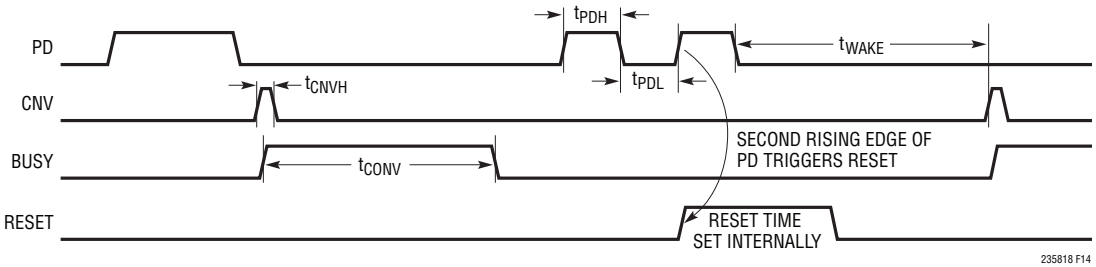

Figure 14. Reset Timing for the LTC2358-18

APPLICATIONS INFORMATION

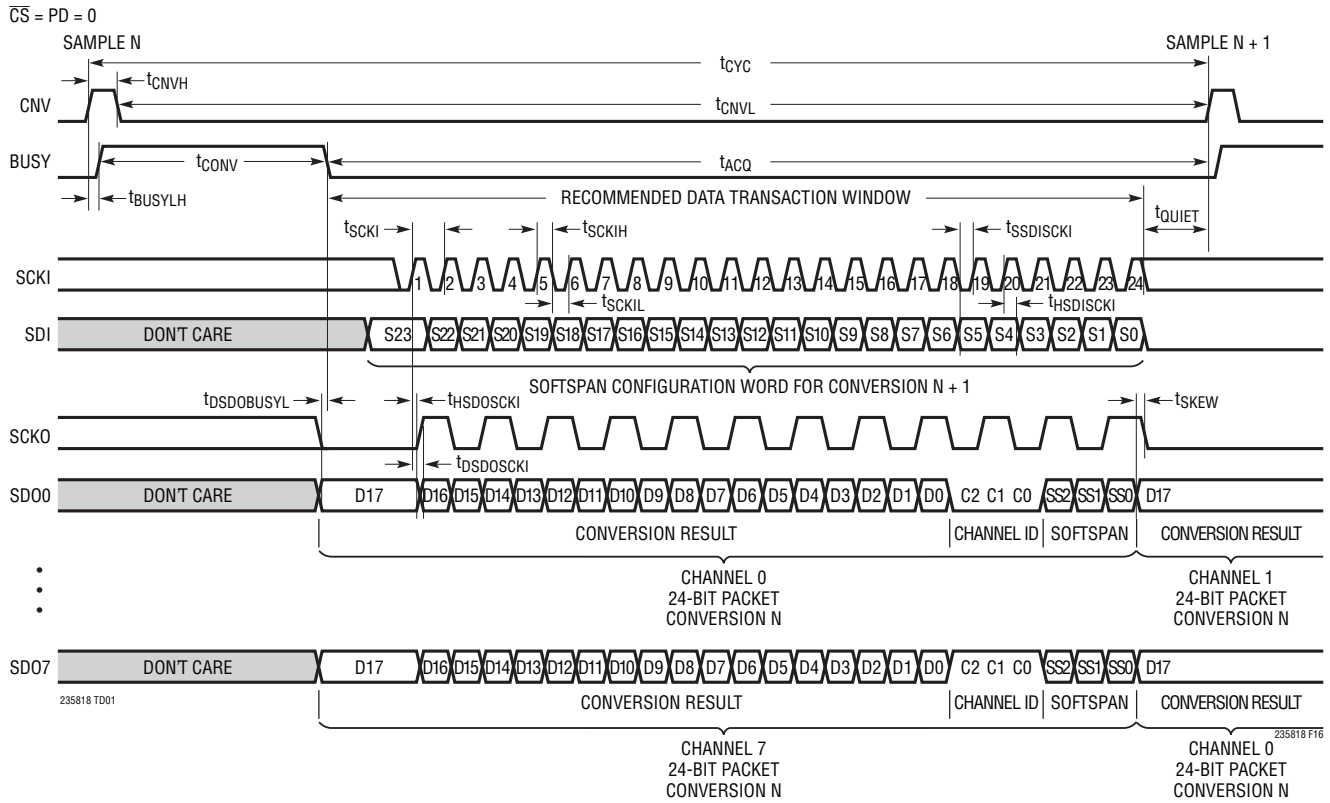

Figure 16. Serial CMOS I/O Mode

Serial CMOS I/O Mode

As shown in Figure 16, in CMOS I/O mode the serial data bus consists of a serial clock input, SCKI, serial data input, SDI, serial clock output, SCKO, and eight lanes of serial data output, SDO0 to SDO7. Communication with the LTC2358-18 across this bus occurs during predefined data transaction windows. Within a window, the device accepts 24-bit SoftSpan configuration words for the next conversion on SDI and outputs 24-bit packets containing conversion results and channel configuration information from the previous conversion on SDO0 to SDO7. New data transaction windows open 10ms after powering up or resetting the LTC2358-18, and at the end of each conversion on the falling edge of BUSY. In the recommended use case, the data transaction should be completed with a minimum t_{QUIET} time of 20ns prior to the start of the next conversion, as shown in Figure 16. New SoftSpan configuration words are only accepted within this recommended data transaction window, but SoftSpan changes take effect immediately with no additional analog input settling time required before starting the next conversion. It is still possible to read conversion data after starting the next conversion, but this will degrade conversion accuracy and therefore is not recommended.

Just prior to the falling edge of BUSY and the opening of a new data transaction window, SCKO is forced low and SDO0 to SDO7 are updated with the latest conversion results from analog input channels 0 to 7, respectively. Rising edges on SCKI serially clock conversion results and analog input channel configuration information out on SDO0 to SDO7 and trigger transitions on SCKO that are skew-matched to the data on SDO0 to SDO7. The resulting SCKO frequency is half that of SCKI. SCKI rising edges also latch SoftSpan configuration words provided on SDI,

APPLICATIONS INFORMATION

which are used to program the internal 24-bit SoftSpan configuration register. See the section Programming the SoftSpan Configuration Register in CMOS I/O Mode for further details. SCKI is allowed to idle either high or low in CMOS I/O mode. As shown in Figure 17, the CMOS bus is enabled when $\overline{CS}$ is low and is disabled and Hi-Z when $\overline{CS}$ is high, allowing the bus to be shared across multiple devices.

The data on SDO0 to SDO7 are grouped into 24-bit packets consisting of an 18-bit conversion result, 3-bit analog channel ID, and 3-bit SoftSpan code, all presented MSB first. As suggested in Figures 16 and 17, each SDO lane outputs these packets for all analog input channels in a sequential, circular manner. For example, the first 24-bit packet output on SDO0 corresponds to analog input channel 0, followed by the packets for channels 1 through 7. The data output on SDO0 then wraps back to channel 0, and this pattern repeats indefinitely. Other SDO lanes follow a similar circular pattern, except the first packet presented on each lane corresponds to its associated analog input channel.

When interfacing the LTC2358-18 with a standard SPI bus, capture output data at the receiver on rising edges of SCKI. SCKO is not used in this case. Multiple SDO lanes are also usually not useful in this case. In other applications, such as interfacing the LTC2358-18 with an FPGA or CPLD, rising and falling edges of SCKO may be used to capture serial output data on SDO0 to SDO7 in double data rate (DDR) fashion. Capturing data using SCKO adds robustness to delay variations over temperature and supply.

Full Eight Lane Serial CMOS Output Data Capture

As shown in Table 2, full 200ksps per channel throughput can be achieved with a 45MHz SCKI frequency by capturing the first packet (24 SCKI cycles total) from all eight serial data output lanes SDO0 to SDO7. This configuration also allows conversion results from all channels to be captured using as few as 18 SCKI cycles if the 3-bit analog channel ID and 3-bit SoftSpan code are not needed and the device SoftSpan configuration is not being changed. Multi-lane data capture is usually best suited for use with FPGA or CPLD capture hardware, but may be useful in other application-specific cases.

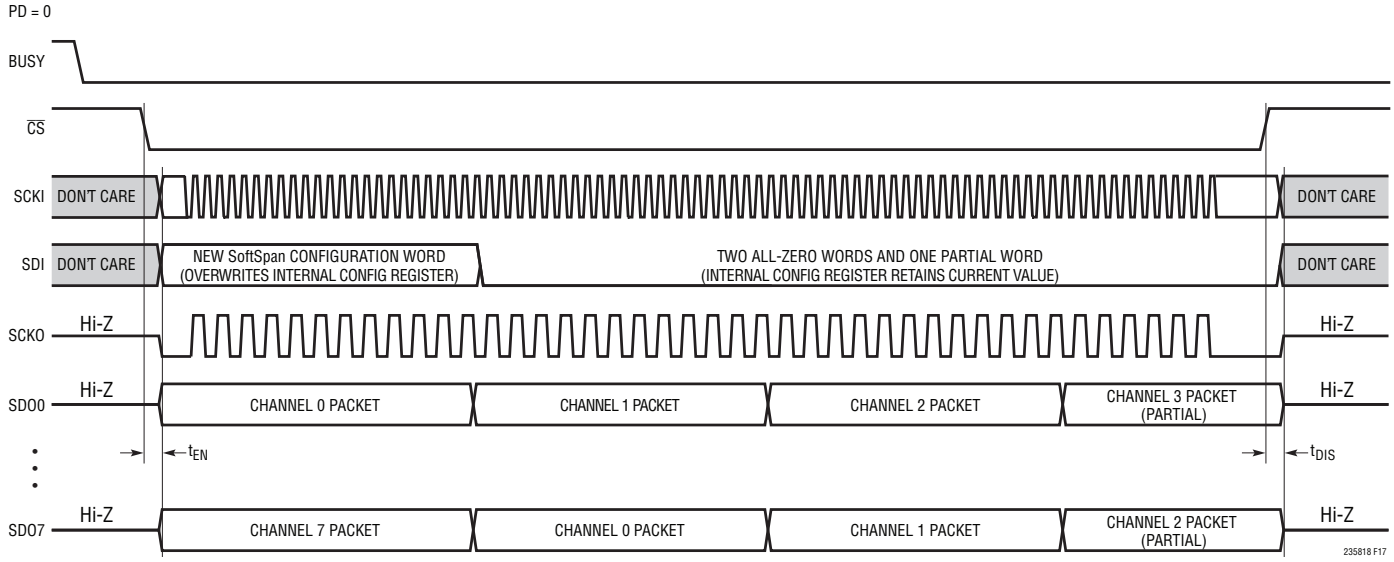

Figure 17. Internal SoftSpan Configuration Register Behavior. Serial CMOS Bus Response to $\overline{CS}$

APPLICATIONS INFORMATION

Fewer Than Eight Lane Serial CMOS Output Data Capture

Applications that cannot accommodate the full eight lanes of serial data capture may employ fewer lanes without reconfiguring the LTC2358-18. For example, capturing the first two packets (48 SCKI cycles total) from SDO0, SDO2, SDO4, and SDO6 provides data for analog input channels 0 and 1, 2 and 3, 4 and 5, and 6 and 7, respectively, using four output lanes. Similarly, capturing the first four packets (96 SCKI cycles total) from SDO0 and SDO4 provides data for analog input channels 0 to 3 and 4 to 7, respectively, using two output lanes. If only one lane can be accommodated, capturing the first eight packets (192 SCKI cycles total) from SDO0 provides data for all analog input channels. As shown in Table 2, full 200ksps per channel throughput can be achieved with a 90MHz SCKI frequency in the four lane case, but the maximum CMOS SCKI frequency of 100MHz limits the throughput to less than 200ksps per channel in the two lane and one lane cases. Finally, note that in choosing the number of lanes and which lanes to use for data capture, the user is not restricted to the specific cases mentioned above. Other choices may be more optimal in particular applications.

Programming the SoftSpan Configuration Register in CMOS I/O Mode

The internal 24-bit SoftSpan configuration register controls the SoftSpan range for all analog input channels of the LTC2358-18. The default state of this register after power-up or resetting the device is all ones, configuring each channel to convert in SoftSpan 7, the $\pm 2.5 \bullet V_{REFBUF}$ range (see Table 1a). The state of this register may be modified by providing a new 24-bit SoftSpan configuration word on SDI during the data transaction window shown in Figure 16. New SoftSpan configuration words are only accepted within this recommended data transaction window, but SoftSpan changes take effect immediately with no additional analog input settling time required before starting the next conversion. Setting a channel's SoftSpan code to SS[2:0] = 000 immediately disables the channel, resulting in a corresponding reduction in t_{CONV} on the next conversion. Similarly, enabling a previously disabled channel requires no additional analog input settling time before starting the next conversion. The mapping between the serial SoftSpan configuration word, the internal SoftSpan configuration register, and each channel's 3-bit SoftSpan code is illustrated in Figure 18.

Table 2. Required SCKI Frequency to Achieve Various Throughputs in Common Output Bus Configurations with Eight Channels Enabled. Shaded Entries Denote Throughputs That Are Not Achievable in a Given Configuration. Calculated Using f_{SCKI} = (Number of SCKI Cycles)/($t_{ACQ(MIN)} - t_{QUIET}$)

I/O MODE	NUMBER OF SDO LANES	NUMBER OF SCKI CYCLES	REQUIRED f_{SCKI} (MHz) TO ACHIEVE THROUGHPUT OF 200ksps/CHANNEL (t_{ACQ} = 570ns)	100ksps/CHANNEL (t_{ACQ} = 5570ns)	50ksps/CHANNEL (t_{ACQ} = 15570ns)
CMOS	8	18	35	4	2
	8	24	45	5	2
	4	48	90	9	4
	2	96	Not Achievable	18	7
	1	192	Not Achievable	35	13
LVDS	1	96	180 (360Mbps)	18 (36Mbps)	7 (14Mbps)

APPLICATIONS INFORMATION

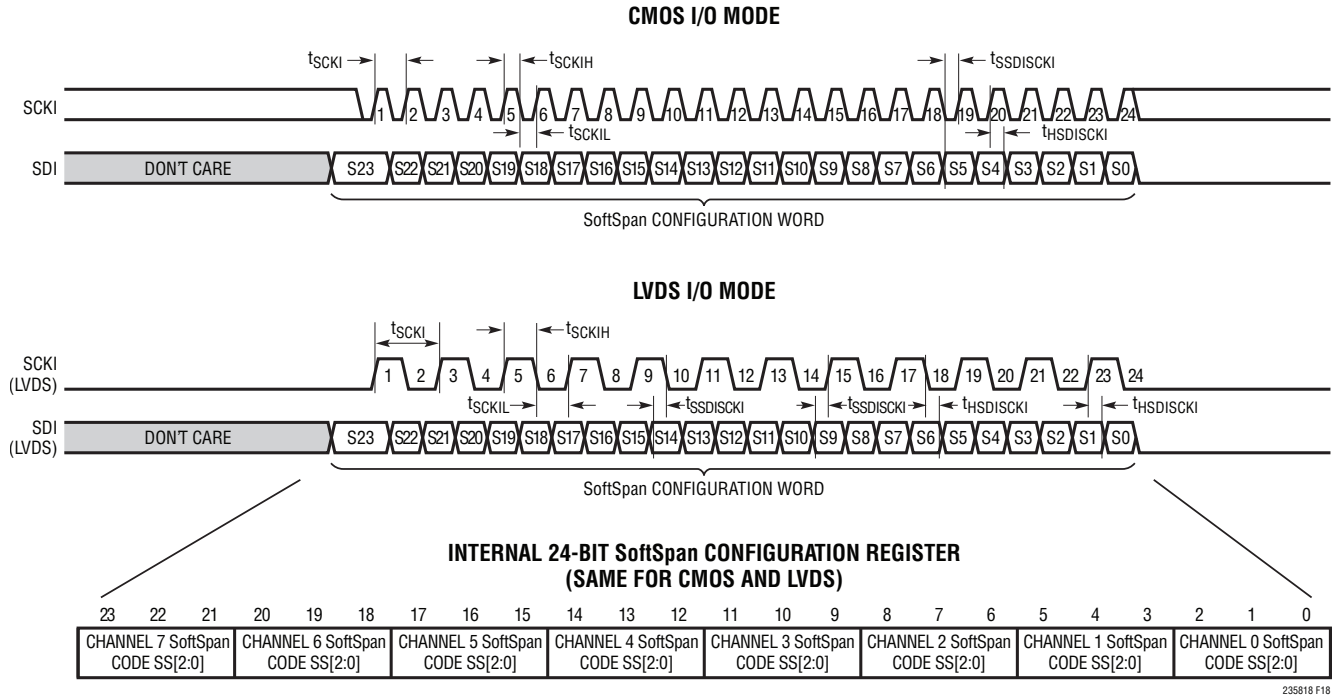

Figure 18. Mapping Between Serial SoftSpan Configuration Word, Internal SoftSpan Configuration Register, and SoftSpan Code for Each Analog Input Channel

If fewer than 24 SCKI rising edges are provided during a data transaction window, the partial word received on SDI will be ignored and the SoftSpan configuration register will not be updated. If exactly 24 SCKI rising edges are provided, the SoftSpan configuration register will be updated to match the received SoftSpan configuration word, S[23:0]. The one exception to this behavior occurs when S[23:0] is all zeros. In this case, the SoftSpan configuration register will not be updated, allowing applications to retain the current SoftSpan configuration state by idling SDI low. If more than 24 SCKI rising edges are provided during a data transaction window, each complete 24-bit word received on SDI will be interpreted as a new SoftSpan configuration word and applied to the SoftSpan configuration register as described above. Any partial words are ignored.

Typically, applications will update the SoftSpan configuration register in the manner shown in Figures 16 and 17. After the opening of a new data transaction window at the falling edge of BUSY, the user supplies a 24-bit SoftSpan configuration word on SDI during the first 24 SCKI cycles. This new word overwrites the internal configuration register contents following the 24th SCKI rising edge. The user then holds SDI low for the remainder of the data transaction window causing the register to retain its contents regardless of the number of additional SCKI cycles applied. SoftSpan settings may be retained across multiple conversions by holding SDI low for the entire data transaction window, regardless of the number of SCKI cycles applied.

Serial LVDS I/O Mode

In LVDS I/O mode, information is transmitted using positive and negative signal pairs ($LVDS^+/LVDS^-$) with bits differentially encoded as ($LVDS^+ – LVDS^-$). These signals are typically routed using differential transmission lines

APPLICATIONS INFORMATION

with 100Ω characteristic impedance. Logical 1's and 0's are nominally represented by differential +350mV and –350mV, respectively. For clarity, all LVDS timing diagrams and interface discussions adopt the logical rather than physical convention.

As shown in Figure 19, in LVDS I/O mode the serial data bus consists of a serial clock differential input, SCKI, serial data differential input, SDI, serial clock differential output, SCKO, and serial data differential output, SDO. Communication with the LTC2358-18 across this bus occurs during predefined data transaction windows. Within a window, the device accepts 24-bit SoftSpan configuration words for the next conversion on SDI and outputs 24-bit packets containing conversion results and channel configuration information from the previous conversion on SDO. New data transaction windows open 10ms after powering up or resetting the LTC2358-18, and at the end of each conversion on the falling edge of BUSY. In the recommended use case, the data transaction should be completed with a minimum t_{QUIET} time of 20ns prior to the start of the next conversion, as shown in Figure 19. New SoftSpan configuration words are only accepted within this recommended data transaction window, but SoftSpan changes take effect immediately with no additional analog input settling time required before starting the next conversion. It is still possible to read conversion data after starting the next conversion, but this will degrade conversion accuracy and therefore is not recommended.

Just prior to the falling edge of BUSY and the opening of a new data transaction window, SDO is updated with the latest conversion results from analog input channel 0. Both rising and falling edges on SCKI serially clock conversion results and analog input channel configuration information out on SDO. SCKI is also echoed on SCKO, skew-matched to the data on SDO. Whenever possible, it is recommended that rising and falling edges of SCKO be used to capture DDR serial output data on SDO, as this will yield the best robustness to delay variations over supply and temperature. SCKI rising and falling edges also latch SoftSpan configuration words provided on SDI, which are used to

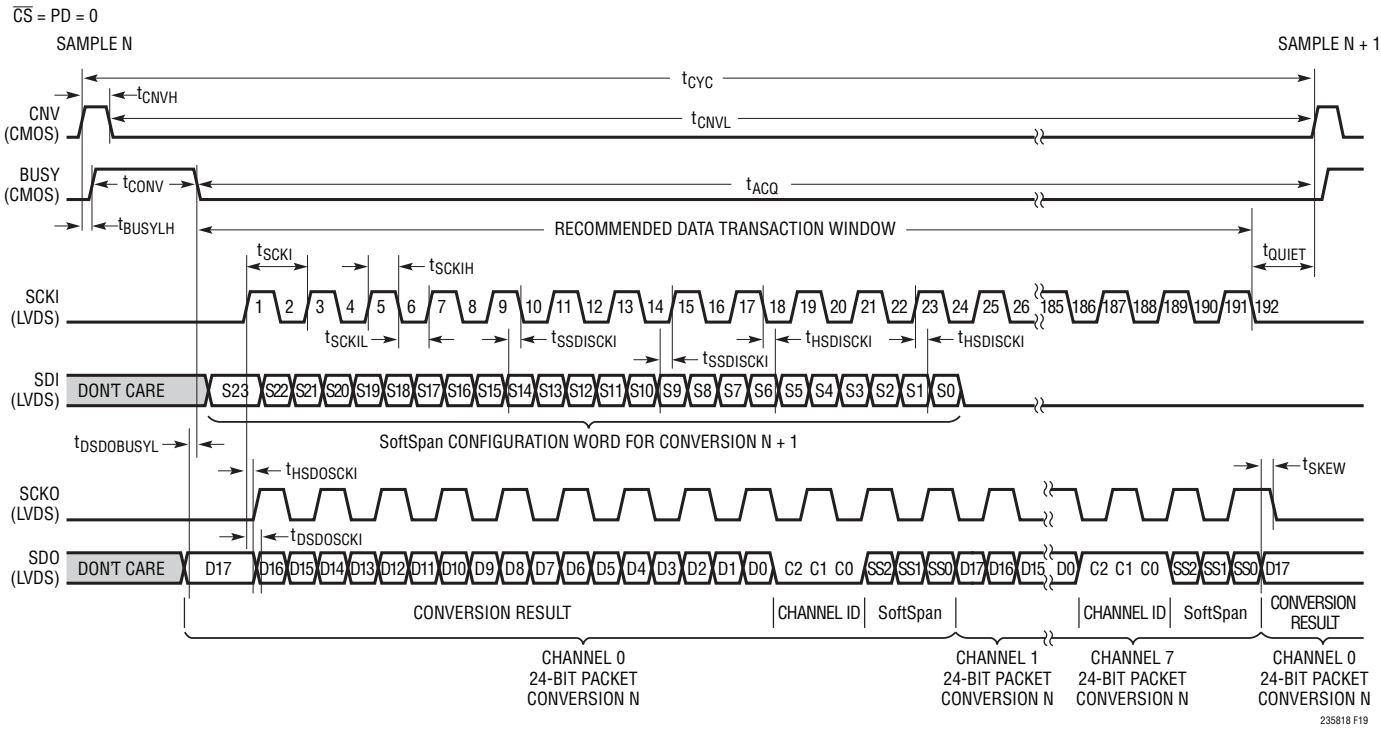

Figure 19. Serial LVDS I/O Mode

APPLICATIONS INFORMATION

program the internal 24-bit SoftSpan configuration register. See the section Programming the SoftSpan Configuration Register in LVDS I/O Mode for further details. As shown in Figure 20, the LVDS bus is enabled when $\overline{CS}$ is low and is disabled and Hi-Z when $\overline{CS}$ is high, allowing the bus to be shared across multiple devices. Due to the high speeds involved in LVDS signaling, LVDS bus sharing must be carefully considered. Transmission line limitations imposed by the shared bus may limit the maximum achievable bus clock speed. LVDS inputs are internally terminated with a 100Ω differential resistor when $\overline{CS}$ is low, while outputs must be differentially terminated with a 100Ω resistor at the receiver (FPGA). SCKI must idle in the low state in LVDS I/O mode, including when transitioning $\overline{CS}$.

The data on SDO are grouped into 24-bit packets consisting of an 18-bit conversion result, 3-bit analog channel ID, and 3-bit SoftSpan code, all presented MSB first. As suggested in Figures 19 and 20, SDO outputs these packets for all analog input channels in a sequential, circular manner. For example, the first 24-bit packet output on SDO corresponds to analog input channel 0, followed by the packets for channels 1 through 7. The data output on SDO then wraps back to channel 0, and this pattern repeats indefinitely.

Serial LVDS Output Data Capture

As shown in Table 2, full 200ksps per channel throughput can be achieved with a 180MHz SCKI frequency by capturing eight packets (96 SCKI cycles total) of DDR data from SDO. The LTC2358-18 supports LVDS SCKI frequencies up to 250MHz.

Programming the SoftSpan Configuration Register in LVDS I/O Mode

The internal 24-bit SoftSpan configuration register controls the SoftSpan range for all analog input channels of the LTC2358-18. The default state of this register after power-up or resetting the device is all ones, configuring each channel to convert in SoftSpan 7, the $\pm 2.5 \bullet V_{REFBUF}$ range (see Table 1a). The state of this register may be modified by providing a new 24-bit SoftSpan configuration word on SDI during the data transaction window shown in Figure 19. New SoftSpan configuration words are only accepted within this recommended data transaction window, but SoftSpan changes take effect immediately with no additional analog input settling time required before starting the next conversion. Setting a channel's SoftSpan code to SS[2:0] = 000 immediately disables the channel, resulting in a corresponding reduction in t_{CONV} on the next

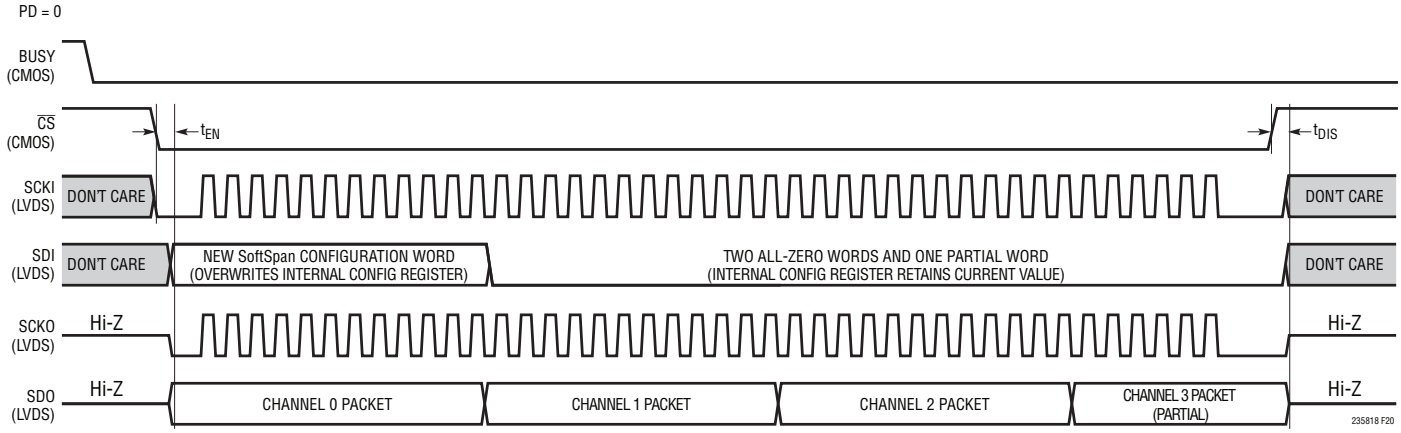

Figure 20. Internal SoftSpan Configuration Register Behavior. Serial LVDS Bus Response to $\overline{CS}$

APPLICATIONS INFORMATION

conversion. Similarly, enabling a previously disabled channel requires no additional analog input settling time before starting the next conversion. The mapping between the serial SoftSpan configuration word, the internal SoftSpan configuration register, and each channel's 3-bit SoftSpan code is illustrated in Figure 18.

If fewer than 24 SCKI edges (rising plus falling) are provided during a data transaction window, the partial word received on SDI will be ignored and the SoftSpan configuration register will not be updated. If exactly 24 SCKI edges are provided, the SoftSpan configuration register will be updated to match the received SoftSpan configuration word, S[23:0]. The one exception to this behavior occurs when S[23:0] is all zeros. In this case, the SoftSpan configuration register will not be updated, allowing applications to retain the current SoftSpan configuration state by idling SDI low. If more than 24 SCKI edges are provided during a data transaction window, each complete 24-bit word received on SDI will be interpreted as a new SoftSpan configuration word and applied to the SoftSpan configuration register as described above. Any partial words are ignored.

Typically, applications will update the SoftSpan configuration register in the manner shown in Figures 19 and 20. After the opening of a new data transaction window at the falling edge of BUSY, the user supplies a 24-bit DDR SoftSpan configuration word on SDI during the first 12 SCKI cycles. This new word overwrites the internal configuration register contents following the 12th SCKI falling edge. The user then holds SDI low for the remainder of the data transaction window causing the register to retain its contents regardless of the number of additional SCKI cycles applied. SoftSpan settings may be retained across multiple conversions by holding SDI low for the entire data transaction window, regardless of the number of SCKI cycles applied.

BOARD LAYOUT

To obtain the best performance from the LTC2358-18, a four-layer printed circuit board (PCB) is recommended. Layout for the PCB should ensure the digital and analog signal lines are separated as much as possible. In particular, care should be taken not to run any digital clocks or signals alongside analog signals or underneath the ADC. Also minimize the length of the REFBUF to GND (Pin 20) bypass capacitor return loop, and avoid routing CNV near signals which could potentially disturb its rising edge.

Supply bypass capacitors should be placed as close as possible to the supply pins. Low impedance common returns for these bypass capacitors are essential to the low noise operation of the ADC. A single solid ground plane is recommended for this purpose. When possible, screen the analog input traces using ground.

Reference Design

For a detailed look at the reference design for this converter, including schematics and PCB layout, please refer to DC2365, the evaluation kit for the LTC2358-18.

PACKAGE DESCRIPTION

Please refer to http://www.linear.com/product/LTC2358-18#packaging for the most recent package drawings.

LX Package
48-Lead Plastic LQFP (7mm × 7mm)
(Reference LTC DWG # 05-08-1760 Rev A)

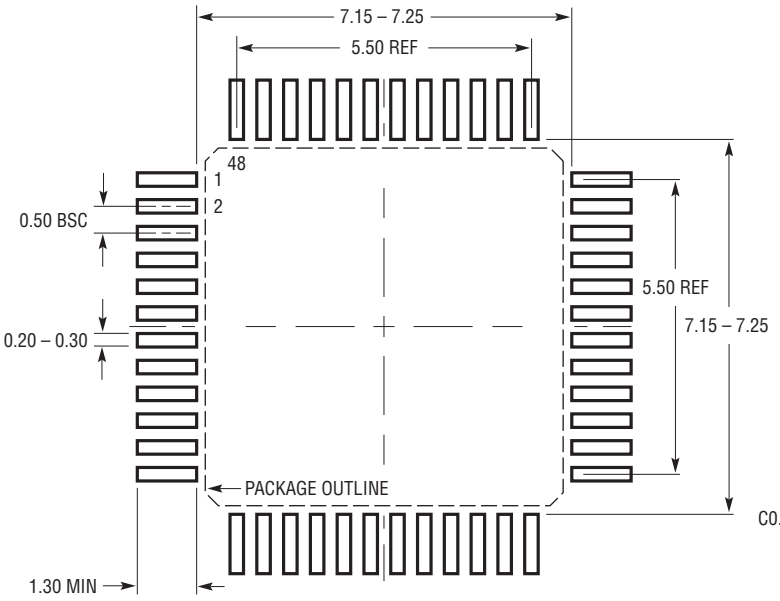

RECOMMENDED SOLDER PAD LAYOUT
APPLY SOLDER MASK TO AREAS THAT ARE NOT SOLDERED

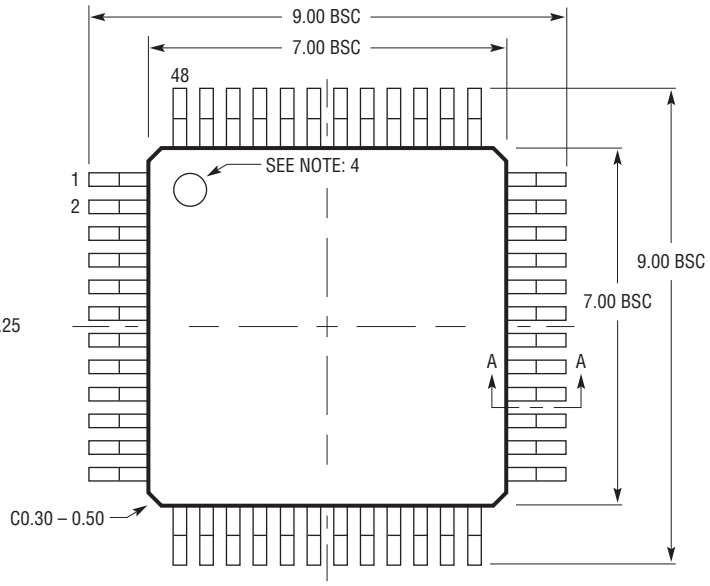

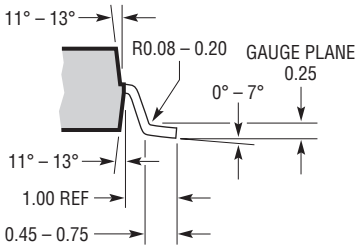

SECTION A – A

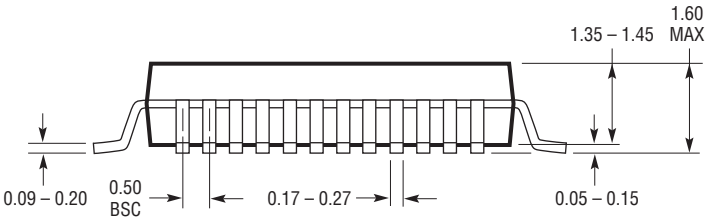

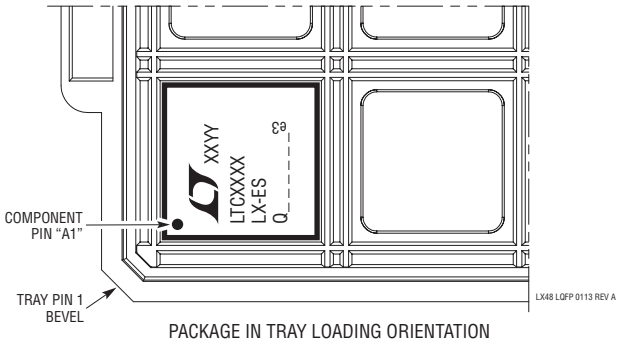

PACKAGE IN TRAY LOADING ORIENTATION

NOTE:
1. PACKAGE DIMENSIONS CONFORM TO JEDEC #MS-026 PACKAGE OUTLINE
2. DIMENSIONS ARE IN MILLIMETERS
3. DIMENSIONS OF PACKAGE DO NOT INCLUDE MOLD FLASH. MOLD FLASH SHALL NOT EXCEED 0.25mm ON ANY SIDE, IF PRESENT
4. PIN-1 INDENTIFIER IS A MOLDED INDENTATION, 0.50mm DIAMETER
5. DRAWING IS NOT TO SCALE

Information furnished by Linear Technology Corporation is believed to be accurate and reliable. However, no responsibility is assumed for its use. Linear Technology Corporation makes no representation that the interconnection of its circuits as described herein will not infringe on existing patent rights.

TYPICAL APPLICATION

Amplify Differential Signals with Gain of 10 Over a Wide Common Mode Range with Buffered Analog Inputs

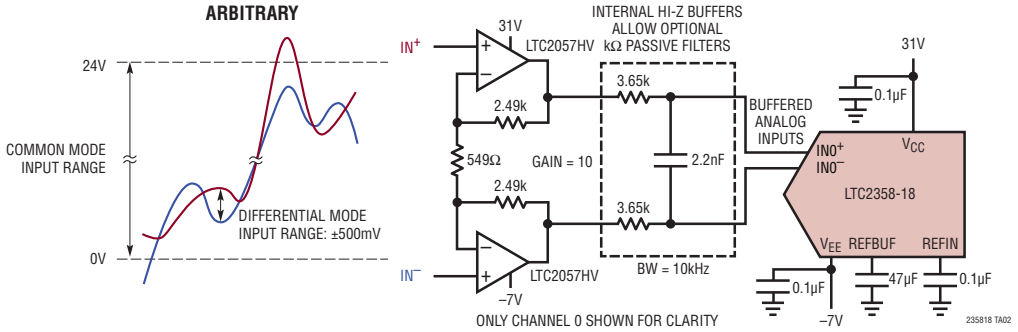

RELATED PARTS

PART NUMBER	DESCRIPTION	COMMENTS
ADCs		
LTC2358-16	16-Bit, 200ksps/Ch, Buffered 8-Channel Simultaneous Sampling, ±1LSB INL, Serial ADC	±10.24V Buffered SoftSpan Inputs with 30V_{P-P} Common Mode Range, 94.2dB SNR, Serial CMOS and LVDS I/O, 7mm × 7mm LQFP-48 Package
LTC2348-18/LTC2348-16	18-/16-Bit, 200ksps/Ch, 8-Channel Simultaneous Sampling, ±3LSB/±1LSB INL, Serial ADC	±10.24V SoftSpan Inputs with Wide Common Mode Range, 97dB/94dB SNR, Serial CMOS and LVDS I/O, 7mm × 7mm LQFP-48 Package
LTC2335-18/LTC2335-16	18-/16-Bit, 1Msps/Ch, 8-Channel Multiplexed, ±3LSB/±1LSB INL, Serial ADC	±10.24V SoftSpan Inputs with Wide Common Mode Range, 97dB/94dB SNR, Serial CMOS and LVDS I/O, 7mm × 7mm LQFP-48 Package
LTC2345-18/LTC2345-16	18-/16-Bit, 200ksps, 8-Channel Simultaneous Sampling, ±5LSB/±1.25LSB INL, Serial ADC	±4.096V SoftSpan Inputs with Wide Common Mode Range, 92dB/91dB SNR, Serial CMOS and LVDS I/O, 7mm × 7mm QFN-48 Package
LTC2378-20/LTC2377-20/ LTC2376-20	20-Bit, 1Msps/500ksps/250ksps, ±0.5ppm INL Serial, Low Power ADC	2.5V Supply, ±5V Fully Differential Input, 104dB SNR, MSOP-16 and 4mm × 3mm DFN-16 Packages
LTC2338-18/LTC2337-18/ LTC2336-18	18-Bit, 1Msps/500ksps/250ksps, Serial, Low Power ADC	5V Supply, ±10.24V Fully Differential Input, 100dB SNR, MSOP-16 Package
LTC2328-18/LTC2327-18/ LTC2326-18	18-Bit, 1Msps/500ksps/250ksps, Serial, Low Power ADC	5V Supply, ±10.24V Pseudo-Differential Input, 95dB SNR, MSOP-16 Package
LTC2373-18/LTC2372-18	18-Bit, 1Msps/500ksps, 8-Channel, Serial ADC	5V Supply, 8 Channel Multiplexed, Configurable Input Range, 100dB SNR, DGC, 5mm × 5mm QFN-32 Package
LTC2379-18/LTC2378-18/ LTC2377-18/LTC2376-18	18-Bit,1.6Msps/1Msps/500ksps/250ksps, Serial, Low Power ADC	2.5V Supply, Differential Input, 101.2dB SNR, ±5V Input Range, DGC, Pin Compatible Family in MSOP-16 and 4mm × 3mm DFN-16 Packages
LTC2380-16/LTC2378-16/ LTC2377-16/LTC2376-16	16-Bit, 2Msps/1Msps/500ksps/250ksps, Serial, Low Power ADC	2.5V Supply, Differential Input, 96.2dB SNR, ±5V Input Range, DGC, Pin Compatible Family in MSOP-16 and 4mm × 3mm DFN-16 Packages
LTC2389-18/LTC2389-16	18-Bit/16-Bit, 2.5Msps, Parallel/Serial ADC	5V Supply, Pin-Configurable Input Range, 99.8dB/96dB SNR, Parallel or Serial I/O 7mm × 7mm LQFP-48 and QFN-48 Packages
LTC2387-18/LTC2387-16	18-/16-Bit, 15Msps SAR ADC	5V Supply, Differential Input, 93.8dB SNR, 5mm × 5mm QFN Package
LTC1859/LTC1858/ LTC1857	16-/14-/12-Bit, 8-Channel, 100ksps, Serial ADC	±10V, SoftSpan, Single-Ended or Differential Inputs, Single 5V Supply, SSOP-28 Package
DACs		
LTC2756/LTC2757	18-Bit, Serial/Parallel I_{OUT} SoftSpan DAC	±1LSB INL/DNL, Software-Selectable Ranges, SSOP-28/7mm × 7mm LQFP-48 Package
LTC2668	16-Channel 16-/12-Bit ±10V V_{OUT} SoftSpan DACs	±4LSB INL, Precision Reference 10ppm/°C Max, 6mm × 6mm QFN-40 Package
References		
LTC6655	Precision Low Drift Low Noise Buffered Reference	5V/2.5V/2.048V/1.25V, 2ppm/°C, 0.25ppm Peak-to-Peak Noise, MSOP-8 Package
LT6657	Precision Low Drift Low Noise Buffered Reference	5V/3V/2.5V, 1.5ppm/°C, 0.5ppm Peak-to-Peak Noise, MSOP-8 Package
Amplifiers		
LTC2057/LTC2057HV	High Voltage, Low Noise Zero-Drift Op Amp	Maximum Input Offset: 4.5µV, Supply Voltage Range: 4.75V to 60V
LT6020	Dual , Micropower, 5V/µs, Rail-to-Rail Op Amp	Maximum Input Offset: 30µV, Maximum Supply Current: 100µA/Amplifier
LT1354/LT1355/LT1356	Single/Dual/Quad 1mA, 12MHz, 400V/µs Op Amp	Good DC Precision, Stable with All Capacitive Loads

© LINEAR TECHNOLOGY CORPORATION 2017