ADC1453D250

Dual 14-bit ADC; up to 246 Msps; JESD204B serial outputs

Rev. 3.2 — 6 June 2014 Preliminary data sheet

1. General description

The ADC1453D is a dual channel 14-bit Analog-to-Digital Converter (ADC) with JESD204B interface (which is backward compatible with the JESD204A interface) optimized for high dynamic performance and low power consumption at sample rates up to 246 Msps. Pipelined architecture and output error correction guarantee zero missing codes over the entire operating range.

The ADC1453D has JESD204B serial outputs over a configurable number of lanes (1 or 2). Multiple Device Synchronization (MDS) allows sample-accurate synchronization of the data outputs of multiple ADC devices. It guarantees a maximum skew of one clock period between as many as 16 output lanes from up to eight ADC1453D devices.

An integrated Serial Peripheral Interface (SPI) allows easy configuration of the ADC. The device also includes a programmable full-scale to allow a flexible input voltage range of 1 V (p-p) to 2 V (p-p).

The ADC1453D is available in an VFQFPN56 package (8 mm × 8 mm outline). It is supported with customer demo boards.

2. Features and benefits

- Dual channel 14-bit resolution ADC
- Sampling rate up to 246 Msps
- JESD204B Device Subclass 0, 1 and 2 with harmonic clocking and deterministic latency support
- ADC Multiple Device Synchronization (MDS)
- Offset binary, two's complement and Gray output data
- Two JESD204B serial output lanes, up to 5 Gbps
- Flexible input voltage range from 1 V (p-p) to 2 V (p-p) by 1 dB steps
- Clock input divider from 1 to 8 supports harmonic clocking
- Duty Cycle Stabilizer (DCS)
- SNR = 70.1 dBFS; fs = 246 Msps; fi = 190 MHz
- SFDR = 80 dBc; f_s = 246 Msps; f_i = 190 MHz
- IMD3 = 86 dBc; f_s = 246 Msps; f_{i1} = 188.5 MHz; f_{i2} = 191.5 MHz
- Analog input bandwidth of 1 GHz (typical)
- Pin to pin compatible with ADC1413D and ADC1443D series
- Typical power dissipation = 1.4 W; f_s = 246 Msps
- Industrial temperature range from −40 °C to +85 °C
- Serial Peripheral Interface (SPI) for configuration control and status monitoring
- VFQFPN56 package; 8 × 8 mm

3. Applications

- Wireless infrastructure: LTE, TD-LTE, WiMAX, MC-GSM, CDMA, WCDMA, TD-SCDMA
- Software defined radio
- Medical non-invasive scanners
- Scientific particle detectors
- Microwave backhaul transceivers
- Aerospace and defense communications and radar systems
- Industrial signal analysis instruments
- General-purpose high-speed applications

4. Ordering information

Table 1. Ordering information

Type number	f_s (Msps)	Package		
		Name	Description	Version
ADC1453D250NGG	246	VFQFPN	plastic thermal enhanced low profile quad flat package; no leads; 56 terminals; resin based; body 8 × 8 × 1.35 mm	PSC-4449

5. Block diagram

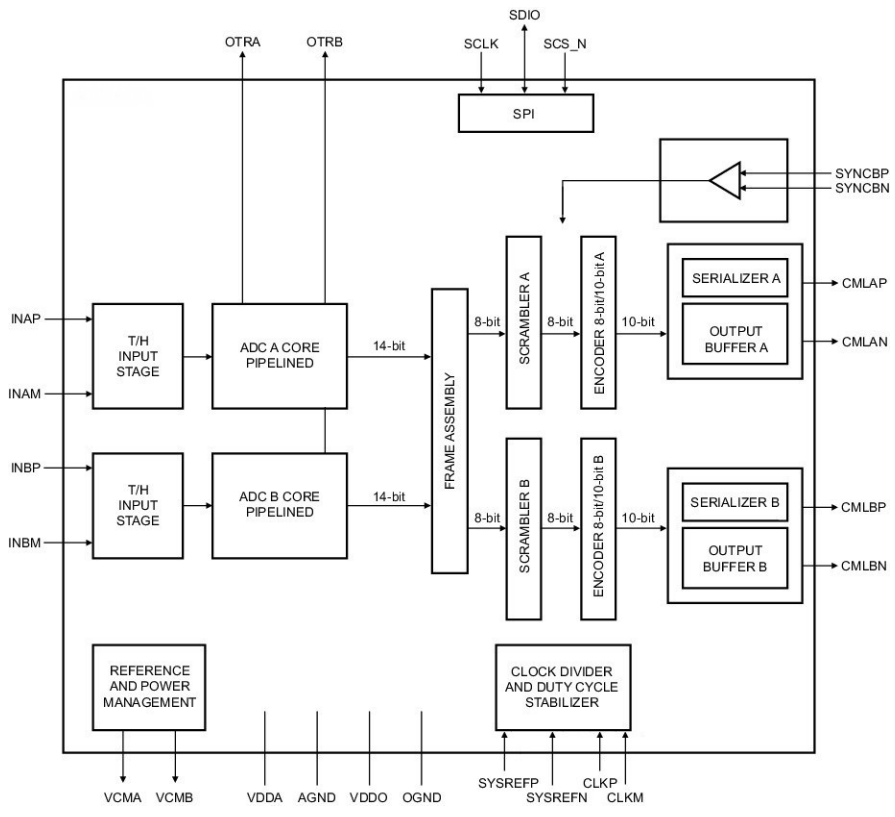

Fig 1. Block diagram

© IDT 2014. All rights reserved.

6. Pinning information

6.1 Pinning

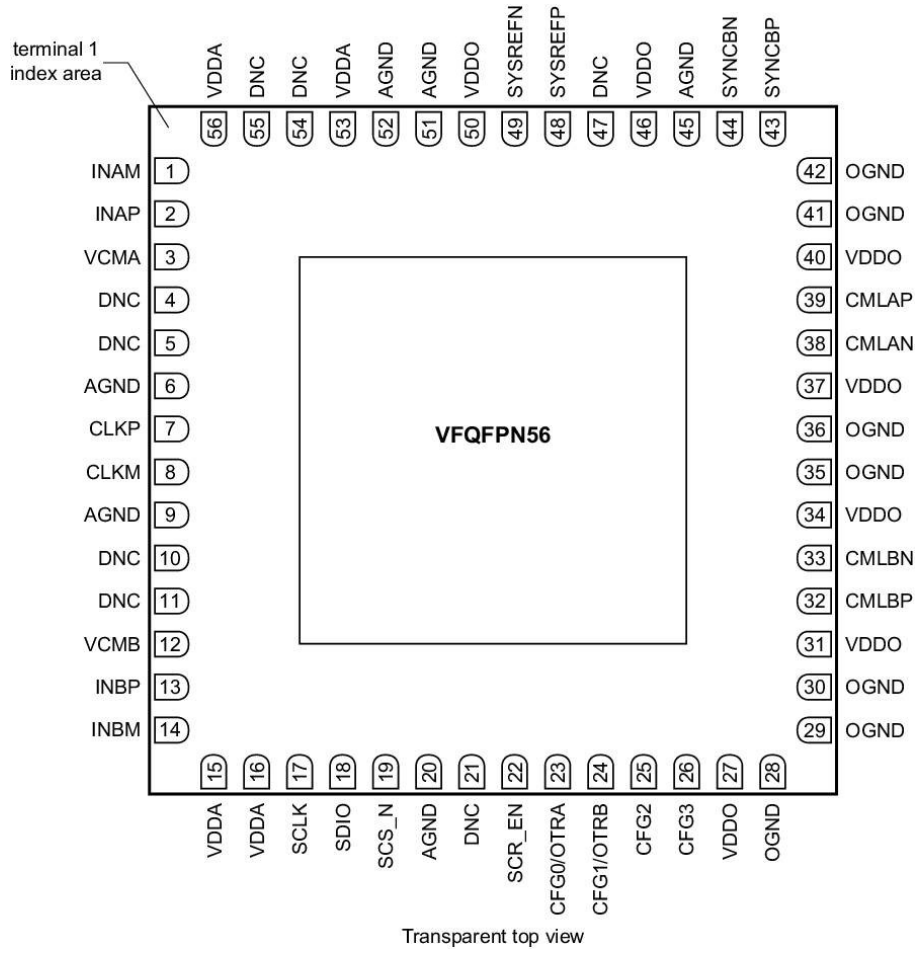

Fig 2. Pin configuration (PSC-4449)

© IDT 2014. All rights reserved.

6.2 Pin description

Table 2. Pin description

Symbol	Pin	Type[1]	Description
INAM	1	I	channel A complementary analog input
INAP	2	I	channel A analog input
VCMA	3	O	channel A output common voltage
DNC	4	-	do not connect
DNC	5	-	do not connect
AGND	6	G	analog ground
CLKP	7	I	clock input
CLKN	8	I	complementary clock input
AGND	9	G	analog ground
DNC	10	-	do not connect
DNC	11	-	do not connect
VCMB	12	O	channel B output common voltage
INBP	13	I	channel B analog input
INBM	14	I	channel B complementary analog input
VDDA	15	P	analog power supply
VDDA	16	P	analog power supply
SCLK	17	I	SPI clock (50 kΩ internal pull-dow)
SDIO	18	I/O	SPI data IO (50 kΩ internal pull-dow)
SCS_N	19	I	SPI chip select (50 kΩ internal pull-up)
AGND	20	G	analog ground
DNC	21	-	do not connect
SCR_EN	22	I	scrambler enable (50 kΩ internal pull-up)
CFG0/OTRA	23	I/O	configuration pin 0/OuT of Range A (OTRA) (50 kΩ internal pull-down)
CFG1/OTRB	24	I/O	configuration pin 1/OuT of Range B (OTRB) (50 kΩ internal pull-down)
CFG2	25	I/O	configuration pin 2 (50 kΩ internal pull-down)
CFG3	26	I/O	configuration pin 3 (50 kΩ internal pull-down)
VDDO	27	P	digital output power supply
AGND	28	G	analog ground
OGND	29	G	digital output ground
OGND	30	G	digital output ground
VDDO	31	P	digital output power supply
CMLBP	32	O	channel B output
CMLBN	33	O	channel B complementary output
VDDO	34	P	digital output power supply
OGND	35	G	digital output ground
OGND	36	G	digital output ground
VDDO	37	P	digital output power supply
CMLAN	38	O	channel A complementary output

© IDT 2014. All rights reserved.

Table 2. Pin description *...continued*

Symbol	Pin	Type[1]	Description
CMLAP	39	O	channel A output
VDDO	40	P	digital output power supply
OGND	41	G	digital output ground
OGND	42	G	digital output ground
SYNCBP	43	I	JESD204B SYNC synchronization signal from receiver
SYNCBN	44	I	complementary SYNC from receiver
AGND	45	G	analog ground
VDDO	46	P	digital output power supply
DNC	47	-	do not connect
SYSREFP	48	I	positive clock synchronization
SYSREFN	49	I	negative clock synchronization
VDDO	50	P	digital output power supply
AGND	51	G	analog ground
AGND	52	G	analog ground
VDDA	53	P	analog power supply
DNC	54	-	do not connect
DNC	55	-	do not connect
VDDA	56	P	analog power supply
AGND	EXP	G	Expose PAD

[1] P: power supply; G: ground; I: input; O: output; I/O: input/output.

6.2.1 Start-up Configuration

Because the maximum sampling clock of the ADC1453D is 246 Msps, care should be taken in case of harmonic clocking. If the input clock frequency is higher than 246 MHz, the clock divider must be set before providing the clock.

In order to avoid any issue, it is recommended to start the device in power-down mode by setting the configuration pins to logic level '1' (see Table 19). This can be done by adding for example a 1 kΩ pull-up resistor on CFG0, CFG1, CFG2 and CFG3.

When the power supplies are set, the divider can be programmed by the use of the SPI registers. Then the device is powered on and the JESD204B configuration is set by the use of the SPI registers (bits CFG_SETUP[3:0] in Table 43).

© IDT 2014. All rights reserved.

7. Limiting values

Table 3. Limiting values
In accordance with the Absolute Maximum Rating System (IEC 60134).

Symbol	Parameter	Conditions	Min	Max	Unit
V_{DDA}	analog supply voltage		–0.3	+2.1	V
V_{DDO}	output supply voltage		–0.3	+2.1	V
ΔV_{DD}	supply voltage difference	$V_{DDA} - V_{DDO}$	–0.8	+0.8	V
V_I	input voltage	pins INP, INM, CLKP and CLKM; referenced to AGND	–0.3	V_{DDA} + 0.3	V
		pins OTR, SCS_N, SDIO, SCLK, CFG, SCR_EN, SYSREFP, SYSREFN, SYNCBP, and SYNCBN; referenced to AGND	–0.3	V_{DDO} + 0.3	V
V_O	output voltage	pin VCM; referenced to AGND	–0.3	V_{DDA} + 0.3	V
		pins CMLP, and CMLN; referenced to OGND	–0.3	V_{DDO} + 0.3	V
T_{stg}	storage temperature		–55	+125	°C
T_{amb}	ambient temperature		–40	+85	°C
T_j	junction temperature		-	125	°C

8. Thermal characteristics

Table 4. Thermal characteristics

Symbol	Parameter	Conditions		Typ	Unit
$R_{th(j-a)}$	thermal resistance from junction to ambient	66 vias	[1]	22.7	K/W
$R_{th(j-c)}$	thermal resistance from junction to case	66 vias	[1]	9.3	K/W

[1] In compliance with JEDEC test board, in free air.

9. Static characteristics

Table 5. Static characteristics[1]

Symbol	Parameter	Conditions	Min	Typ	Max	Unit
Supplies						
V_{DDA}	analog supply voltage		1.7	1.8	1.9	V
V_{DDO}	output supply voltage	serial link up to 4 Gbps	1.7	1.8	1.9	V
		serial link from 4 to 5 Gbps	1.8	1.85	1.9	V
I_{DDA}	analog supply current	f_s = 246 Msps; f_i = 190 MHz	-	407	<tbd>	mA
I_{DDO}	output supply current	f_s = 246 Msps; f_i = 190 MHz	-	345	<tbd>	mA

© IDT 2014. All rights reserved.

Table 5. Static characteristics[1] *...continued*

Symbol	Parameter	Conditions	Min	Typ	Max	Unit
P_{tot}	total power dissipation	f_i = 190 MHz				
		f_s = 246 Msps	-	1.4	<tbd>	W
		Power-down mode	-	10	-	mW
		Sleep mode	-	115	-	mW
Clock inputs: pins CLKP and CLKM (AC-coupled; peak-to-peak)						
$V_{i(clk)}$	clock input voltage	LVPECL	-	±0.8	-	V
		LVDS	-	±0.35	-	V
		SINE differential	±0.5	±1.25	-	V
		LVCMOS single	-	±0.6	-	V
C_I	input capacitance		-	1.2	-	pF
Logic inputs						
I_{IL}	LOW-level input current	absolute value	-	30	-	μA
I_{IH}	HIGH-level input current	absolute value	-	70	-	μA
C_I	input capacitance		-	1.2	-	pF
pins SYSREFP, SYSREFN, SYNCBP, and SYNCBN (differential pins)						
$V_{i(cm)}$	common-mode input voltage		0.925	1.2	1.475	V
$V_{i(dif)}$	differential input voltage		0.2	0.7	-	V
pins SCS_N, SDIO, SCLK, SCR_EN ,CFG, SYNCBP and SYSREFP (Single Ended)						
V_{IL}	LOW-level input voltage		0	-	$0.3V_{DDO}$	V
V_{IH}	HIGH-level input voltage		$0.7V_{DDO}$	-	V_{DDO}	V
Logic output: pins OTRA, OTRB and SDIO						
V_{OL}	LOW-level output voltage		0	-	0.2	V
V_{OH}	HIGH-level output voltage		V_{DDO}-0.2	-	V_{DDO}	V
Digital outputs: pins CMLAP, CMLAN, CMLBP, and CMLBN						
$V_{O(cm)}$	common-mode output voltage	default current	-	1.4	-	V
$V_{O(dif)}$	differential output voltage	default current; peak-to-peak	-	800	-	mV
Analog inputs: pins INP and INM						
I_I	input current		-	±5	-	μA
R_I	input resistance	f_i = 190 MHz	-	400	-	Ω
C_I	input capacitance	f_i = 190 MHz	-	5	-	pF
$V_{I(cm)}$	common-mode input voltage	$V_{INP} = V_{INM}$;T_{amb} = 25 °C	0.8	0.9	1.0	V
B_i	input bandwidth		-	1	-	GHz
$V_{I(dif)}$	differential input voltage	peak-to-peak; full-scale	1	-	2	V
Common-mode output voltage: pins VCMA and VCMB						
$V_{O(cm)}$	common-mode output voltage	$I_{O(cm)}$=1mA	-	0.9	-	V
$I_{O(cm)}$	common-mode output current	T_{amb} = 25 °C	-	-	1	mA
Accuracy						
INL	integral non-linearity	f_s = 246 Msps; f_i = 4.43 MHz	-	±2.1	±6.62	LSB

© IDT 2014. All rights reserved.

Table 5. Static characteristics[1] *...continued*

Symbol	Parameter	Conditions	Min	Typ	Max	Unit
DNL	differential non-linearity	f_s = 246 Msps; f_i = 4.43 MHz; guaranteed no missing codes				
		negative DNL	-0.88	–0.71	-	LSB
		positive DNL	-	+0.87	+1.22	LSB
E_{offset}	offset error		–20	-	+20	mV
E_G	gain error	full-scale	-	4.1	-	%
$M_{G(CTC)}$	channel-to-channel gain matching		-	2.5	-	%
OS	Offset Spur	measured at fs/2 with fs = 246Msps		-80		dBc
Supply						
PSRR	power supply rejection ratio	100 mV (p-p) on V_{DDA}, 0.5 to 2MHz	-	-35	-	dB

[1] Typical values measured at V_{DDA} = 1.8 V; V_{DDO} = 1.85 V; T_{amb} = 25 °C. Minimum and maximum values are across the full temperature range T_{amb} = –40 °C to +85 °C at V_{DDA} = 1.8 V; V_{DDO} = 1.85 V; $V_{I(dif)}$ = 2 V; $V_{INP} - V_{INM}$ = –1.5 dBFS; unless otherwise specified.

© IDT 2014. All rights reserved.

10. Dynamic characteristics

10.1 Dynamic characteristics

Table 6. Dynamic characteristics[1]

Symbol	Parameter	Conditions	f_s = 246Msps			Unit
			Min	Typ	Max	
α_{2H}	second harmonic level	f_i = 70 MHz	-	-89	-	dBc
		f_i = 140 MHz	-	-83	-	dBc
		f_i = 190 MHz	-	-85	-	dBc
		f_i = 230 MHz	-	-82	-	dBc
		f_i = 310 MHz	-	-79	-	dBc
α_{3H}	third harmonic level	f_i = 70 MHz	-	-81	-	dBc
		f_i = 140 MHz	-	-86	-	dBc
		f_i = 190 MHz	-	-80	-	dBc
		f_i = 230 MHz	-	-87	-	dBc
		f_i = 310 MHz	-	-80	-	dBc
SFDR	spurious-free dynamic range	f_i = 70 MHz	-	81	-	dBc
		f_i = 140 MHz	-	82	-	dBc
		f_i = 190 MHz	-	80	-	dBc
		f_i = 230 MHz	-	81	-	dBc
		f_i = 310 MHz	-	79	-	dBc
THD	total harmonic distortion	f_i = 70 MHz	-	-79	-	dBc
		f_i = 140 MHz	-	-80	-	dBc
		f_i = 190 MHz	-	-78	-	dBc
		f_i = 230 MHz	-	-79	-	dBc
		f_i = 310 MHz	-	-76	-	dBc
IMD3	third-order intermodulation distortion	f_{i1} = 68.5 MHz; f_{i2} = 71.5 MHz	-	90	-	dBc
		f_{i1} = 138.5 MHz; f_{i2} = 141.5 MHz	-	88	-	dBc
		f_{i1} = 188.5 MHz; f_{i2} = 191.5 MHz	-	90	-	dBc
		f_{i1} = 228.5 MHz; f_{i2} = 231.5 MHz	-	86	-	dBc
		f_{i1} = 308.5 MHz; f_{i2} = 311.5 MHz	-	88	-	dBc
SNR	signal-to-noise ratio	f_i = 70 MHz	-	70.6	-	dBFS
		f_i = 140 MHz	-	70.5	-	dBFS
		f_i = 190 MHz	-	70.1	-	dBFS
		f_i = 230 MHz	-	69.8	-	dBFS
		f_i = 310 MHz	-	69.3	-	dBFS

© IDT 2014. All rights reserved.

Table 6. Dynamic characteristics[1] *...continued*

Symbol	Parameter	Conditions	f_s = 246Msps			Unit
			Min	Typ	Max	
ENOB	effective number of bits	f_i = 70 MHz	-	11.1	-	bit
		f_i = 140 MHz	-	11.1	-	bit
		f_i = 190 MHz	-	11	-	bit
		f_i = 230 MHz	-	11	-	bit
		f_i = 310 MHz	-	10.9	-	bit
$\alpha_{ct(ch)}$	channel crosstalk	f_i = 140 MHz	-	83	-	dBc
		f_i = 230 MHz	-	82	-	dBc

[1] Typical values measured at V_{DDA} = 1.8 V; V_{DDO} = 1.85 V; T_{amb} = 25 °C. Minimum and maximum values are across the full temperature range T_{amb} = −40 °C to +85 °C at V_{DDA} = 1.8 V; V_{DDO} = 1.85 V; $V_{I(dif)}$ = 2 V; $V_{INP} - V_{INM}$ = −1.5 dBFS; unless otherwise specified.

© IDT 2014. All rights reserved.

10.2 Timing

10.2.1 Clock timing

Table 7. Clock and digital output timing characteristics[1]

Symbol	Parameter	Conditions	Min	Typ	Max	Unit
$t_{lat(data)}$	data latency time	F = 1	54	-	55	clock cycles
		F = 2	45.5	-	46	clock cycles
		F = 4	41	-	41.25	clock cycles
t_{wake}	wake-up time	from Power-down mode	-	60	-	μs
		from Sleep mode	-	54	-	μs
Clock timing						
f_s	sampling rate		180	-	246	MHz
f_{clk}	clock frequency		60	-	1000	MHz
δ_{clk}	clock duty cycle		40	-	60	%

[1] Typical values measured at V_{DDA} = 1.8 V; V_{DDO} = 1.85 V; T_{amb} = 25 °C. Minimum and maximum values are across the full temperature range T_{amb} = −40 °C to 85 °C at V_{DDA} = 1.8 V; V_{DDO} = 1.85 V; $V_{I(dif)}$ = 2 V; $V_{INP} - V_{INM}$ = −1.5 dBFS; unless otherwise specified.

10.2.2 SYSREFP/N and SYNCBP/N timings

Table 8. SYSREF timing

Symbol	Parameter	Conditions	Min	Typ	Max	Unit
t_{su}	set-up time		0.5	-	-	ns
t_h	hold time		(tclk/2) -0.5	-	-	ns

Table 9. SYNCB timing

Symbol	Parameter	Conditions	Min	Typ	Max	Unit
t_{su}	set-up time		0.75	-	-	ns
t_h	hold time		(tclk/2) -0.25	-	-	ns

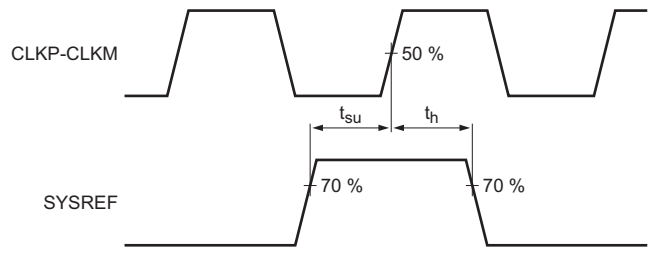

Fig 3. SYSREF timing

© IDT 2014. All rights reserved.

10.2.3 SPI timing

Table 10. SPI timing characteristics [1]

Symbol	Parameter	Conditions	Min	Typ	Max	Unit
$t_{w(SCLK)}$	SCLK pulse width		40	-	-	ns
$t_{w(SCLKH)}$	SCLK HIGH pulse width		16	-	-	ns
$t_{w(SCLKL)}$	SCLK LOW pulse width		16	-	-	ns
t_{su}	set-up time	SDIO to SCLK HIGH	5	-	-	ns
		SCS_N to SCLK HIGH	5	-	-	ns
t_h	hold time	SDIO to SCLK HIGH	2	-	-	ns
		SCS_N to SCLK HIGH	2	-	-	ns
f_{clk}	clock frequency		-	-	25	MHz

[1] Typical values measured at V_{DDA} = 1.8 V; V_{DDO} = 1.85 V; T_{amb} = 25 °C. Minimum and maximum values are across the full temperature range T_{amb} = −40 °C to +85 °C at V_{DDA} = 1.8 V; V_{DDO} = 1.85 V

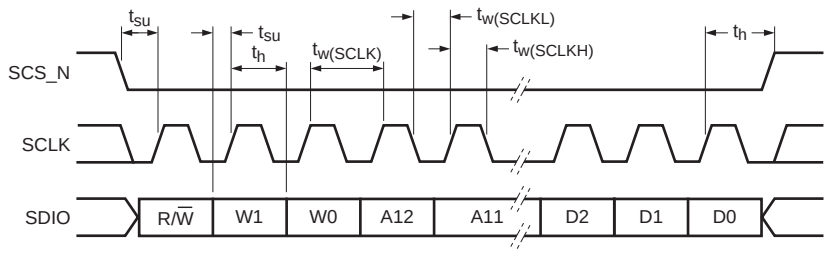

Fig 4. SPI timing

© IDT 2014. All rights reserved.

10.3 Typical dynamic performances[1]

10.3.1 Typical FFT at 246 Msps

TBD Fig 5. 1-tone FFT: −1.5 dBFS; f_i =65 MHz; f_s = 246Msps	TBD Fig 6. 1-tone FFT: −1.5 dBFS; f_i = 190 MHz; f_s = 246 Msps
TBD Fig 7. 1-tone FFT: −14 dBFS; f_i = 190 MHz; f_s = 246 Msps	TBD Fig 8. 2-tone FFT: −7.5 dBFS; f_{i1} = 188.5 MHz; f_{i2} = 191.5 MHz; f_s = 246 Msps

1. Typical values measured at V_{DDA} = 1.8 V; V_{DDO} = 1.85 V; T_{amb} = 25 °C

© IDT 2014. All rights reserved.

10.3.2 Typical performances

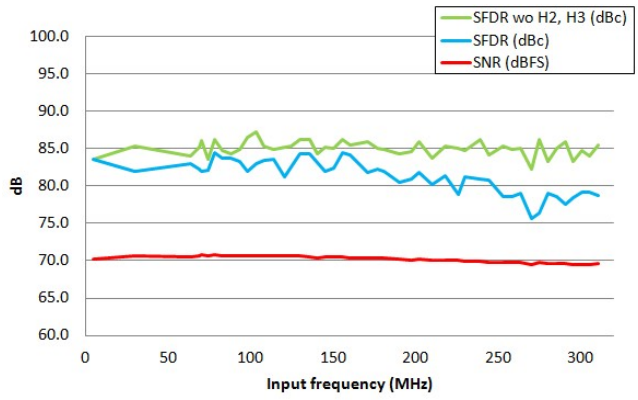

Fig 9. SNR and SFDR as a function of input frequency; −1.5 dBFS

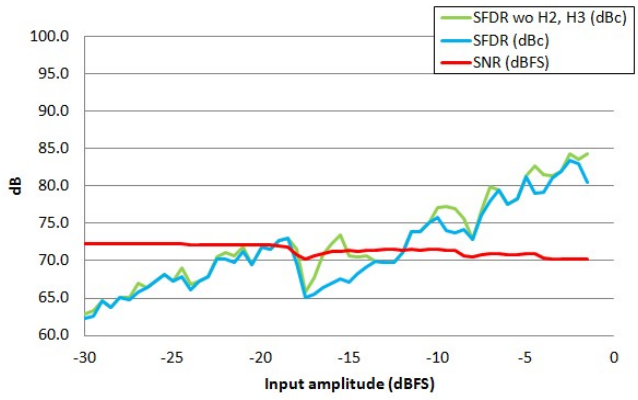

Fig 10. SNR and SFDR as a function of input amplitude; $V_{I(dif)}$ = 2 V

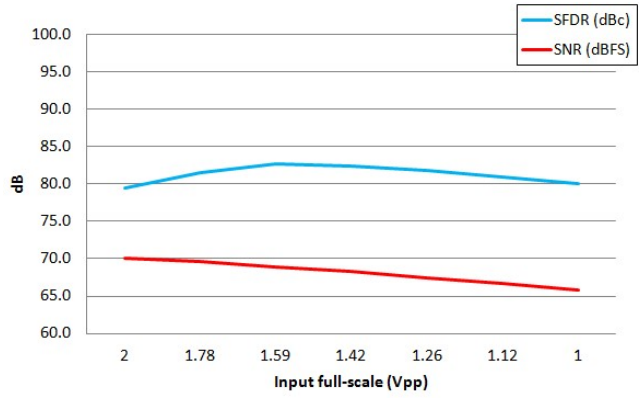

Fig 11. SNR and SFDR as a function of full-scale amplitude; −1.5 dBFS

TBD

Fig 12. tbd

© IDT 2014. All rights reserved.

11. Application information

11.1 Analog inputs

11.1.1 Input stage

The analog input of the ADC1453D supports a differential or a single-ended input drive. Optimal performance is achieved using differential inputs with respect to the common-mode input voltage ($V_{I(cm)}$) on pins INP and INM.

The equivalent circuit of the sample and hold input stage, including ElectroStatic Discharge (ESD) protection circuit and package parasitics, is shown in Figure 13.

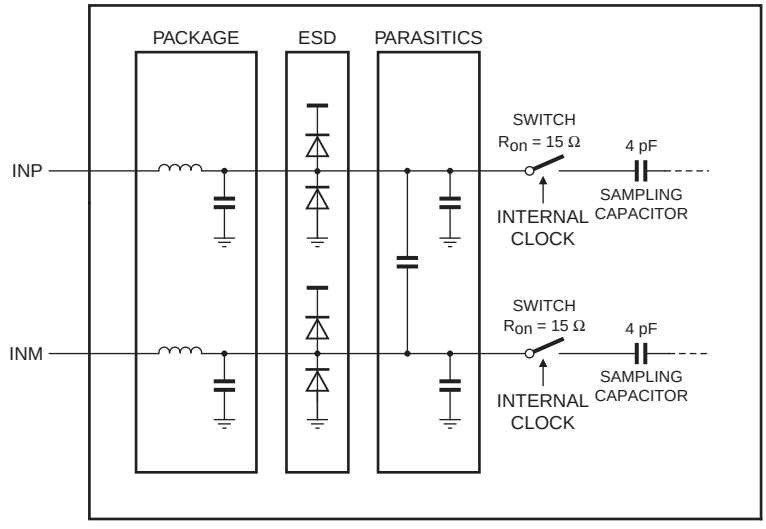

Fig 13. Input sampling circuit

The sample phase occurs when the internal sampling clock (derived from the clock signal on pin CLKP/CLKM) is HIGH. The voltage is then held on the sampling capacitors. When the sampling clock signal becomes LOW, the device enters the hold phase and the voltage information is transmitted to the ADC core.

11.1.2 Common-mode input voltage ($V_{I(cm)}$)

Set the common-mode input voltage ($V_{I(cm)}$) on pins INP and INM externally to 0.9 V for optimal performance.

11.1.3 Pin VCM

When the input stage is AC-coupled, pin VCM can be used to set the common-mode reference for the analog inputs, for instance, via a transformer middle point. Connect a 0.1 μF filter capacitor between pin VCM and ground to ensure a low-noise common-mode output voltage.

© IDT 2014. All rights reserved.

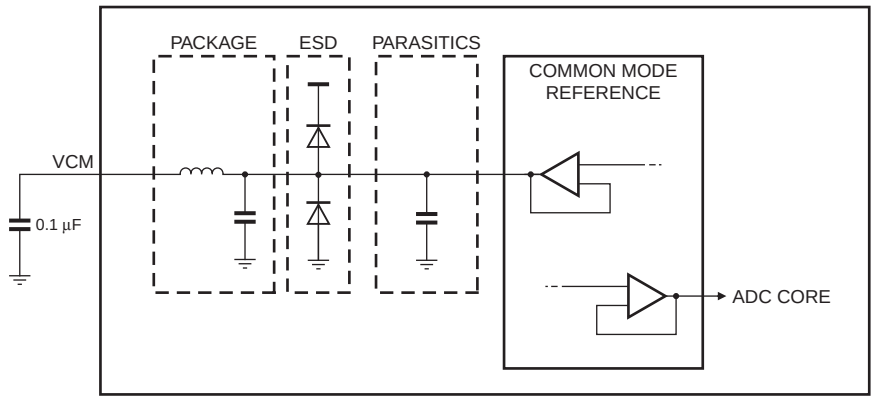

Fig 14. Equivalent schematic of the common-mode reference circuit

11.1.4 Programmable full-scale

The full-scale analog input voltage range is configurable between 1 V (p-p) and 2 V (p-p) by programming internal reference gain between 0 dB and –6 dB in 1 dB steps. The full-scale range can be set independently via bits INTREF[2:0] of the SPI local registers (see Table 11 and Table 30).

Table 11. Reference gain control
Default values are shown highlighted.

INTREF[2:0]	Level (dB)	Full-scale (V (p-p))
000	**0**	**2**
001	–1	1.78
010	–2	1.59
011	–3	1.42
100	–4	1.26
101	–5	1.12
110	–6	1
111	reserved	x

11.1.5 Anti-kickback circuitry

An anti-kickback circuitry (RC-filter in Figure 15) is required to counteract the effects of the charge injection generated by the sampling capacitance.

The RC-filter is also used to filter noise from the signal before it reaches the sampling stage. It is recommended that the capacitor has a value that maximizes noise attenuation without degrading the settling time excessively.

© IDT 2014. All rights reserved.

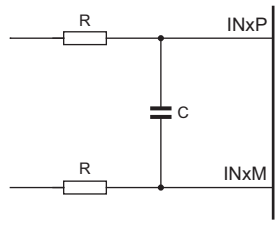

Fig 15. Anti-kickback circuit

The input frequency determines the component values. Select values that do not affect the input bandwidth. The values given in the following table are advised for 50Ω impedance system.

Table 12. RC coupling versus input frequency; typical values

Input frequency range (MHz)	R (Ω)	C (pF)
0 to 50	25	12
50 to 200	10	3.9
200 to 300	5	0.5

11.1.6 Transformer

The input frequency determines the configuration of the transformer circuit. The configuration shown in Figure 16 is suitable for a baseband application.

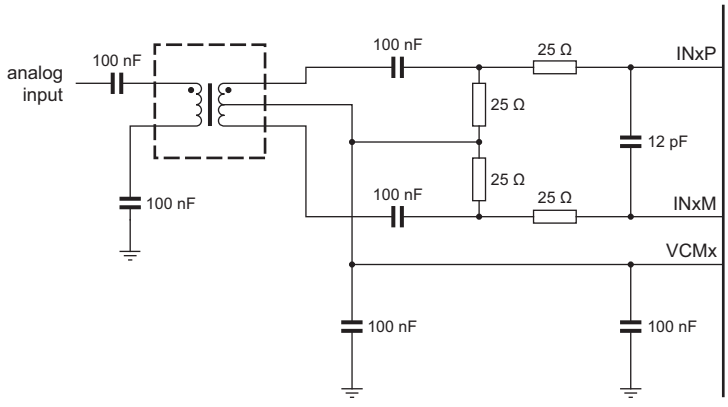

Fig 16. Single transformer configuration (baseband)

© IDT 2014. All rights reserved.

The configuration shown in Figure 17 is recommended for high-frequency applications. In both cases, the choice of transformer is a compromise between cost and performance.

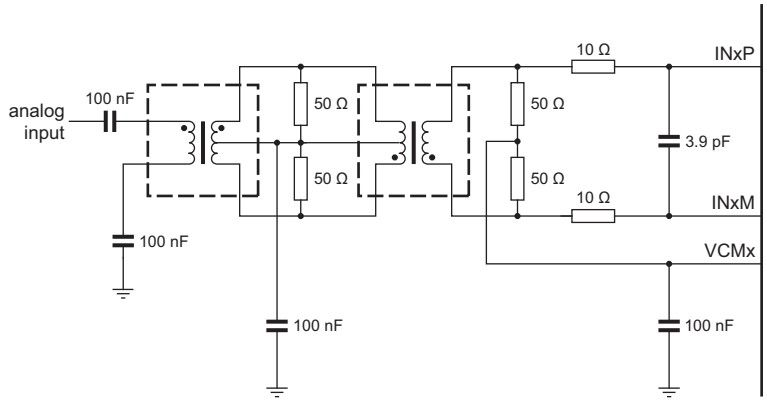

Fig 17. Dual transformer configuration (high IF)

11.2 Clock input

11.2.1 Drive modes

The ADC1453D series can be driven differentially (LVPECL, LVDS or SINE). A single-ended LVCMOS signal connected to either pin CLKP or pin CLKM can also drive the device (connect the complementary pin to ground using a capacitor). The LVPECL is recommended for an optimal performance.

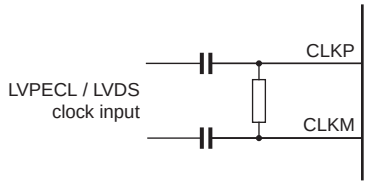

Fig 18. LVPECL/LVDS differential clock input

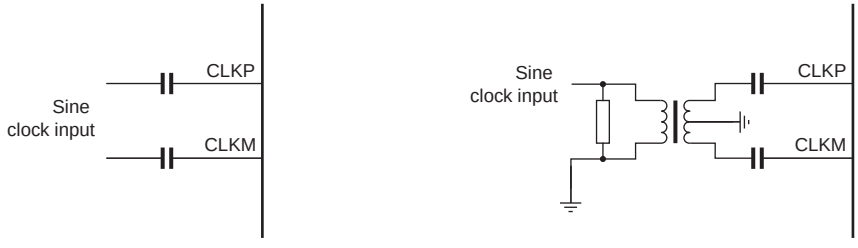

a. Differential sine clock input

b. Single-ended sine clock input (with transformer)

Fig 19. Sine clock input

© IDT 2014. All rights reserved.

a. Rising edge LVCMOS

b. Falling edge LVCMOS

Fig 20. LVCMOS single-ended clock input

Single-ended or differential clock inputs can be selected via bit DIFF_SE of SPI. If single-ended is enabled, the input pin (pin CLKM or pin CLKP) is selected using control bit SE_SEL (see Table 29).

11.2.2 Equivalent input circuit

Figure 21 shows the equivalent circuit of the input clock buffer. The input signal must be AC-coupled and the common-mode voltage of the differential input stage is set via internal 5 kΩ resistors.

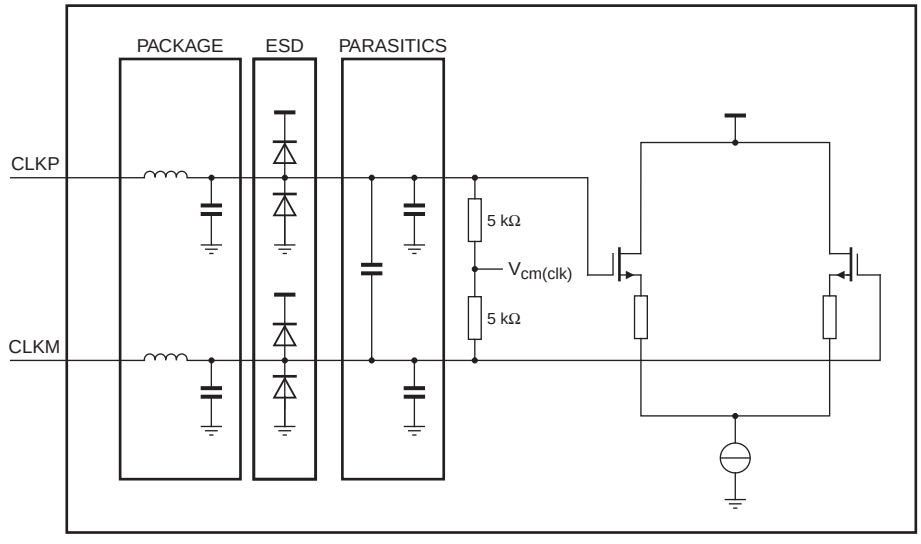

Fig 21. Equivalent input circuit

11.2.3 JESD204B harmonic clocking

The ADC1453D embeds an input clock divider that divides the incoming clock (clock frequency fclk) by a factor of 1 to 8. The output of this divider is then used as sampling clock (sampling frequency fs) (see bits CLK_DIV[2:0] in Table 29).

Caution must be taken to, first power the ADC1453D in «Power Down» mode by setting the CFG Pins to «1111» see Table 19, second, program the clock divider to the wanted value (see bits CLK_DIV[1:0] in Table 29) and finally, set the ADC using the SPI register IP_CFG_SETUP Table 43, to the wanted configuration.

© IDT 2014. All rights reserved.

11.2.4 JESD204B Deterministic Latency (pins SYSREFN and SYSREFP or SYNCBP and SYNCBN)

In the JESD204B standard 3 subclasses have been defined.
Subclass 0: No deterministic latency is required (equivalent to the JESD204A)

Subclass 1: Deterministic latency is required and is realized through the dedicated SYSREFP/N pins.

The deterministic latency can be controlled with a single-ended or a differential SYSREF signal.

When SYSREF is active (High by default), it resets the clock divider phase registers. In a multi-device application and when the clock divider factor is higher than 1, all sampling clock edges for multiple ADC1453D will be aligned (see Table 8 and Figure 3).

On top of this, the SYSREFP/N pins initiates an internal LMFC clock (Local Multi-frame Clock), with a period of a multi-frame F*K (F: number of octets per frame, K: number of frames per multi-frame). See table Table 19 for examples.

A single pulse of SYSREF is needed for both clock divider reset and LMFC initialization. Because the SYSREF processing doesn't stop the data transmission, the signal can also be sent periodically at an harmonic frequency of the LMFC in order to change the alignment. In case of a periodic SYSREF not correlated to the LMFC, the user can program the LMFC to take into account only the first SYSREF pulse (see bit LMFC_periodic_rst in Table 48).

At a SYNC request from the receiver (on pins SYNCBP/N), K28.5 comma characters are sent over the serial lanes. When the receiver releases the SYNC request, then the Initial Lane Alignment (ILA) will start at an edge of the LMFC

At the receiver side, the different lanes are aligned using the ILA start of frame characters and fetched at the next LMFC boundary.

This operation ensures a deterministic latency. See the JESD204B JEDEC standard for more information.

Subclass2: Behavior is similar to Subclass1, but, instead of using a dedicated SYSREF signal, the SYNCBP/N is used for both SYNC request and deterministic latency.

The rising edge of the SYNCBP/N start the LMFC, while the falling edge set the SYNC request and hence start the Initial Lane Alignment according to the JEDEC JESD204B standard.

Below is an example of a Subclass1 ADC1453D registers programming:

Table 13. Subclass1 path activation

Register	value	Comment
DCS_CTRL (@0x043)	0xC7	Choose the SYSREFP/N on rising edge as DCS Reset
JESD204B_CTRL1 (@810)	0xC0	Enable an LMFC periodic reset
JESD204B_CTRL2 (@811)	0x40	Enable a one shot DCS reset
JESD204B_CTRL3 (@812)	0x0A	Activate a Sync fetch at LMFC boundary
SYSREF_CFG (@81E)	0x08	Enable SYSREFP/N on differential mode

© IDT 2014. All rights reserved.

11.2.5 Clock Group Delay

The ADC1453D has the ability to delay the sampling clock when derived from a harmonic clock within the range of a complete sampling clock period and with half harmonic clock period step

The delay can be adjusted over 2 × N steps, where N is the clock divider ratio (bits CLK_DELAY[3:0] in Table 38).

As an example: for a device clock of 500 Mhz and a clock division by 2 (fs = 250 Msps), the sampling clock can be delayed over 4 steps of 1/(2*500 Mhz)= 1 ns.

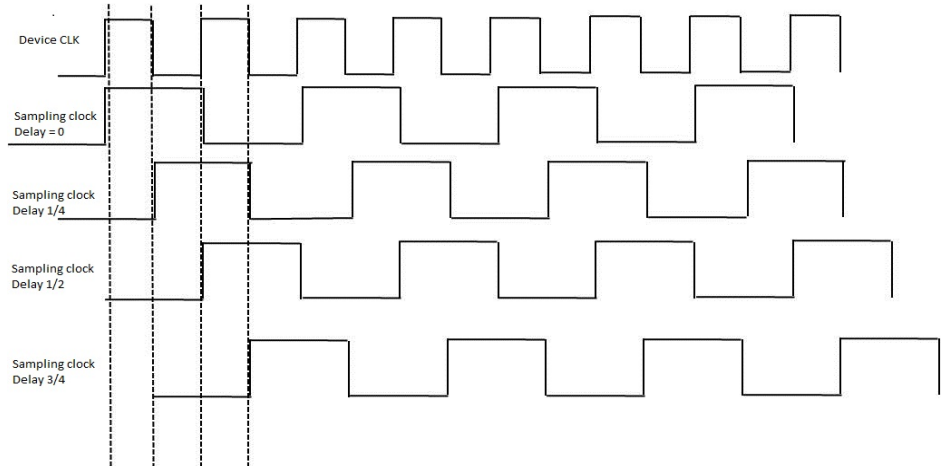

Fig 22. Sampling clock with 4 different clock delay for a 4 clock division

11.3 Digital outputs

11.3.1 Digital output buffers

The JESD204B standard specifies that both the receiver and the transmitter must share the same supply if they are connected in DC-coupling.

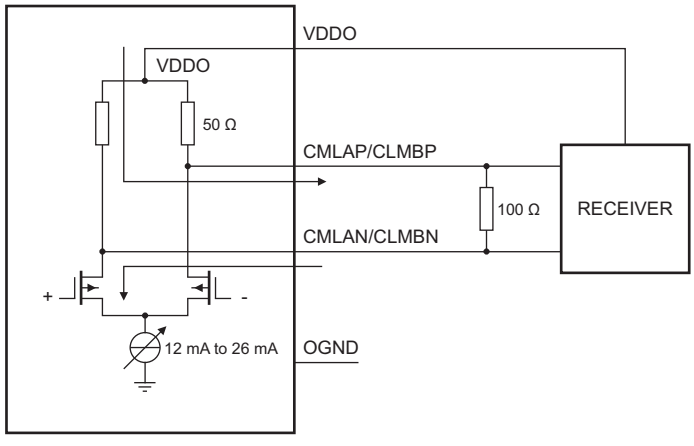

Fig 23. JESD204B serial output - DC-coupled

© IDT 2014. All rights reserved.

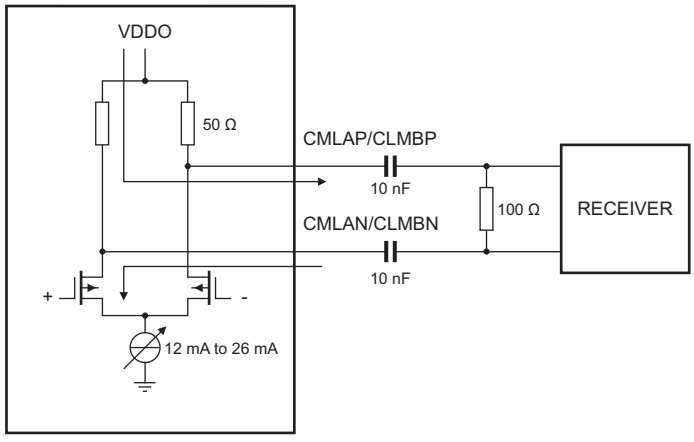

Fig 24. JESD204B serial output - AC-coupled

11.3.2 JESD204B serializer

11.3.2.1 Digital JESD204B formatter

The block placed after the ADC1453D cores implements all the JESD204B standard functionalities. This ensures signal integrity and guarantees the clock and the data recovery at the receiver side.

The block is highly configurable in various ways depending on the sampling frequency and the number of lanes used. All the processing and transmission are done with MSB first.

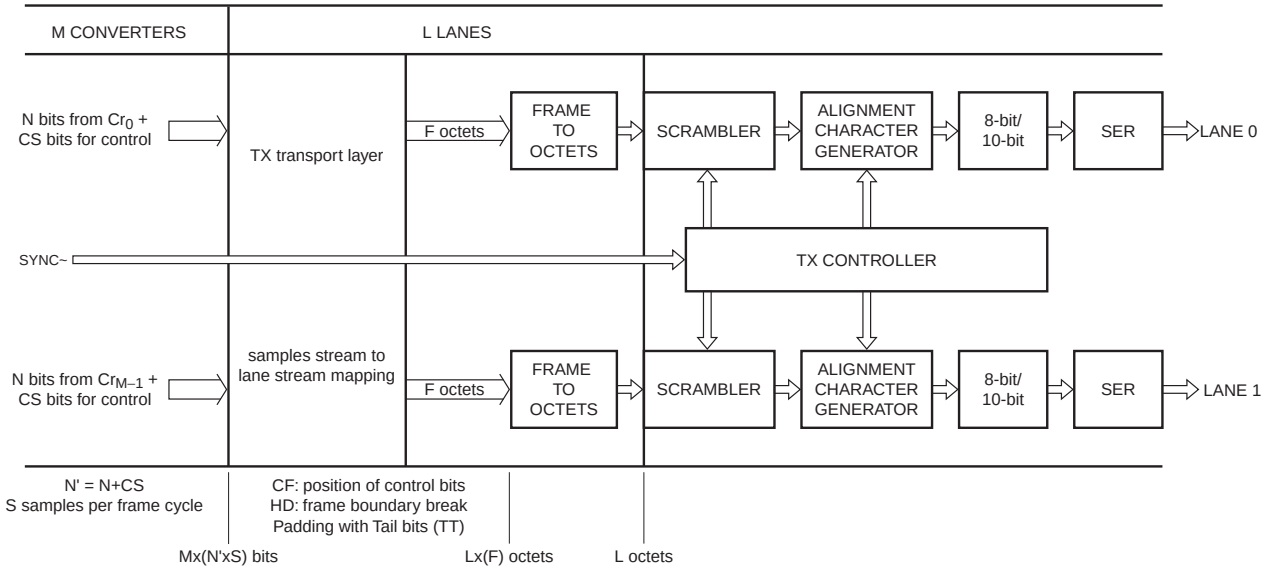

Fig 25. General overview of the JESD204B serializer

© IDT 2014. All rights reserved.

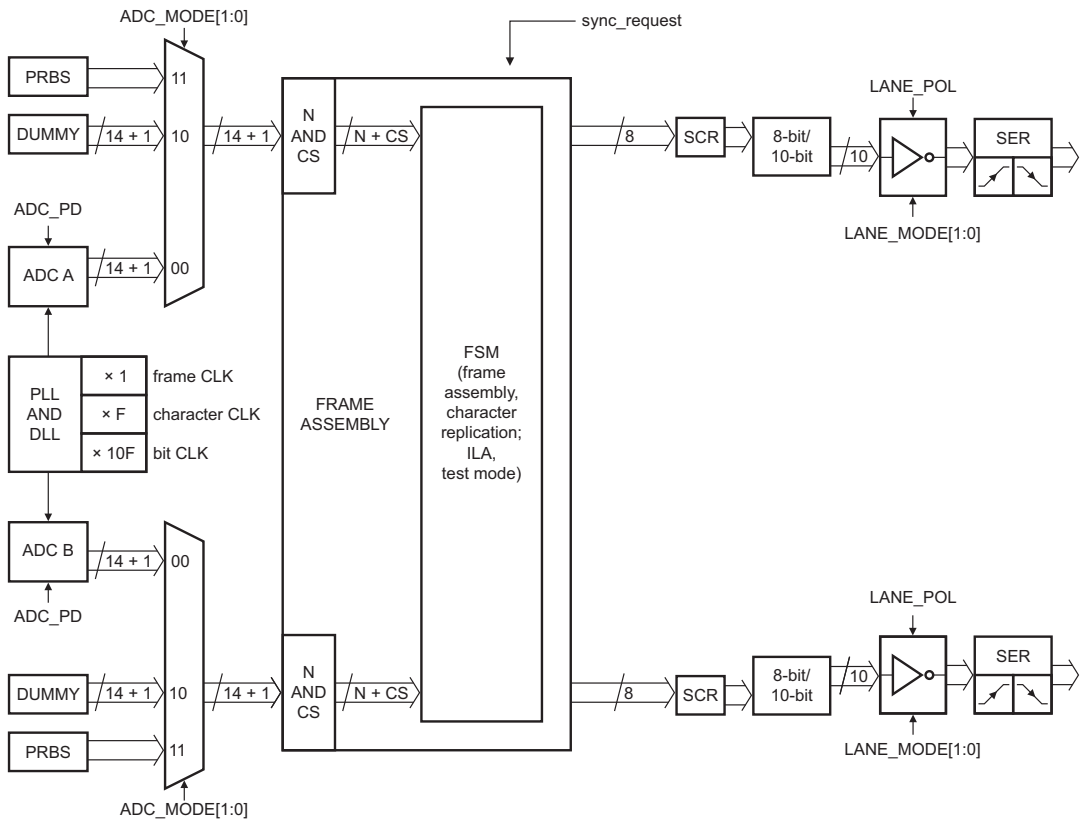

Fig 26. Detailed view of the JESD204B serializer with debug functionalities

11.3.2.2 Scrambler (SCR_EN)

The main purpose of scrambling is to avoid the spectral peaks that would be produced when the same data octet repeats from frame to frame. In general, scrambling makes the spectrum data-independent, so that possible frequency-selective effects on the electrical interface will not cause data-dependent errors. However, all digital operations in converters (including scrambling) cause some amount of switching noise, so there may be applications where it is of advantage to disable the scrambling.

The scrambler can be selected via the pin SCR_EN or the SPI registers (bit SCR_EN in Table 58).

Table 14. Scrambler configuration

Pin SCR_EN	Scrambler
HIGH	enabled
LOW	disabled

An internal pull-up resistor (50 kΩ) sets pin SCR_EN to HIGH when no signal is connected to it. The pin SCR_EN is active only at start-up or after a JESD204B reset (bit SCR_EN in Table 42).

© IDT 2014. All rights reserved.

11.3.3 OuT-of-Range (OTR)

An out-of-range signal is provided on pins OTRA and OTRB. The OTR signal goes logic level HIGH when the input signal exceeds the maximum full scale range.

The latency of OTR is 31 clock cycles. The OTR response can be speeded up by enabling fast OTR using SPI local registers (bit FAST_OTR in Table 37). In this mode, the latency of OTR is reduced to only 11 clock cycles. The fast OTR detection threshold (below full-scale) can be programmed using the SPI local registers (bits FAST_OTR_DET[2:0] in Table 37).

Table 15. Fast OTR register threshold

FAST_OTR_DET[2:0]	Detection level (dB)
000	–18.06
001	–14.54
010	–12.04
011	–8.52
100	**–6.02**
101	–4.08
110	–2.5
111	–1.16

11.3.4 Digital offset

By default, the ADC1453D delivers an output code that corresponds to the analog input. However, it is possible to add a digital offset to the output code using the SPI local registers (bits DIG_OFFSET[5:0] in see Table 16 and Table 33). The digital offset adjustment is coded in two's complement.

Table 16. Digital offset adjustment
Default values are shown highlighted.

DIG_OFFSET[5:0]	Digital offset adjustment (LSB)
10 0000	–32
10 0001	–31
...	...
11 1111	–1
00 0000	**0**
00 0001	+1
...	...
01 1110	+30
01 1111	+31

© IDT 2014. All rights reserved.

11.3.5 Test patterns

The ADC1453D can be configured to transmit a number of predefined test patterns using the SPI local registers (bits TEST_PAT_SEL[2:0] in Table 17 and Table 34). The selected test pattern is transmitted regardless of the analog input.

Table 17. Digital test pattern selection
Default values are shown highlighted.

TEST_PAT_SEL[2:0]	Digital test pattern
000	**Off**
001	Mid code
010	Min code
011	Max code
100	Toggle ‘1111..1111’/’0000..0000’
101	Custom test pattern
110	‘0101..0101’
111	‘1010..1010’

A custom test pattern can be defined using the SPI local registers (bits TEST_PAT_USER[13:6] in Table 35 and bits TEST_PAT_USER[5:0] in Table 36).

11.3.6 Output data format selection

The ADC1453D output data format can be selected (offset binary, two’s complement or gray code) using the SPI local registers (bits DATA_FORMAT[1:0] in Table 32).

11.3.7 Output codes versus input voltage

Table 18. Output codes

$V_{INP} - V_{INM}$	Offset binary	Two’s complement	Gray code	OTR
< –1	00 0000 0000 0000	10 0000 0000 0000	00 0000 0000 0000	1
–1	00 0000 0000 0000	10 0000 0000 0000	00 0000 0000 0000	0
–0.99987793	00 0000 0000 0001	10 0000 0000 0001	00 0000 0000 0001	0
–0.99975586	00 0000 0000 0010	00 0000 0000 0010	00 0000 0000 0011	0
...	...	...	...	0
–0.00024414	01 1111 1111 1110	11 1111 1111 1110	01 0000 0000 0001	0
–0.00012207	01 1111 1111 1111	11 1111 1111 1111	01 0000 0000 0000	0
+0.00012207	10 0000 0000 0000	00 0000 0000 0000	11 0000 0000 0000	0
+0.0.00024414	10 0000 0000 0001	00 0000 0000 0001	11 0000 0000 0001	0
...	...	...	...	0
+0.99975586	11 1111 1111 1101	01 1111 1111 1101	10 0000 0000 0011	0
+0.99987793	11 1111 1111 1110	01 1111 1111 1110	10 0000 0000 0001	0
+1	11 1111 1111 1111	01 1111 1111 1111	10 0000 0000 0000	0
> +1	11 1111 1111 1111	01 1111 1111 1111	10 0000 0000 0000	1

© IDT 2014. All rights reserved.

11.4 Configuration pins (CFG0, CFG1, CFG2, CFG3)

The configuration pins are only active as inputs at start-up. The values on those pins are read once to set up the device. Then the pins become outputs (OTRA and OTRB). Any further modification must be applied via SPI registers.

Each of these pins is internally connected to a 50 kΩ pull-down resistor. In case of harmonic sampling, it is recommended to connect externally a 1 kΩ pull-up resistor in order to start in power-down mode.

Table 19. JESD204B configuration table

CFG 3	CFG 2	CFG 1	CFG 0	ADC A	ADC B	Lane A	Lane B	F[1]	HD[1]	K[1]	M[1]	L[1]
0	0	0	0	**ON**	**ON**	**ON**	**ON**	2	0	9	2	2
0	0	0	1	**ON**	**ON**	**ON**	OFF	4	0	5	2	1
0	0	1	0	**ON**	**ON**	OFF	**ON**	4	0	5	2	1
0	0	1	1				reserved					
0	1	0	0				reserved					
0	1	0	1	**ON**	OFF	**ON**	OFF	2	0	9	1	1
0	1	1	0	**ON**	OFF	OFF	**ON**	2	0	9	1	1
0	1	1	1				reserved					
1	0	0	0				reserved					
1	0	0	1	**ON**	OFF	**ON**	**ON**	1	1	17	1	2
1	0	1	0				reserved					
1	0	1	1				reserved					
1	1	0	0				reserved					
1	1	0	1				reserved					
1	1	1	0				reserved					
1	1	1	1	OFF	OFF	OFF	OFF	2	0	9	2	2

[1] F: Octets per frame clock cycle
HD: High-density mode
K: Frame per multi-frame
M: Converters per device
L: Lane per converter device

For all the configurations, the number of control bit per conversion sample (CS) is 1, the number of control words per frame clock cycle and link (CF) is 0, the number of samples transmitter per single converter per frame cycle (S) is 1 and the formula $(F \times K) \geq 17$ is always verified.

© IDT 2014. All rights reserved.

11.5 Serial Peripheral Interface (SPI)

11.5.1 Register description

The ADC1453D serial interface is a synchronous serial communication port, which allows easy interfacing with many commonly used microprocessors. It provides access to the registers controlling the operation of the chip.

The register bits are either global or local functions:

- A global function operates over the full IC behavior. A local function operates on one or several previously selected channels only. If a channel is selected, the next WRITE command in the local registers applies to the selected channel. The WRITE command has no impact on channels that are not selected. This makes it possible to apply different configurations on each channel by first selecting a specific channel and then all the related settings.
- Select only one channel during a READ operation of the local registers. If several channels are selected, the READ operation occurs on the channel A.

Programming all registers at the same time is required:

- The IC allows the storage of a set of settings for the addresses 06h to 23h, which enables the configuration of all registers simultaneously by setting bit TRANSFER to HIGH (see Table 40). This bit is auto-clearing. This function can be disabled using SPI (bit TRANS_DIS in Table 40). The registers are then updated at each WRITE operation.
- The transfer function does not apply to a READ operation.

The SPI interface is configured as a 3-wire type: pin SDIO is the bidirectional pin, pin SCLK is the serial clock input and SCS_N is the chip select pin.

A LOW level on pin SCS_N initiates each READ/WRITE operation. A minimum of 3 bytes is transmitted (two instruction bytes and at least 1 DATA byte; see Table 21).

Table 20. Instruction bytes for the SPI

Bit:	7 (MSB)	6	5	4	3	2	1	0 (LSB)
Description	R/$\overline{W}$	W1	W0	A12	A11	A10	A9	A8
	A7	A6	A5	A4	A3	A2	A1	A0

- Bit R/$\overline{W}$ indicates whether it is a READ (when HIGH) or a WRITE (when LOW) operation.
- Bits W1 and W0 indicate the number of bytes to be transferred after both instruction bytes (see Table 21).

Table 21. Number of data bytes transferred

W1	W0	Number of bytes transferred
0	0	1 byte
0	1	2 bytes
1	0	3 bytes
1	1	4 or more bytes

© IDT 2014. All rights reserved.

- Bits A12 to A0 indicate the address of the register being accessed. If it concerns a multiple byte transfer, this address is the first register accessed. An address counter is increased to access subsequent addresses.

The steps for a data transfer are:

1. Communication starts with the first rising edge on pin SCLK after a falling edge on pin SCS_N.
2. The first phase is the transfer of the 2-byte instruction.
3. The second phase is the transfer of the data. Its length varies, but it is always a multiple of 8 bits. The MSB is always sent first (for instruction and data bytes).
4. A rising edge on pin SCS_N indicates the end on data transmission.

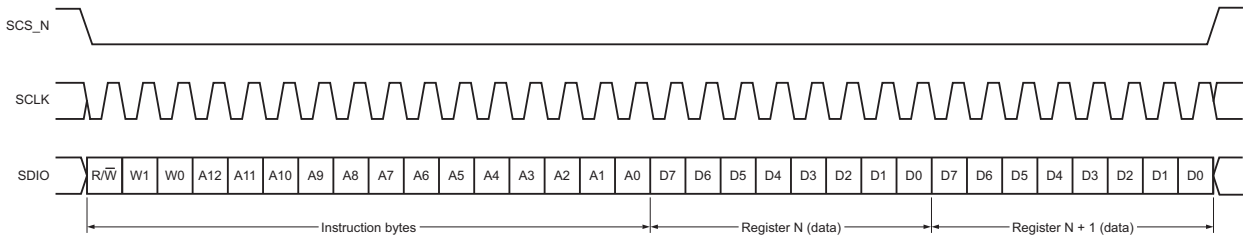

Fig 27. SPI mode timing

© IDT 2014. All rights reserved.

11.5.2 Start-up programing

At power-up or after a reset by SPI, the device needs a start-up programming for optimum performances. This initialization is done in 3 steps:

Table 22. Step 1 - Clock divider programming

register address (hex)	value (hex)	comment
0007	CLK_DIV[2:0] in Table 29	in case of harmonic clocking

Table 23. Step 2 - JESD204B initialization

register address (hex)	value (hex)	comment
080c	01	
080c	00	
0803	CFG_SETUP[3:0] in Table 43	JESD204B configuration
0802	08	frame assembler subclock reset

Table 24. Step 3 - ADC core initialization

register address (hex)	ADC1453D250 value (hex)	comment
0100	d1	
0200	01	
00ff	80	registers updated on each WRITE command
0012	0f	
0024	01	
0040	80	
040a	05	
0102	07	
0103	67	
0108	93	
0109	02	
010a	C5	
010b	01	
0160	ff	
0161	1f	
0170	10	
0171	10	
0400	00	
0401	18	
0409	10	
-	-	wait for 200 ms
0004	08	
-	-	wait for 200 ms
0004	40	
-	-	wait for 200 ms
0004	20	

© IDT 2014. All rights reserved.

Table 24. Step 3 - ADC core initialization

register address (hex)	ADC1453D250 value (hex)	comment
-	-	wait for 200 ms
0004	10	
-	-	wait for 200 ms
0409	-	

Those registers adjust some specific currents and timings. The programmed values should not be modified by the customer to ensure proper behavior over temperature and power supply variations.

© IDT 2014. All rights reserved.

11.5.3 Register allocation map

Table 25 shows an overview of all registers.

Table 25. Register allocation map

Addr. (hex)	Register name	R/W	Bit definition								Default
			Bit 7	Bit 6	Bit 5	Bit 4	Bit 3	Bit 2	Bit 1	Bit 0	
ADC control registers											
0000h	CHIP_RST	RW	SW_RST[7:0]								0000 0000
0001h	CHIP_ID	R	CHIP_ID[7:0][1]								0100 0011
0005h	SW_RST	R/W	SW_RST	-	-	-	-	-	-	-	0000 0000
0006h [2]	OP_MODE	R/W	-	-	-	-	-	-	OP_MODE[1:0][3]		0000 0000
0007h	CLK_CFG	R/W	-	-	-	SE_SEL	DIFF_SE	CLK_DIV[2:0]			0000 0000
0008h	INTERNAL_ REF	R/W	-	-	-	-	-	INTREF[2:0]			0000 0000
0009h	CHANNEL_ SEL	R/W	-	-	-	-	-	-	ADC_B	ADC_A	0000 1111
0011h	OUTPUT_ CFG	R/W	-	-	-	-	-	DATA_ SWAP	DATA_FORMAT[1:0]		0000 0000
0013h	DIG_OFFSET	R/W	DIG_OFFSET[5:0]						-	-	0000 0000
0014h	TEST_CFG_1	R/W	-	-	-	-	-	TEST_PAT_SEL[2:0]			0000 0000
0015h	TEST_CFG_2	R/W	TEST_PAT_USER[13:6]								0000 0000
0016h	TEST_CFG_3	R/W	TEST_PAT_USER[5:0]						-	-	0000 0000
0017h	OTR_CFG	R/W	-	-	-	RESERVED	FAST_ OTR	FAST_OTR_DET[2:0]			0001 0100
0042h	GRD_CTRL	R/W	RESERVED				CLK_DELAY[3:0]				0000 0000
0043h	DCS_CTRL	R/W	RESERVED						DIV_RESET _POL	DIV_RESE T_SEL	1100 0100
00FFh	TRANS_CFG	R/W	TRANS_ DIS	TRANSFER	-	-	-	-	-	-	0000 0000
JESD204B control											
0801h	IP_STATUS	R	RXSYNC_ ERR_FLG	RESERVED[5:0]						PLL_LOCK	0100 0010
0802h	IP_RST	R/W	SW_ RST	-	-	-	ASSEMBLER_ SW_RST	-	-	-	0000 0000

© IDT 2014. All rights reserved.

Table 25. Register allocation map *...continued*

Addr. (hex)	Register name	R/W	Bit definition								Default
			Bit 7	Bit 6	Bit 5	Bit 4	Bit 3	Bit 2	Bit 1	Bit 0	
0803h	IP_CFG_ SETUP	R/W	-	-	-	-	CFG_STP[3:0]				0000 0000
0805h	IP_CTRL1	R/W	RESERVED	TRISTATE_ CFG_PAD	SYNCB_ POL	SYNCB_SE	EN_ RXSYNC_ERR	RESERVED			0000 1001
0806h	IP_CTRL2	R/W	RESERVED						SWP_ ‘LANE_A_B	SWP_ ADC_A_B	0011 0100
080Bh	IP_PRBS_ CTRL	R/W	RESERVED						PRBS_ TYPE	RES	0000 0000
0810h	JESD204B_C TRL1	R/W	LMFC_ periodic_rst	LMFC_ reset_en	-	-	-	-	-	-	0000 0000
0811h	JESD204B_C TRL2	R/W	DCS_ periodic_rst	DCS_ reset_en	-	-	-	-	-	-	0000 0000
0812h	JESD204B_C TRL3	R/W	-	-	-	-	sync_ at_lmfc_en	-	sync_captur e_path	-	0000 0000
0816h	IP_DEBUG_ OUT1	R/W	-	-	-	-	-	-	PAT_OUT[9:8]		0000 0010
0817h	IP_DEBUG_ OUT2	R/W	PAT_OUT[7:0]								1010 1010
0818h	IP_DEBUG_ IN1	R/W	PAT_IN[15:8]								1110 0110
0819h	IP_DEBUG_ IN2	R/W	PAT_IN[7:0]								1110 1010
081Bh	IP_ TESTMODE	R/W	RESERVED	LOOP_ ALIGN	DIS_REPL_ CHAR	BYP_ ALIGN	RESERVED				0000 0000
081Ch	IP_EXPERT_ DOOR	R/W	KEY[7:0]								0000 0000
081Eh	SYSREF_CFG	R/W	-	-	-	-	SYSREF_EN	SYSREF_ SE	-	-	0000 0000
0822h	SCR_L	R/W	SCR_EN	RESERVED						L	0000 0001
0824h	CFG_K	R/W	-	-	-	K[4:0]					000x xxxx
0827h	JESD_SUB	R/W	SUBCLASS[2:0]			RESERVED					000x xxxx
0828h	JESD_VER	R/W	VERSION[2:0]			-	-	RESERVED			0000 0xxx

© IDT 2014. All rights reserved.

Table 25. Register allocation map *...continued*

Addr. (hex)	Register name	R/W	Bit definition								Default
			Bit 7	Bit 6	Bit 5	Bit 4	Bit 3	Bit 2	Bit 1	Bit 0	
086Bh	OUTBUF_A_SWING	R/W	RESERVED					SWING[2:0]			0000 0011
086Ch	OUTBUF_B_SWING	R/W	RESERVED						SWING[2:0]		0000 0011
0871h	LANE_A_0_CTRL	R/W	RESERVED			LANE_MODE[1:0]		LANE_POL	RESERVED	LANE_PD	0000 0000
0872h	LANE_B_0_CTRL	R/W	RESERVED			LANE_MODE[1:0]		LANE_POL	RESERVED	LANE_PD	0000 0000
0890h	ADC_A_0_CTRL	R/W	-	-	ADC_MODE[1:0]		-	-	-	ADC_PD	0000 0000
0891h	ADC_B_0_CTRL	R/W	-	-	ADC_MODE[1:0]		-	-	-	ADC_PD	0000 0000

[1] The READ-ONLY and RESERVED registers.

[2] The registers influenced by the TRANSFER function.

[3] The LOCAL registers.

© IDT 2014. All rights reserved.

11.5.4 Detailed register description

The tables in this section contain detailed descriptions of the registers.

11.5.4.1 ADC control registers

Table 26. CHIP_RESET register (address 0000h) bit description
Default settings are shown highlighted.

Bit	Symbol	Access	Value	Description
7 to 0	SW_RST	R/W	-	resets global and local registers for any value “1” written at any bit (auto-clear).

Table 27. SW_RESET register (address 0005h) bit description
Default settings are shown highlighted.

Bit	Symbol	Access	Value	Description
7	SW_RST	R/W		resets global and local registers
			0	**no reset**
			1	performs a reset to the default values (auto-clear)
6 to 0	-	-	-	not used

Table 28. OP_MODE register (address 0006h) bit description
Default settings are shown highlighted.

Bit	Symbol	Access	Value	Description
7 to 2	-	-	-	not used
1 to 0	OP_MODE[1:0][1]	R/W		operating mode for the selected channel
			00	**normal (power-up)**
			01	power-down
			10	sleep
			11	not used

[1] Local register.

Table 29. CLK_CFG register (address 0007h) bit description
Default settings are shown highlighted.

Bit	Symbol	Access	Value	Description
7 to 5	-	-	-	not used
4	SE_SEL	R/W		single-ended clock input pin selection
			0	**CLKP**
			1	CLKM
3	DIFF_SE	R/W		differential/single-ended clock input selection
			0	**fully differential**
			1	single-ended

© IDT 2014. All rights reserved.

Table 29. CLK_CFG register (address 0007h) bit description *...continued*
Default settings are shown highlighted.

Bit	Symbol	Access	Value	Description
2 to 0	CLK_DIV[2:0]	R/W		clock divider selection
			000	**divide by 1**
			001	divide by 2
			010	divide by 3
			011	divide by 4
			100	divide by 5
			101	divide by 6
			110	divide by 7
			111	divide by 8

Table 30. INTERNAL_REF register (address 0008h) bit description
Default settings are shown highlighted.

Bit	Symbol	Access	Value	Description
7 to 3	-	-	-	not used
2 to 0	INTREF[2:0][1]	R/W	**000**	see Table 11

[1] Local register

Table 31. CHANNEL_SEL register (address 0009h) bit description
Default settings are shown highlighted.

Bit	Symbol	Access	Value	Description
7 to 2	-	-	-	not used
1	ADC_B	R/W		channel B selection for next SPI operation in local registers
			0	not selected
			1	**selected**
0	ADC_A	R/W		channel A selection for next SPI operation in local registers
			0	not selected
			1	**selected**

Table 32. OUTPUT_CFG register (address 0011h) bit description
Default settings are shown highlighted.

Bit	Symbol	Access	Value	Description
7 to 3	-	-	-	not used
2	DATA_SWAP[1]	R/W		output data bits swapped
			0	**no swapping**
			1	MSBs swapped with LSBs
1 to 0	DATA_FORMAT[1:0:][1]	R/W		output data format
			00	**offset binary**
			01	two's complement
			10	gray code
			11	offset binary

© IDT 2014. All rights reserved.

[1] Local register

Table 33. DIG_OFFSET register (address 0013h) bit description
Default settings are shown highlighted.

Bit	Symbol	Access	Value	Description
7 to 2	DIG_OFFSET[7:0][1]	R/W	**000000**	see Table 16
1 to 0	-	-	-	not used

[1] Local register

Table 34. TEST_CFG_1 register (address 0014h) bit description
Default settings are shown highlighted.

Bit	Symbol	Access	Value	Description
7 to 3	-	-	-	not used
2 to 0	TEST_PAT_SEL[2:0][1]	R/W	**000**	see Table 17

[1] Local register

Table 35. TEST_CFG_2 register (address 0015h) bit description
Default settings are shown highlighted.

Bit	Symbol	Access	Value	Description
7 to 0	TEST_PAT_USER[13:6][1]	R/W	**00000000**	custom digital test pattern (bits 13 to 6)

[1] Local register

Table 36. TEST_CFG_3 register (address 0016h) bit description
Default settings are shown highlighted.

Bit	Symbol	Access	Value	Description
7 to 2	TEST_PAT_USER[5:0][1]	R/W	**000000**	custom digital test pattern (bits 5 to 0)
1 to 0	-	-	-	not used

[1] Local register

Table 37. OTR_CFG register (address 0017h) bit description
Default settings are shown highlighted.

Bit	Symbol	Access	Value	Description
7 to 5	-	-	-	not used
4	RESERVED	R/W	1	reserved
3	FAST_OTR[1]	R/W		Selection OTR full-scale/ fast OTR
			0	**OTR full-scale**
			1	fast OTR
2 to 0	FAST_OTR_DET[2:0][1]	R/W	**100**	see Table 15

[1] Local register

© IDT 2014. All rights reserved.

Table 38. GRD_CTRL register (address 0042h) bit description
Default settings are shown highlighted.

Bit	Symbol	Access	Value	Description
7 to 4	RESERVED	R/W	0000	reserved
3 to 0	CLK_DELAY[3:0]	R/W	**0000**	number of delay step expressed in half device clock period unit

Table 39. DCS_CTRL register (address 0043h) bit description
Default settings are shown highlighted.

Bit	Symbol	Access	Value	Description
7 to 2	RESERVED	R/W	110001	reserved
1	DIV_RESET_POL	R/W		Polarity of the DCS reset
			0	**falling edge (Subclass 2)**
			1	Rising edge (Subclass 1)
0	DIV_RESET_SEL	R/W		DCS reset selection
			0	**SYNCBP/N is used (Subclass 2)**
			1	SYSREFP/N is used (Subclass 1)

Table 40. TRANS_CFG register (address 00FFh) bit description
Default settings are shown highlighted.

Bit	Symbol	Access	Value	Description
7	TRANS_DIS	R/W		disable transfer function
			0	**transfer function active**
			1	registers updated on a WRITE command
6	TRANSFER	R/W		updates the registers with the written settings
			0	**settings are stored**
			1	registers updated (auto-clear)
5 to 0	-	-	-	not used

© IDT 2014. All rights reserved.

11.5.4.2 JESD204B control registers

Table 41. IP_STATUS register (address 0801h) bit description
Default settings are shown highlighted.

Bit	Symbol	Access	Value	Description
7	RXSYNC_ERR_FLG	R		RX synchronization error
			0	**no error**
			1	synchronization error has occurred
6 to 1	RESERVED	R/W	100001	reserved
0	PLL_LOCK	R		JEDEC PLL lock
			0	**unlocked**
			1	locked

Table 42. IP_RESET register (address 0802h) bit description
Default settings are shown highlighted.

Bit	Symbol	Access	Value	Description
7	SW_RST	R/W		resets All JESD204B sub-blocks and registers
			0	**no reset**
			1	performs a reset to the default values (auto-clear)
6 to 4	-	-	-	not used
3	ASSEMBLER_SW_RST	R/W		resets RXSYNC_ERR_FLG register bit and the frame assembler sub-block
			0	**no reset**
			1	performs a reset to the default values (auto-clear)
2 to 0	-	-	-	not used

Table 43. IP_CFG_SETUP register (address 0803h) bit description
Default settings are shown highlighted.

Bit	Symbol	Access	Value	Description
7 to 4	-	-	-	not used
3 to 0	CFG_SETUP[3:0]	R/W	**0000**	see Table 44

Table 44. JESD204B configuration table

CFG_SETUP [3:0]	ADC A	ADC B	Lane A	Lane B	F[1]	HD[1]	K[1]	M[1]	L[1]	Lane A serial frequency	Lane B serial frequency
0000	**ON**	**ON**	**ON**	**ON**	2	0	9	2	2	$20 \times f_s$	$20 \times f_s$
0001	**ON**	**ON**	**ON**	OFF	4	0	5	2	1	$40 \times f_s$	0
0010	**ON**	**ON**	OFF	**ON**	4	0	5	2	1	0	$40 \times f_s$
0011	reserved										
0100	reserved										
0101	**ON**	OFF	**ON**	OFF	2	0	9	1	1	$20 \times f_s$	0
0110	**ON**	OFF	OFF	**ON**	2	0	9	1	1	0	$20 \times f_s$
0111	reserved										
1000	reserved										
1001	**ON**	OFF	**ON**	**ON**	1	1	17	1	2	$10 \times f_s$	$10 \times f_s$

© IDT 2014. All rights reserved.

Table 44. JESD204B configuration table *...continued*

CFG_SETUP [3:0]	ADC A	ADC B	Lane A	Lane B	F[1]	HD[1]	K[1]	M[1]	L[1]	Lane A serial frequency	Lane B serial frequency
1010							reserved				
1011							reserved				
1100							reserved				
1101							reserved				
1110							reserved				
1111	OFF	OFF	OFF	OFF	2	0	9	2	2	0	0

[1] F: Octets per frame clock cycle
HD: High-density mode
K: Frame per multi-frame
M: Converters per device
L: Lane per converter device

For all the configurations, the number of control bit per conversion sample (CS) is 1, the number of control words per frame clock cycle and link (CF) is 0, the number of samples transmitter per single converter per frame cycle (S) is 1 and the formula $(F \times K) \geq 17$ is always verified.

Table 45. IP_CTRL1 register (address 0805h) bit description
Default settings are shown highlighted.

Bit	Symbol	Access	Value	Description
7	RESERVED	R/W	0	reserved
6	TRISTATE_CFG_PAD	R/W		CFG pad in tri-state mode
			0	**CFG Pads in Output mode**
			1	CFG Pads in Input mode; operating at power-up
5	SYNCB_POL	R/W		selects synchronization polarity
			0	**synchronization active LOW**
			1	synchronization active HIGH
4	SYNCB_SE	R/W		selects single-ended or differential synchronization
			0	**differential synchronization**
			1	single-ended synchronization on SYNCBP
3	EN_RXSYNC_ERR	R/W		SYNC error reporting
			0	disabled
			1	**enabled**
2 to 0	RESERVED	R/W	001	reserved

Table 46. IP_CTRL2 register (address 0806h) bit description
Default settings are shown highlighted.

Bit	Symbol	Access	Value	Description
7 to 2	RESERVED	R/W	001101	reserved
1	SWP_LANE_A_B	R/W		swaps the lanes
			0	**no swap**
			1	lane A and B are inverted

© IDT 2014. All rights reserved.

Table 46. IP_CTRL2 register (address 0806h) bit description *...continued*
Default settings are shown highlighted.

Bit	Symbol	Access	Value	Description
0	SWP_ADC_A_B	R/W		swaps the ADC at the input of the frame assembler
			0	**no swap**
			1	ADC A and B are inverted

Table 47. IP_PRBS_CTRL register (address 080Bh) bit description
Default settings are shown highlighted.

Bit	Symbol	Access	Value	Description
7 to 2	RESERVED	R/W	000000	reserved
1	PRBS_TYPE	R/W		Pseudo-Random Binary Sequence (PRBS) pattern selection
			0	**PRBS-7; $1 + x^6 + x^7$**
			1	PRBS-23; $1 + x^{18} + x^{23}$
0	RESERVED	R/W	0	reserved

Table 48. JESD204B_CTRL1 register (address 0810h) bit description
Default settings are shown highlighted.

Bit	Symbol	Access	Value	Description
7	LMFC_periodic_rst	R/W		LMFC mode definition
			0	**LMFC reset is done once**
			1	LMFC reset at each SYSREF or SYNC pulse
6	LMFC_reset_en	R/W		LMFC reset selection
			0	**LMFC reset is disabled (Subclass 0)**
			1	LMFC reset is enabled (Subclass 1 and 2)
5 to 0	RESERVED	R/W	00000	reserved

Table 49. JESD204B_CTRL2 register (address 0811h) bit description
Default settings are shown highlighted.

Bit	Symbol	Access	Value	Description
7	DCS_periodic_rst	R/W		DCS mode definition
			0	**DCS reset is done once**
			1	DCS reset at each SYSREF or SYNC pulse
6	DCS_reset_en	R/W		DCS reset selection
			0	**DCS reset is disabled**
			1	DCS reset is enabled
5 to 0	RESERVED	R/W	00000	reserved

© IDT 2014. All rights reserved.

Table 50. JESD204B_CTRL3 register (address 0812h) bit description
Default settings are shown highlighted.

Bit	Symbol	Access	Value	Description
7 to 4	RESERVED	R/W	0000	reserved
3	sync_at_lmfc_en	R/W		defines the relation between SYNC and LMFC
			0	**SYNC is fetched directly (Subclass 0)**
			1	SYNC is taken at next LMFC boundary (Subclass 1 and Subclass 2)
2	RESERVED	R/W	0	reserved
1	sync_capture_path	R/W		selects SYNC mode
			0	**Subclass 0**
			1	Subclass 1 and Subclass 2
0	RESERVED	R/W	0	reserved

Table 51. IP_DEBUG_OUT1 register (address 0816h) bit description
Default settings are shown highlighted.

Bit	Symbol	Access	Value	Description
7 to 2	-	-	-	not used
1 to 0	PATTERN_OUT[9:8]	R/W	**10**	2 most significant bits of output stage debug word (inserted just before serializer)

Table 52. IP_DEBUG_OUT2 register (address 0817h) bit description
Default settings are shown highlighted.

Bit	Symbol	Access	Value	Description
7 to 0	PATTERN_OUT[7:0]	R/W	**1010 1010**	8 least significant bits of output stage debug word (inserted just before serializer)

Table 53. IP_DEBUG_IN1 register (address 0818h) bit description
Default settings are shown highlighted.

Bit	Symbol	Access	Value	Description
7 to 0	PATTERN_IN[15:8]	R/W	**1110 0110**	8 most significant bits of input stage debug word (inserted in place of ADC data)

Table 54. IP_DEBUG_IN2 register (address 0819h) bit description
Default settings are shown highlighted.

Bit	Symbol	Access	Value	Description
7 to 0	PATTERN_IN[7:0]	R/W	**1110 1010**	8 least significant bits of input stage debug word (inserted in place of ADC data)

Table 55. IP_TESTMODE register (address 081Bh) bit description
Default settings are shown highlighted.

Bit	Symbol	Access	Value	Description
7	RESERVED	R/W	0	reserved
6	LOOP_ALIGN	R/W		continuous ILA[1] sequence
			0	**normal operation**
			1	ILA[1] repeated continuously

© IDT 2014. All rights reserved.

Table 55. IP_TESTMODE register (address 081Bh) bit description *...continued*

Default settings are shown highlighted.

Bit	Symbol	Access	Value	Description
5	DIS_REPL_CHAR	R/W		character replacement function selection
			0	**normal operation**
			1	character replacement disabled
4	BYP_ALIGN	R/W		ILA[1] sequence function selection
			0	**normal operation**
			1	ILA[1] sequence disabled
3 to 0	RESERVED	R/W	0000	reserved

[1] ILA = Initial Lane Alignment Sequence (see JESD204 JEDEC standard).

Table 56. IP_EXPERT_DOOR register (address 081Ch) bit description

Default settings are shown highlighted.

Bit	Symbol	Access	Value	Description
7 to 0	KEY[7:0]	R/W	**0000 0000**	8-bit key (0x4a) to enable write access for scrambler (register 0822h) and parameter K (register 0824h)

Table 57. SYSREF_CFG register (address 081Eh) bit description

Default settings are shown highlighted.

Bit	Symbol	Access	Value	Description
7 to 4	RESERVED	R/W	0000	reserved
3	SYSREF_EN	R/W		enables SYSREFP/N path
			0	**SYSREFP/N path disabled**
			1	SYSREFP/N path enabled
2	SYSREF_SE	R/W		selects single-ended or differential SYSREF
			0	**SYSREFP/SYREFN are used as differential pair**
			1	SYSREFP is used as single ended SYSREF input
1 to 0	RESERVED	R/W	00	reserved

Table 58. SCR_L register (address 0822h) bit description (IP_EXPERT_DOOR write access needed, address 081Ch)

Default settings are shown highlighted.

Bit	Symbol	Access	Value	Description
7	SCR_EN	R/W		selects the scrambler function
			0	**scrambler disabled**
			1	scrambler enabled
6 to 1	RESERVED	R/W	000000	reserved
0	L	R/W		lanes number minus 1
			0	1 lane
			1	**2 lanes**

© IDT 2014. All rights reserved.

Table 59. CFG_K register (address 0824h) bit description (IP_EXPERT_DOOR write access needed, address 081Ch)

Default settings are shown highlighted.

Bit	Symbol	Access	Value	Description
7 to 5	-	-	-	not used
4 to 0	K[4:0]	R/W	**000x xxxx**	Number of frames in a multi-frame. Default value depends on the JESD204B configuration.

Table 60. JESD_SUB register (address 0827h) bit description

Default settings are shown highlighted.

Bit	Symbol	Access	Value	Description
7 to 5	SUBCLASS[2:0]	R/W	**000**	JESD204 subclass information to be written for link configuration information
4 to 0	RESERVED	R/W	xxxxx	reserved

Table 61. JESD_VER register (address 0828h) bit description

Default settings are shown highlighted.

Bit	Symbol	Access	Value	Description
7 to 5	VERSION[2:0]	R/W	**000**	JESD204 version information to be written for link configuration information
4 to 3	-	-	-	not used
2 to 0	RESERVED	R/W	xxx	reserved

Table 62. IP_OUTBUF_A_SWING register (address 086Bh) bit description

Default settings are shown highlighted.

Bit	Symbol	Access	Value	Description
7 to 3	RESERVED[4:0]	R/W	00000	reserved
2 to 0	SWING[2:0]	R/W		Configurable lane Aoutput current
			000	12 mA; ±300 mV (p-p)
			001	14 mA; ±350 mV (p-p)
			010	16 mA; ±400 mV (p-p)
			011	**18 mA; ±450 mV (p-p)**
			100	20 mA; ±500 mV (p-p)
			101	22 mA; ±550 mV (p-p)
			110	24 mA; ±600 mV (p-p)
			111	26 mA; ±650 mV (p-p)

© IDT 2014. All rights reserved.

Table 63. IP_OUTBUF_B_SWING register (address 086Ch) bit description
Default settings are shown highlighted.

Bit	Symbol	Access	Value	Description
7 to 3	RESERVED[4:0]	R/W	00000	reserved
2 to 0	SWING[2:0]	R/W		Configurable lane B output current
			000	12 mA; ±300 mV (p-p)
			001	14 mA; ±350 mV (p-p)
			010	16 mA; ±400 mV (p-p)
			011	**18 mA; ±450 mV (p-p)**
			100	20 mA; ±500 mV (p-p)
			101	22 mA; ±550 mV (p-p)
			110	24 mA; ±600 mV (p-p)
			111	26 mA; ±650 mV (p-p)

Table 64. IP_LANE_A_0_CTRL register (address 0871h) bit description
Default settings are shown highlighted.

Bit	Symbol	Access	Value	Description
7 to 5	RESERVED[2:0]	R/W	000	reserved
4 to 3	LANE_MODE[1:0]	R/W		debug option directly before serializer
			00	**normal mode, ADC path**
			01	0/1 toggle sent over the lanes
			10	IP_DEBUG_OUT value sent over the lanes
			11	10-bit PRBS pattern is sent over the lane
2	LANE_POL	R/W		selects lane polarity
			0	**no inversion**
			1	lane polarity P/N inverted
1	RESERVED	R/W	0	reserved
0	LANE_PD	R/W		Selects lane power mode
			0	**lane is powered-up**
			1	lane is powered-down

Table 65. IP_LANE_B_0_CTRL register (address 0872h) bit description
Default settings are shown highlighted.

Bit	Symbol	Access	Value	Description
7 to 5	RESERVED[2:0]	R/W	000	reserved
4 to 3	LANE_MODE[1:0]	R/W		debug option directly before serializer
			00	**normal mode, ADC path**
			01	0/1 toggle sent over the lanes
			10	IP_DEBUG_OUT value sent over the lanes
			11	10-bit PRBS pattern is sent over the lane
2	LANE_POL	R/W		selects lane polarity
			0	**no inversion**
			1	lane polarity P/N inverted
1	RESERVED	R/W	0	reserved

© IDT 2014. All rights reserved.

Table 65. IP_LANE_B_0_CTRL register (address 0872h) bit description *...continued*
Default settings are shown highlighted.

Bit	Symbol	Access	Value	Description
0	LANE_PD	R/W		Selects lane power mode
			0	**lane is powered-up**
			1	lane is powered-down

Table 66. IP_ADC_A_0_CTRL register (address 0890h) bit description
Default settings are shown highlighted.

Bit	Symbol	Access	Value	Description
7 to 6	RESERVED	R/W	00	reserved
5 to 4	ADC_MODE[1:0]	R/W		debug option at ADC output
			00	**normal mode, ADC path**
			01	ramp pattern
			10	IP_DEBUG_IN value sent i.s.o. ADC data
			11	16-bit PRBS pattern is sent i.s.o. ADC data
3 to 1	RESERVED	R/W	000	reserved
0	ADC_PD	R/W		selects ADC power mode
			0	**ADC is powered-up**
			1	ADC is powered-down

Table 67. IP_ADC_B_0_CTRL register (address 0891h) bit description
Default settings are shown highlighted.

Bit	Symbol	Access	Value	Description
7 to 6	RESERVED	R/W	00	reserved
5 to 4	ADC_MODE[1:0]	R/W		debug option at ADC output
			00	**normal mode, ADC path**
			01	ramp pattern
			10	IP_DEBUG_IN value sent i.s.o. ADC data
			11	16-bit PRBS pattern is sent i.s.o. ADC data
3 to 1	RESERVED	R/W	000	reserved
0	ADC_PD	R/W		selects ADC power mode
			0	**ADC is powered-up**
			1	ADC is powered-down

© IDT 2014. All rights reserved.

12. Package outline

VFQFPN56 : plastic thermal enhanced low profile quad flat package; no leads; 56 terminals; resin based; body 8 x 8 x 1.35 mm

PSC-4449

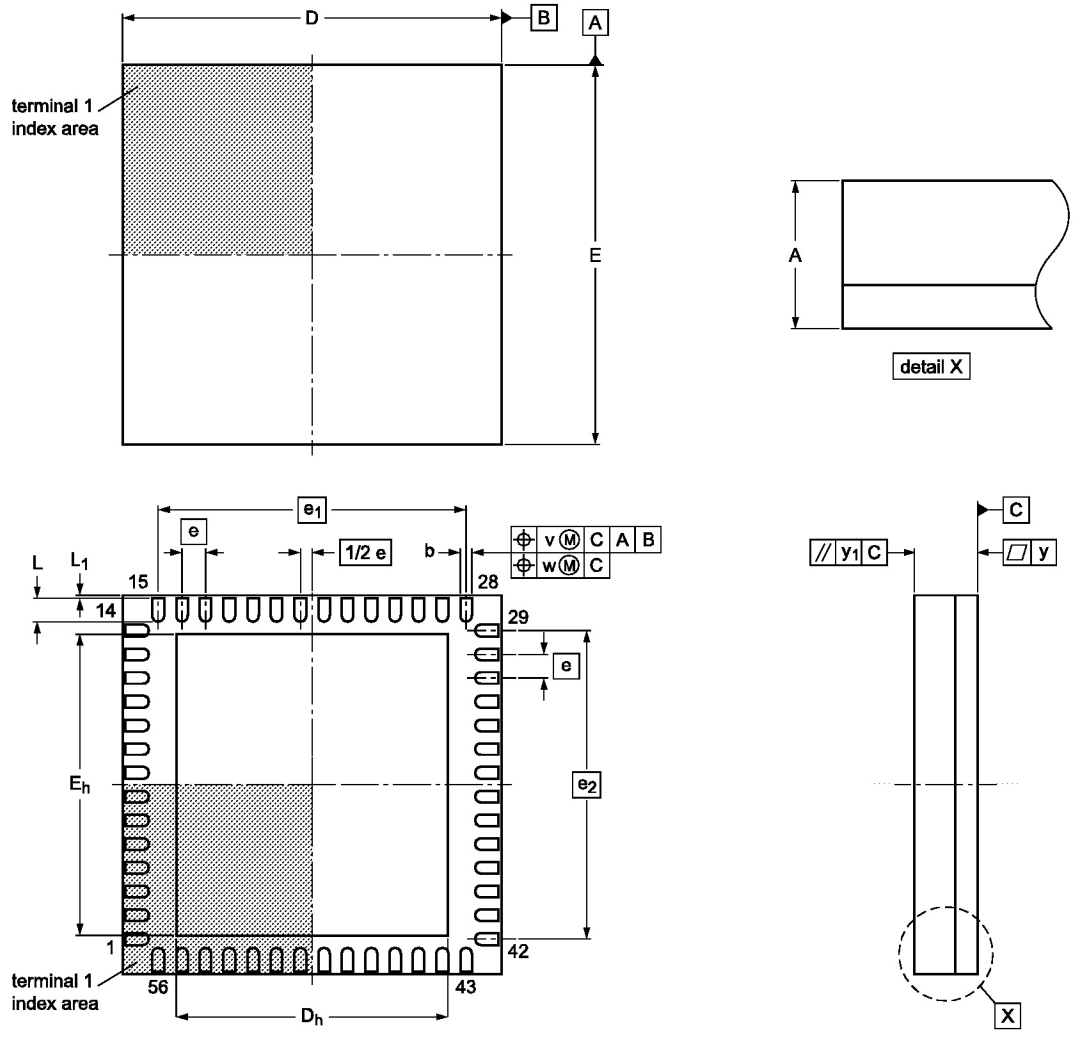

0 10 mm
scale

Dimensions

Unit		A	b	D	D_h	E	E_h	e	e_1	e_2	L	L_1	v	w	y	y_1
	max	1.40	0.30	8.1	5.85	8.1	6.45				0.55	0.10				
mm	nom	1.35	0.25	8.0	5.80	8.0	6.40	0.5	6.5	6.5	0.50	0.05	0.1	0.05	0.05	0.1
	min	1.25	0.20	7.9	5.75	7.9	6.35				0.45	0.00				

Outline version	References				European projection	Issue date
	IEC	JEDEC	JEITA			
PSC-4449						~~11-08-16~~ 11-08-18

Fig 28. Package outline PSC-4449 (VFQFPN56)

© IDT 2014. All rights reserved.

13. Abbreviations

Table 68. Abbreviations

Acronym	Description
ADC	Analog-to-Digital Converter
CDMA	Code Division Multiple Access
DAV	DAta Valid
ESD	ElectroStatic Discharge
FFT	Fast Fourier Transform
GSM	Global System for Mobile communications
ILA	Initial Lane Alignment
IMD3	third order InterMoDulation product
LSB	Least Significant Bit
LTE	Long-Term Evolution
LVDS DDR	Low Voltage Differential Signaling Double Data Rate
LVPECL	Low-Voltage Positive Emitter-Coupled Logic
MIMO	Multiple Input Multiple Output
MSB	Most Significant Bit
OTR	OuT-of-Range
SFDR	Spurious-Free Dynamic Range
SPI	Serial Peripheral Interface
SNR	Signal-to-Noise Ratio
TD-SCDMA	Time Division-Synchronous Code Division Multiple Access
WCDMA	Wideband Code Division Multiple Access
WiMAX	Worldwide interoperability for Microwave Access
Tclk	Period of the Sampling Clock

© IDT 2014. All rights reserved.

14. Revision history

Table 69. Revision history

Document ID	Release date	Data sheet status	Change notice	Supersedes
ADC1453D250 v.3.2	20140606	Preliminary data sheet	- Changed to Preliminary - ADC1453D160 removed - Registers updated - Offset error updated	ADC1453D_SER v.3.1
ADC1453D_SER v.3.1	20140123	Advance data sheet	- Pin 50 changed to VDDO - Min VDDO set to 1.8 V	ADC1453D_SER v.3.0
ADC1453D_SER v.3.0	20131115	Advance data sheet	-	ADC1453D_SER v.1.2
ADC1453D_SER v.1.2	20130402	Objective data sheet	New package outline	ADC1453D_SER v.1.1
ADC1453D_SER v.1.1	20130316	Objective data sheet	-	ADC1453D_SER v.1.0
ADC1453D_SER v.1.0	20130227	Objective data sheet	-	-

Contact information

www.IDT.com

6024 Silver Creek Valley Road
San Jose, California 95138

© IDT 2014. All rights reserved.

15. Contents

1 General description . . . 1
2 Features and benefits . . . 1
3 Applications . . . 2
4 Ordering information . . . 2
5 Block diagram . . . 2
6 Pinning information . . . 3
6.1 Pinning . . . 3
6.2 Pin description . . . 4
6.2.1 Start-up Configuration . . . 5
7 Limiting values . . . 6
8 Thermal characteristics . . . 6
9 Static characteristics . . . 6
10 Dynamic characteristics . . . 9
10.1 Dynamic characteristics . . . 9
10.2 Timing . . . 11
10.2.1 Clock timing . . . 11
10.2.2 SYSREFP/N and SYNCBP/N timings . . . 11
10.2.3 SPI timing . . . 12
10.3 Typical dynamic performances . . . 13
10.3.1 Typical FFT at 246 Msps . . . 13
10.3.2 Typical performances . . . 14
11 Application information . . . 15
11.1 Analog inputs . . . 15
11.1.1 Input stage . . . 15
11.1.2 Common-mode input voltage ($V_{I(cm)}$) . . . 15
11.1.3 Pin VCM . . . 15
11.1.4 Programmable full-scale . . . 16
11.1.5 Anti-kickback circuitry . . . 16
11.1.6 Transformer . . . 17
11.2 Clock input . . . 18
11.2.1 Drive modes . . . 18
11.2.2 Equivalent input circuit . . . 19
11.2.3 JESD204B harmonic clocking . . . 19
11.2.4 JESD204B Deterministic Latency (pins SYSREFN and SYSREFP or SYNCBP and SYNCBN) . . . 20
11.2.5 Clock Group Delay . . . 20
11.3 Digital outputs . . . 21
11.3.1 Digital output buffers . . . 21
11.3.2 JESD204B serializer . . . 22
11.3.2.1 Digital JESD204B formatter . . . 22
11.3.2.2 Scrambler (SCR_EN) . . . 23
11.3.3 OuT-of-Range (OTR) . . . 24
11.3.4 Digital offset . . . 24
11.3.5 Test patterns . . . 25
11.3.6 Output data format selection . . . 25
11.3.7 Output codes versus input voltage . . . 25
11.4 Configuration pins (CFG0, CFG1, CFG2, CFG3) 26
11.5 Serial Peripheral Interface (SPI) . . . 27
11.5.1 Register description . . . 27
11.5.2 Start-up programing . . . 29
11.5.3 Register allocation map . . . 31
11.5.4 Detailed register description . . . 34
11.5.4.1 ADC control registers . . . 34
11.5.4.2 JESD204B control registers . . . 38
12 Package outline . . . 46
13 Abbreviations . . . 47
14 Revision history . . . 48
15 Contents . . . 49

Disclaimer

Integrated Device Technology, Inc. (IDT) and its subsidiaries reserve the right to modify the products and/or specifications described herein at any time and at IDT's sole discretion. All information in this document, including descriptions of product features and performance, is subject to change without notice. Performance specifications and the operating parameters of the described products are determined in the independent state and are not guaranteed to perform the same way when installed in customer products. The information contained herein is provided without representation or warranty of any kind, whether express or implied, including, but not limited to, the suitability of IDT's products for any particular purpose, an implied warranty of merchantability, or non-infringement of the intellectual property rights of others. This document is presented only as a guide and does not convey any license under intellectual property rights of IDT or any third parties.

IDT's products are not intended for use in life support systems or similar devices where the failure or malfunction of an IDT product can be reasonably expected to significantly affect the health or safety of users. Anyone using an IDT product in such a manner does so at their own risk, absent an express, written agreement by IDT.

Integrated Device Technology, IDT and the IDT logo are registered trademarks of IDT. Other trademarks and service marks used herein, including protected names, logos and designs, are the property of IDT or their respective third party owners.

Copyright, 2014. All rights reserved.