KAD5510P

Low Power 10-Bit, 250/210/170/125MSPS ADC

FN7693
Rev 3.00
February 8, 2016

The KAD5510P is a family of low power, high performance 10-bit analog-to-digital converters. Designed with Intersil's proprietary FemtoCharge™ technology on a standard CMOS process, the family supports sampling rates of up to 250MSPS. The KAD5510P is part of a pin-compatible portfolio of 10-, 12- and 14-bit A/Ds with sample rates ranging from 125MSPS to 500MSPS.

A Serial Peripheral Interface (SPI) port allows for extensive configurability, as well as fine control of various parameters such as gain and offset.

Digital output data is presented in selectable LVDS or CMOS formats. The KAD5510P is available in a 48 Ld QFN package with an exposed paddle. Operating from a 1.8V supply, performance is specified across the industrial operating temperature range (-40°C to +85°C).

Key Specifications

- SNR = 60.7dBFS for f_{IN} = 105MHz (-1dBFS)
- SFDR = 86.1dBc for f_{IN} = 105MHz (-1dBFS)
- Total Power Consumption
  - 234/189mW at 250/125MSPS (DDR Mode)

Related Literature

- KAD5510P-50 datasheet, "10-Bit, 500MSPS A/D Converter"

Features

- 1.5GHz analog input bandwidth
- 60fs clock jitter
- Programmable gain, offset and skew control
- Over-range indicator
- Selectable clock divider: ÷1, ÷2 or ÷4
- Clock phase selection
- Nap and sleep modes
- Two's complement, gray code or binary data format
- DDR LVDS-compatible or LVCMOS outputs
- Programmable built-in test patterns
- Single-supply 1.8V operation
- Pb-free (RoHS compliant)

Applications

- Power amplifier linearization
- Radar and satellite antenna array processing
- Broadband communications
- High-performance data acquisition
- Communications test equipment
- WiMAX and microwave receivers

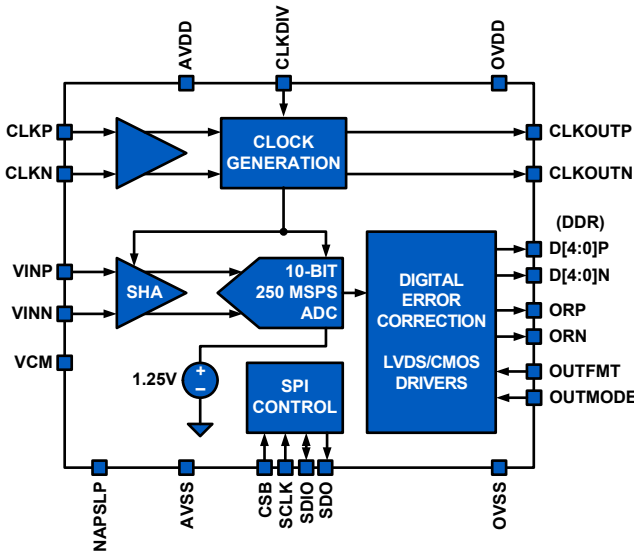

FIGURE 1.

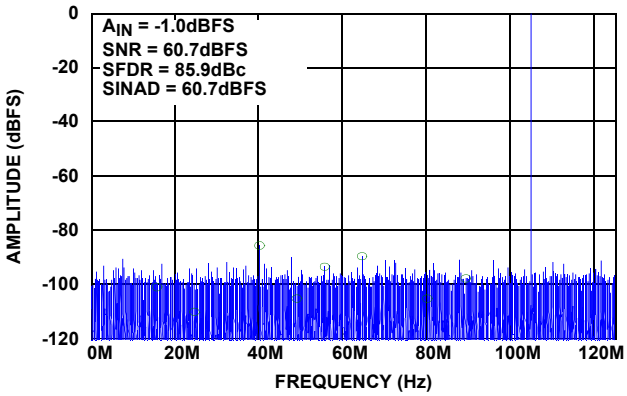

FIGURE 2. SINGLE-TONE SPECTRUM AT 105MHz (250MSPS)

Table of Contents

Pin-Compatible Family . . . 3
Pin Configuration . . . 3
Pin Descriptions . . . 4
Ordering Information . . . 5
Absolute Maximum Ratings . . . 6
Thermal Information . . . 6
Recommended Operating Conditions . . . 6
Digital Specifications . . . 9
Timing Diagrams . . . 10
Switching Specifications . . . 11
Typical Performance Curves . . . 12
Theory of Operation . . . 15
- Functional Description . . . 15
- Power-On Calibration . . . 15
- User-Initiated Reset . . . 16
- Analog Input . . . 16
- VCM Output . . . 17
- Clock Input . . . 17
- Jitter . . . 17
- Voltage Reference . . . 18
- Digital Outputs . . . 18
- Over-Range Indicator . . . 18
- Power Dissipation . . . 18
- Nap/Sleep . . . 18
- Data Format . . . 19

Serial Peripheral Interface . . . 21
- SPI Physical Interface . . . 21
- SPI Configuration . . . 21
- Device Information . . . 22
- Indexed Device Configuration/Control . . . 22
- Global Device Configuration/Control . . . 23
- Device Test . . . 24
- 48-Pin Package Notes . . . 24
- SPI Memory Map . . . 25

Equivalent Circuits . . . 27
ADC Evaluation Platform . . . 28
Layout Considerations . . . 28
- PCB Layout Example . . . 28
- Split Ground and Power Planes . . . 28
- Clock Input Considerations . . . 28
- Exposed Paddle . . . 28
- Bypass and Filtering . . . 28
- LVDS Outputs . . . 28
- LVCMOS Outputs . . . 28
- Unused Inputs . . . 28

General PowerPAD Design Considerations . . . 28
Definitions . . . 29
Revision History . . . 30
About Intersil . . . 30
Package Outline Drawing . . . 31

Pin-Compatible Family

MODEL	RESOLUTION	SPEED (MSPS)	PACKAGE	
			Q48EP	Q72EP
KAD5514P-25/21/17/12	14	250/210/170/125	X	X
KAD5512P-50	12	500		X
KAD5512P-25/21/17/12	12	250/210/170/125	X	X
KAD5512HP-25/21/17/12	12	250/210/170/125	X	X
KAD5510P-50	10	500		X
KAD5510P-25/21/17/12	10	250/210/170/125	X	

Pin Configuration

KAD5510P
(48 LD QFN)
TOP VIEW

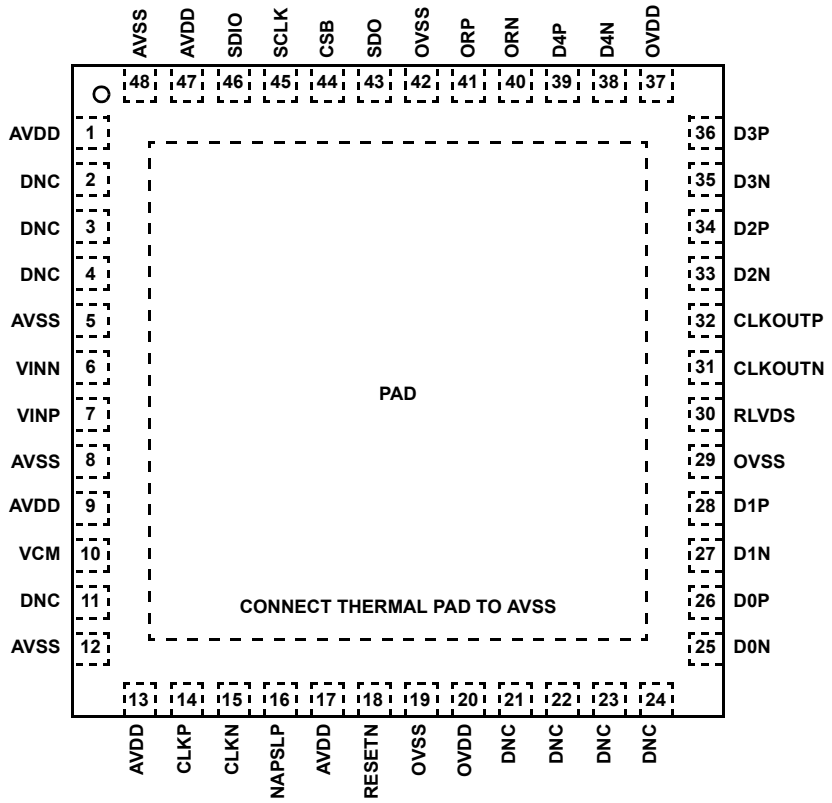

Pin Descriptions

PIN NUMBER	LVDS [LVCMOS] NAME	LVDS [LVCMOS] FUNCTION
1, 9, 13, 17, 47	AVDD	1.8V Analog Supply
2, 3, 4, 11, 21, 22, 23, 24	DNC	Do Not Connect
5, 8, 12, 48	AVSS	Analog Ground
6, 7	VINN, VINP	Analog Input Negative, Positive
10	VCM	Common-Mode Output
14, 15	CLKP, CLKN	Clock Input True, Complement
16	NAPSLP	Tri-Level Power Control (Nap, Sleep modes)
18	RESETN	Power-On Reset (Active Low, see page 16)
19, 29, 42	OVSS	Output Ground
20, 37	OVDD	1.8V Output Supply
25	D0N [NC]	LVDS DDR Logical Bits 1, 0 Output Complement [NC in LVCMOS]
26	D0P [D0]	LVDS DDR Logical Bits 1, 0 Output True [CMOS DDR Logical Bits 1, 0 in LVCMOS]
27	D1N [NC]	LVDS DDR Logical Bits 3, 2 Output Complement [NC in LVCMOS]
28	D1P [D1]	LVDS DDR Logical Bits 3, 2 Output True [CMOS DDR Logical Bits 3, 2 in LVCMOS]
30	RLVDS	LVDS Bias Resistor (Connect to OVSS with a 10kΩ, 1% resistor)
31	CLKOUTN [NC]	LVDS Clock Output Complement [NC in LVCMOS]
32	CLKOUTP [CLKOUT]	LVDS Clock Output True [LVCMOS CLKOUT]
33	D2N [NC]	LVDS DDR Logical Bits 5, 4 Output Complement [NC in LVCMOS]
34	D2P [D2]	LVDS DDR Logical Bits 5, 4 Output True [CMOS DDR Logical Bits 5, 4 in LVCMOS]
35	D3N [NC]	LVDS DDR Logical Bits 7, 6 Output Complement [NC in LVCMOS]
36	D3P [D3]	LVDS DDR Logical Bits 7, 6 Output True [CMOS DDR Logical Bits 7, 6 in LVCMOS]
38	D4N [NC]	LVDS DDR Logical Bits 9, 8 Output Complement [NC in LVCMOS]
39	D4P [D4]	LVDS DDR Logical Bits 9, 8 Output True [CMOS DDR Logical Bits 9, 8 in LVCMOS]
40	ORN [NC]	LVDS Over-Range Complement [NC in LVCMOS]
41	ORP [OR]	LVDS Over-Range True [LVCMOS Over-Range]
43	SDO	SPI Serial Data Output **(4.7kΩ pull-up to OVDD is required)**
44	CSB	SPI Chip Select (active low)
45	SCLK	SPI Clock
46	SDIO	SPI Serial Data Input/Output
PAD (Exposed Paddle)	AVSS	Analog Ground (Connect to a low thermal impedance analog ground plane with multiple vias)

NOTE: LVCMOS output mode functionality is shown in brackets (NC = No Connection).

Ordering Information

PART NUMBER (Notes 1, 2)	PART MARKING	SPEED (MSPS)	TEMP. RANGE (°C)	PACKAGE (RoHS Compliant)	PKG. DWG. #
KAD5510P-25Q48	KAD5510P-25 Q48EP-I	250	-40 to +85	48 Ld QFN	L48.7x7E
KAD5510P-21Q48	KAD5510P-21 Q48EP-I	210	-40 to +85	48 Ld QFN	L48.7x7E
KAD5510P-17Q48	KAD5510P-17 Q48EP-I	170	-40 to +85	48 Ld QFN	L48.7x7E
KAD5510P-12Q48	KAD5510P-12 Q48EP-I	125	-40 to +85	48 Ld QFN	L48.7x7E

NOTES:

1. These Intersil Pb-free plastic packaged products employ special Pb-free material sets, molding compounds/die attach materials, and 100% matte tin plate plus anneal (e3 termination finish, which is RoHS compliant and compatible with both SnPb and Pb-free soldering operations). Intersil Pb-free products are MSL classified at Pb-free peak reflow temperatures that meet or exceed the Pb-free requirements of IPC/JEDEC J STD-020.
2. For Moisture Sensitivity Level (MSL), please see device information page for KAD5510P-12, KAD5510P-17, KAD5510P-21, KAD5510P-25. For more information on MSL please see techbrief TB363.

Absolute Maximum Ratings

AVDD to AVSS . . . . . -0.4V to 2.1V
OVDD to OVSS . . . . . -0.4V to 2.1V
AVSS to OVSS . . . . . -0.3V to 0.3V
Analog Inputs to AVSS . . . . . -0.4V to AVDD + 0.3V
Clock Inputs to AVSS . . . . . -0.4V to AVDD + 0.3V
Logic Input to AVSS . . . . . -0.4V to OVDD + 0.3V
Logic Inputs to OVSS . . . . . -0.4V to OVDD + 0.3V

Thermal Information

Thermal Resistance (Typical)	θ_{JA} (°C/W)	θ_{JC} (°C/W)
48 Ld QFN (Notes 3, 4)	25	0.5

Storage Temperature . . . . . -65°C to +150°C
Junction Temperature . . . . . +150°C
Pb-Free Reflow Profile . . . . . see TB493

Recommended Operating Conditions

AVDD 1.8V
OVDD 1.8V
Temperature . . . . . -40°C to +85°C

CAUTION: Do not operate at or near the maximum ratings listed for extended periods of time. Exposure to such conditions may adversely impact product reliability and result in failures not covered by warranty.

NOTES:

3. θ_{JA} is measured in free air with the component mounted on a high effective thermal conductivity test board with "direct attach" features. See Tech Brief TB379.
4. For θ_{JC}, the "case temp" location is the center of the exposed metal pad on the package underside.

Electrical Specifications

All specifications apply under the following conditions unless otherwise noted: AVDD = 1.8V, OVDD = 1.8V, T_A = -40°C to +85°C (typical specifications at +25°C), A_{IN} = -1dBFS, f_{SAMPLE} = Maximum Conversion Rate (per speed grade). **Boldface limits apply across the operating temperature range, -40°C to +85°C.**

PARAMETER	SYMBOL	TEST CONDITIONS	KAD5510P-25			KAD5510P-21			KAD5510P-17			KAD5510P-12			UNIT
			MIN	TYP	MAX	MIN	TYP	MAX	MIN	TYP	MAX	MIN	TYP	MAX	
DC SPECIFICATIONS															
Analog Input															
Full-Scale Analog Input Range	V_{FS}	Differential	**1.40**	1.47	**1.54**	**1.40**	1.47	**1.54**	**1.40**	1.47	**1.54**	**1.40**	1.47	**1.54**	V_{P-P}
Input Resistance	R_{IN}	Differential		1000			1000			1000			1000		Ω
Input Capacitance	C_{IN}	Differential		1.8			1.8			1.8			1.8		pF
Full Scale Range Temp. Drift	A_{VTC}	Full temperature		90			90			90			90		ppm/°C
Input Offset Voltage	V_{OS}		**-10**	±2	**10**	**-10**	±2	**10**	**-10**	±2	**10**	**-10**	±2	**10**	mV
Gain Error	E_G			±0.6			±0.6			±0.6			±0.6		%
Common-Mode Output Voltage	V_{CM}		**435**	535	**635**	**435**	535	**635**	**435**	535	**635**	**435**	535	**635**	mV
Common-Mode Input Current (per pin)	I_{CM}			2.5			2.5			2.5			2.5		µA/MSPS
Clock Inputs															
Input Common-Mode Voltage				0.9			0.9			0.9			0.9		V
CLKP,CLKN Input Swing				1.8			1.8			1.8			1.8		V
Power Requirements															
1.8V Analog Supply Voltage	AVDD		**1.7**	1.8	**1.9**	**1.7**	1.8	**1.9**	**1.7**	1.8	**1.9**	**1.7**	1.8	**1.9**	V
1.8V Digital Supply Voltage	OVDD		**1.7**	1.8	**1.9**	**1.7**	1.8	**1.9**	**1.7**	1.8	**1.9**	**1.7**	1.8	**1.9**	V

Electrical Specifications

All specifications apply under the following conditions unless otherwise noted: AVDD = 1.8V, OVDD = 1.8V, T_A = -40°C to +85°C (typical specifications at +25°C), A_{IN} = -1dBFS, f_{SAMPLE} = Maximum Conversion Rate (per speed grade). **Boldface limits apply across the operating temperature range, -40°C to +85°C. (Continued)**

PARAMETER	SYMBOL	TEST CONDITIONS	KAD5510P-25			KAD5510P-21			KAD5510P-17			KAD5510P-12			UNIT
			MIN	TYP	MAX	MIN	TYP	MAX	MIN	TYP	MAX	MIN	TYP	MAX	
1.8V Analog Supply Current	I_{AVDD}			90	**101.5**		83	**94.5**		77	**87.5**		69	**79.5**	mA
1.8V Digital Supply Current (DDR) (Note 5)	I_{OVDD}	3mA LVDS		39	**45**		38	**45**		36	**40**		35	**40**	mA
Power Supply Rejection Ratio	PSRR	30MHz, 200mV$_{P-P}$ signal on AVDD		-36			-36			-36			-36		dB
Total Power Dissipation															
Normal Mode (DDR)	P_D	3mA LVDS		234	**254**		219	**242**		204	**220**		189	**205**	mW
Nap Mode	P_D			84	**104**		80	**100**		78	**97**		74	**93**	mW
Sleep Mode	P_D	CSB at logic high		2	**6**		2	**6**		2	**6**		2	**6**	mW
Nap Mode Wakeup Time (Note 6)		Sample Clock Running		1			1			1			1		µs
Sleep Mode Wakeup Time (Note 6)		Sample Clock Running		1			1			1			1		ms
AC SPECIFICATIONS															
Differential Nonlinearity	DNL		**-0.5**	±0.12	**0.5**	**-0.5**	±0.17	**0.5**	**-0.5**	±0.17	**0.5**	**-0.5**	±0.17	**0.5**	LSB
Integral Nonlinearity	INL		**-0.75**	±0.2	**0.75**	**-0.75**	±0.3	**0.75**	**-0.75**	±0.3	**0.75**	**-0.75**	±0.3	**0.75**	LSB
Minimum Conversion Rate (Note 7)	f_S MIN				**40**			**40**			**40**			**40**	MSPS
Maximum Conversion Rate	f_S MAX		**250**			**210**			**170**			**125**			MSPS
Signal-to-Noise Ratio	SNR	f_{IN} = 10MHz		60.8			60.8			61.0			61.0		dBFS
		f_{IN} = 105MHz	**59.5**	60.7		**60.0**	60.9		**60.2**	61.0		**60.2**	61.0		dBFS
		f_{IN} = 190MHz		60.6			60.8			60.9			60.9		dBFS
		f_{IN} = 364MHz		60.5			60.6			60.7			60.7		dBFS
		f_{IN} = 695MHz		59.9			60.0			60.1			60.0		dBFS
		f_{IN} = 995MHz		59.1			59.2			59.3			59.2		dBFS
Signal-to-Noise and Distortion	SINAD	f_{IN} = 10MHz		60.7			60.8			60.9			61.0		dBFS
		f_{IN} = 105MHz	**59.3**	60.7		**59.9**	60.9		**60.0**	60.9		**60.0**	61.0		dBFS
		f_{IN} = 190MHz		60.5			60.8			60.8			60.9		dBFS
		f_{IN} = 364MHz		60.4			60.5			60.6			60.4		dBFS
		f_{IN} = 695MHz		56.5			57.3			56.9			56.6		dBFS
		f_{IN} = 995MHz		49.8			46.9			47.7			49.1		dBFS

Electrical Specifications All specifications apply under the following conditions unless otherwise noted: AVDD = 1.8V, OVDD = 1.8V, T_A = -40°C to +85°C (typical specifications at +25°C), A_{IN} = -1dBFS, f_{SAMPLE} = Maximum Conversion Rate (per speed grade). **Boldface limits apply across the operating temperature range, -40°C to +85°C. (Continued)**

PARAMETER	SYMBOL	TEST CONDITIONS	KAD5510P-25			KAD5510P-21			KAD5510P-17			KAD5510P-12			UNIT
			MIN	TYP	MAX	MIN	TYP	MAX	MIN	TYP	MAX	MIN	TYP	MAX	
Effective Number of Bits	ENOB	f_{IN} = 10MHz		9.8			9.8			9.8			9.8		Bits
		f_{IN} = 105MHz	**9.5**	9.8		**9.6**	9.8		**9.6**	9.8		**9.6**	9.8		Bits
		f_{IN} = 190MHz		9.8			9.8			9.8			9.8		Bits
		f_{IN} = 364MHz		9.7			9.8			9.8			9.7		Bits
		f_{IN} = 695MHz		9.1			9.2			9.2			9.1		Bits
		f_{IN} = 995MHz		8.0			7.5			7.6			7.9		Bits
Spurious-Free Dynamic Range	SFDR	f_{IN} = 10MHz		83.0			82.0			78.0			79.0		dBc
		f_{IN} = 105MHz	**73.0**	86.1		**73.0**	86.6		**73.0**	84.6		**73.0**	85.8		dBc
		f_{IN} = 190MHz		78.0			80.1			81.0			81.2		dBc
		f_{IN} = 364MHz		76.2			77.1			77.9			72.1		dBc
		f_{IN} = 695MHz		60.8			61.9			61.0			61.1		dBc
		f_{IN} = 995MHz		50.2			47.2			47.9			49.4		dBc
Intermodulation Distortion	IMD	f_{IN} = 70MHz		-86.1			-92.1			-94.5			-95.1		dBFS
		f_{IN} = 170MHz		-96.9			-87.1			-91.6			-85.7		dBFS
Word Error Rate	WER			10^{-12}			10^{-12}			10^{-12}			10^{-12}		
Full Power Bandwidth	FPBW			1.5			1.5			1.5			1.5		GHz

NOTES:

5. Digital Supply Current is dependent upon the capacitive loading of the digital outputs. IOVDD specifications apply for 10pF load on each digital output.
6. See "Nap/Sleep" on page 18 for more details.
7. The DLL Range setting must be changed for low speed operation. See "Serial Peripheral Interface" on page 21 for more detail.

Digital Specifications

Boldface limits apply across the operating temperature range, -40°C to +85°C.

PARAMETER	SYMBOL	CONDITIONS	MIN	TYP	MAX	UNIT
INPUTS						
Input Current High (SDIO, RESETN, CSB, SCLK)	I_{IH}	V_{IN} = 1.8V	**0**	1	**10**	µA
Input Current Low (SDIO, RESETN, CSB, SCLK)	I_{IL}	V_{IN} = 0V	**-25**	-12	**-5**	µA
Input Voltage High (SDIO, RESETN, CSB, SCLK)	V_{IH}		**1.17**			V
Input Voltage Low (SDIO, RESETN, CSB, SCLK)	V_{IL}				**0.63**	V
Input Current High (NAPSLP) (Note 9)	I_{IH}		**15**	25	**40**	µA
Input Current Low (NAPSLP)	I_{IL}		**-40**	25	**-15**	µA
Input Capacitance	C_{DI}			3		pF
LVDS OUTPUTS						
Differential Output Voltage	V_T	3mA Mode		620		mV_{P-P}
Output Offset Voltage	V_{OS}	3mA Mode	**950**	965	**980**	mV
Output Rise Time	t_R			500		ps
Output Fall Time	t_F			500		ps
CMOS OUTPUTS						
Voltage Output High	V_{OH}	I_{OH} = -500µA	**OVDD - 0.3**	OVDD - 0.1		V
Voltage Output Low	V_{OL}	I_{OL} = 1mA		0.1	**0.3**	V
Output Rise Time	t_R			1.8		ns
Output Fall Time	t_F			1.4		ns

Timing Diagrams

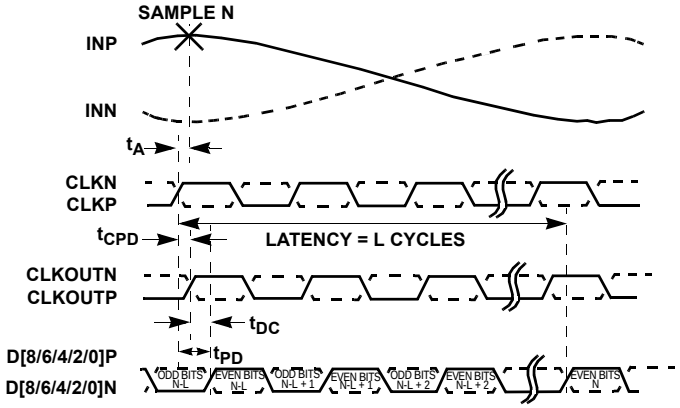

FIGURE 3. DDR LVDS TIMING DIAGRAM (See "Digital Outputs" on page 18)

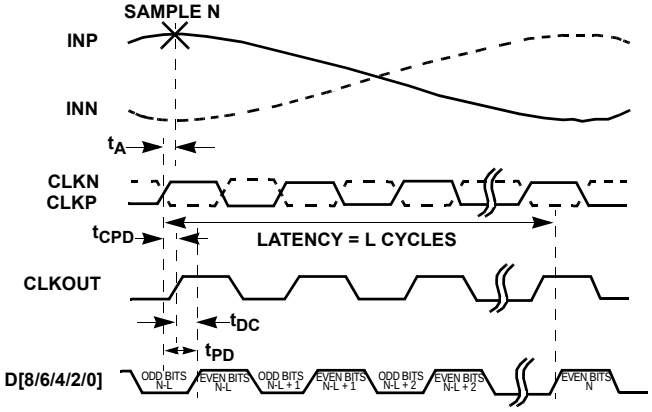

FIGURE 4. DDR CMOS TIMING DIAGRAM (See "Digital Outputs" on page 18)

Switching Specifications

Boldface limits apply across the operating temperature range, -40°C to +85°C.

PARAMETER	TEST CONDITIONS	SYMBOL	MIN (Note 8)	TYP	MAX (Note 8)	UNIT
ADC OUTPUT						
Aperture Delay		t_A		375		ps
RMS Aperture Jitter		j_A		60		fs
Output Clock to Data Propagation Delay, LVDS Mode (Note 10)	DDR Rising Edge	t_{DC}	**-260**	-50	**120**	ps
	DDR Falling Edge	t_{DC}	**-160**	10	**230**	ps
	SDR Falling Edge	t_{DC}	**-260**	-40	**230**	ps
Output Clock to Data Propagation Delay, CMOS Mode (Note 10)	DDR Rising Edge	t_{DC}	**-220**	-10	**200**	ps
	DDR Falling Edge	t_{DC}	**-310**	-90	**110**	ps
	SDR Falling Edge	t_{DC}	**-310**	-50	**200**	ps
Latency (Pipeline Delay)		L		7.5		cycles
Overvoltage Recovery		t_{OVR}		1		cycles
SPI INTERFACE (Notes 11, 12)						
SCLK Period	Write Operation	t_{CLK}	**16**			cycles (Note 11)
	Read Operation	t_{CLK}	**66**			cycles
SCLK Duty Cycle (t_{HI}/t_{CLK} or t_{LO}/t_{CLK})	Read or Write		**25**	50	**75**	%
CSB↓ to SCLK↑ Set-Up Time	Read or Write	t_S	**1**			cycles
CSB↑ after SCLK↑ Hold Time	Read or Write	t_H	**3**			cycles
Data Valid to SCLK↑ Set-Up Time	Write	t_{DSW}	**1**			cycles
Data Valid after SCLK↑ Hold Time	Write	t_{DHW}	**3**			cycles
Data Valid after SCLK↓ Time	Read	t_{DVR}			**16.5**	cycles
Data Invalid after SCLK↑ Time	Read	t_{DHR}	**3**			cycles
Sleep Mode CSB↓ to SCLK↑ Set-Up Time (Note 13)	Read or Write in Sleep Mode	t_S	**150**			µs

NOTES:

8. Compliance to datasheet limits is assured by one or more methods: production test, characterization and/or design.
9. The Tri-Level Inputs internal switching thresholds are approximately 0.43V and 1.34V. It is advised to float the inputs, tie to ground or AVDD depending on desired function.
10. The input clock to output clock delay is a function of sample rate, using the output clock to latch the data simplifies data capture for most applications. Contact factory for more info if needed.
11. SPI Interface timing is directly proportional to the ADC sample period (4ns at 250Msps).
12. The SPI may operate asynchronously with respect to the ADC sample clock but the ADC sample clock must be active to access SPI registers.
13. The CSB set-up time increases in sleep mode due to the reduced power state, CSB setup time in Nap mode is equal to normal mode CSB set-up time (4ns min).

Typical Performance Curves

All Typical Performance Characteristics apply under the following conditions unless otherwise noted: AVDD = OVDD = 1.8V, T_A = +25°C, A_{IN} = -1dBFS, f_{IN} = 105MHz, f_{SAMPLE} = Maximum conversion rate (per speed grade).

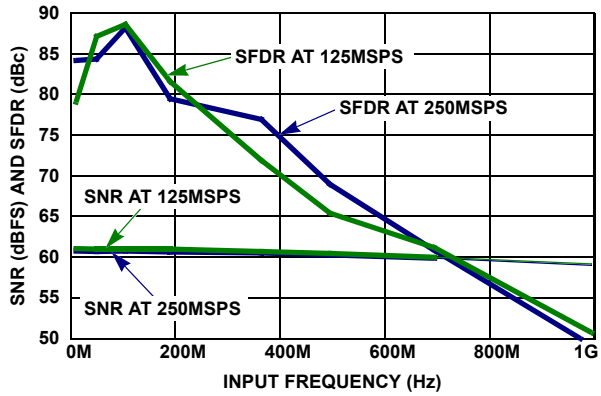

FIGURE 5. SNR AND SFDR vs f_{IN}

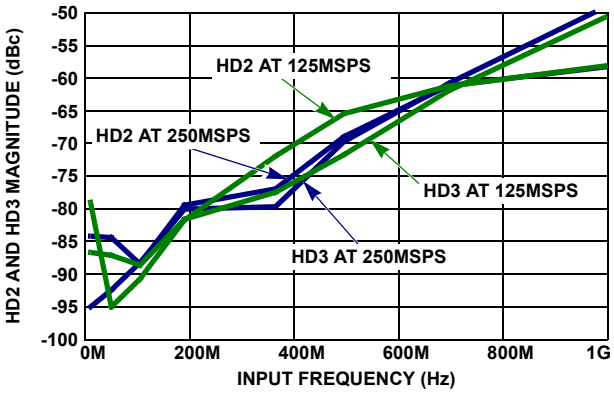

FIGURE 6. HD2 AND HD3 vs f_{IN}

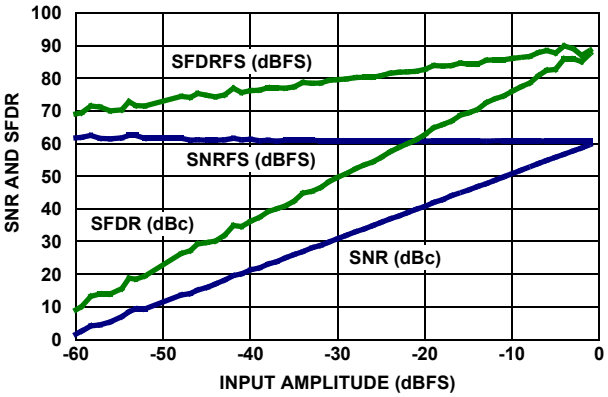

FIGURE 7. SNR AND SFDR vs A_{IN}

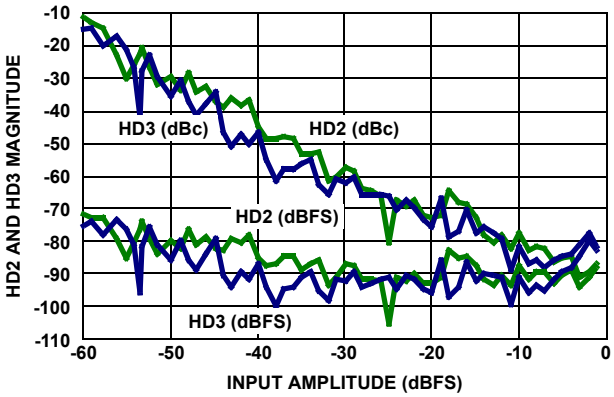

FIGURE 8. HD2 AND HD3 vs A_{IN}

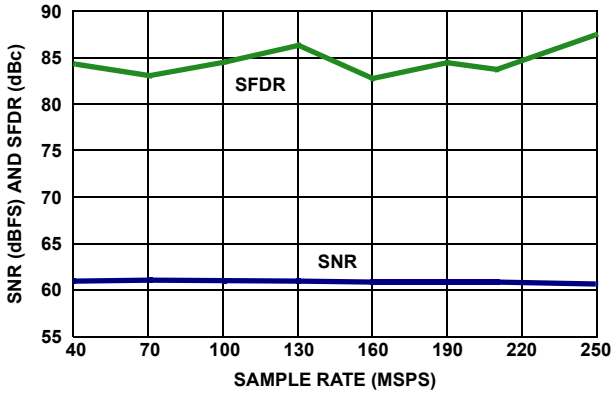

FIGURE 9. SNR AND SFDR vs f_{SAMPLE}

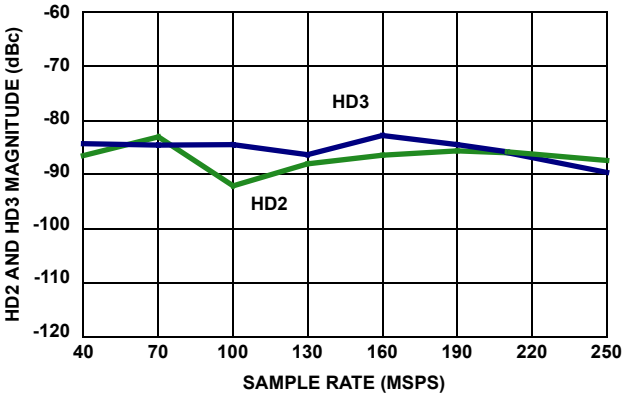

FIGURE 10. HD2 AND HD3 vs f_{SAMPLE}

Typical Performance Curves

All Typical Performance Characteristics apply under the following conditions unless otherwise noted: AVDD = OVDD = 1.8V, T_A = +25°C, A_{IN} = -1dBFS, f_{IN} = 105MHz, f_{SAMPLE} = Maximum conversion rate (per speed grade).

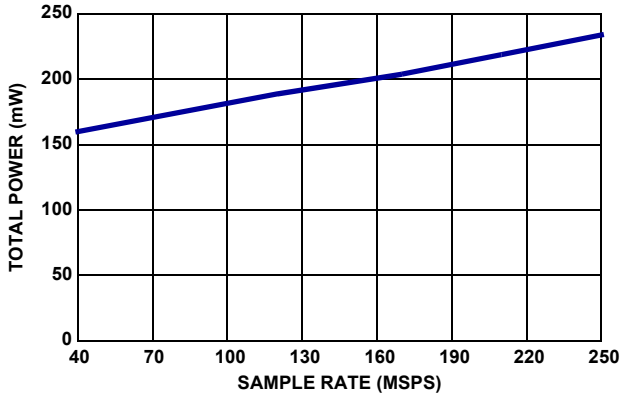

FIGURE 11. POWER vs f_{SAMPLE} IN 3mA LVDS MODE

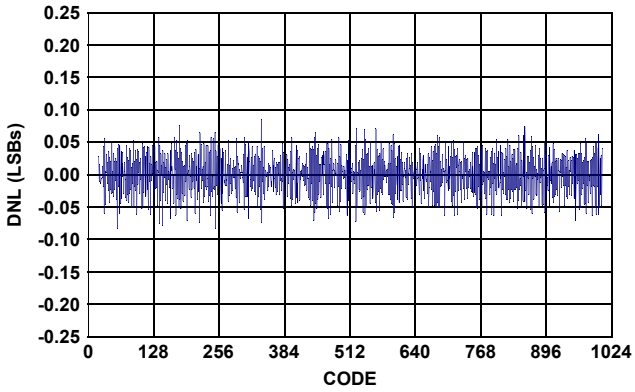

FIGURE 12. DIFFERENTIAL NONLINEARITY

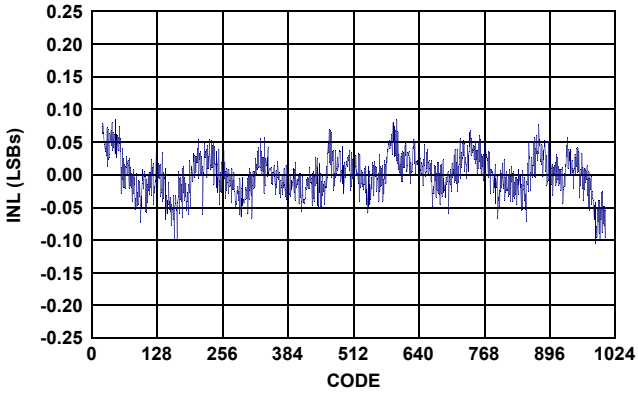

FIGURE 13. INTEGRAL NONLINEARITY

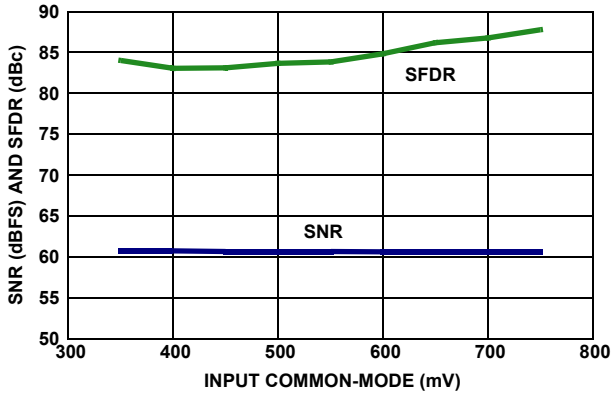

FIGURE 14. SNR AND SFDR vs VCM

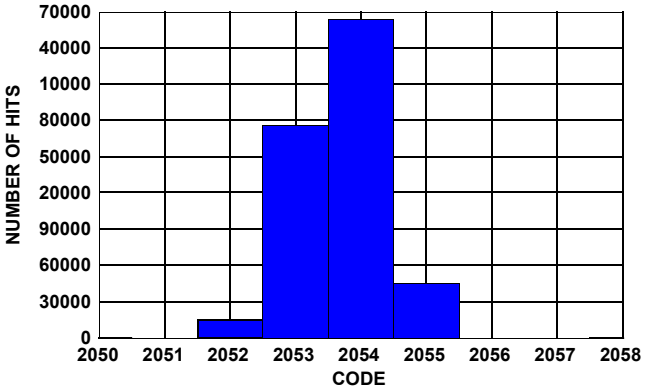

FIGURE 15. NOISE HISTOGRAM

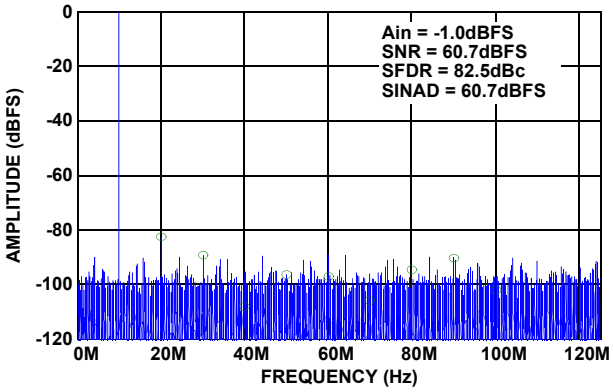

FIGURE 16. SINGLE-TONE SPECTRUM AT 10MHz

Typical Performance Curves

All Typical Performance Characteristics apply under the following conditions unless otherwise noted: AVDD = OVDD = 1.8V, T_A = +25°C, A_{IN} = -1dBFS, f_{IN} = 105MHz, f_{SAMPLE} = Maximum conversion rate (per speed grade).

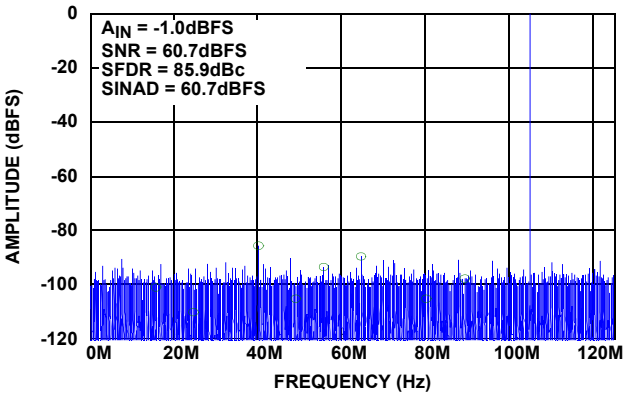

FIGURE 17. SINGLE-TONE SPECTRUM AT 105MHz

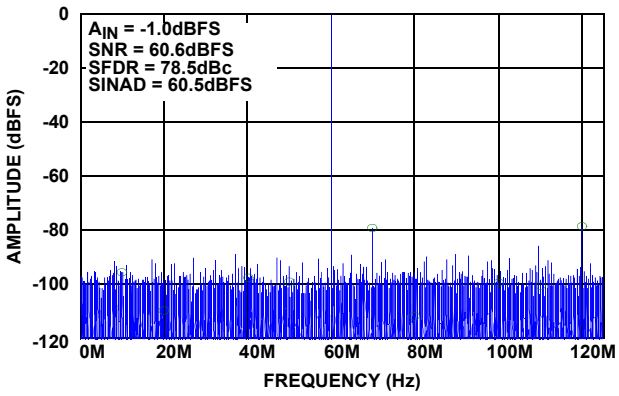

FIGURE 18. SINGLE-TONE SPECTRUM AT 190MHz

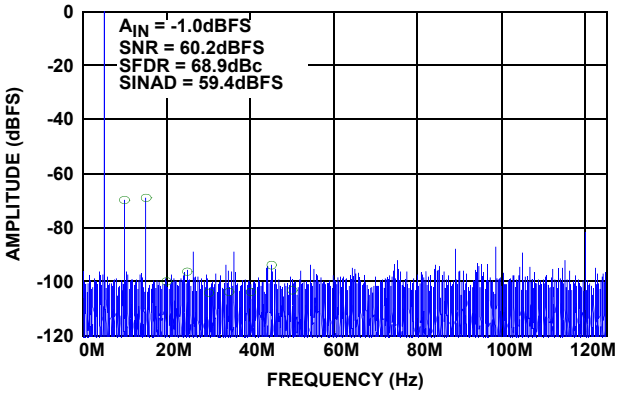

FIGURE 19. SINGLE-TONE SPECTRUM AT 495MHz

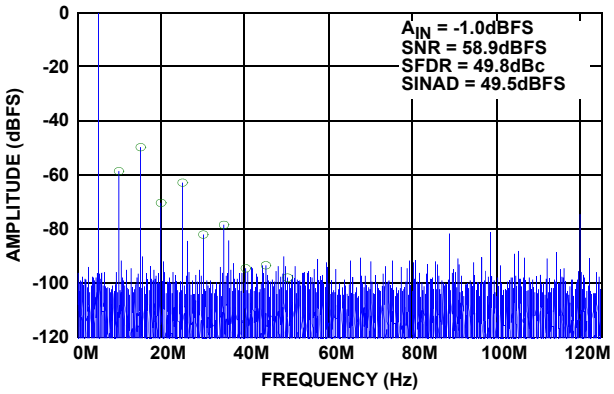

FIGURE 20. SINGLE-TONE SPECTRUM AT 995MHz

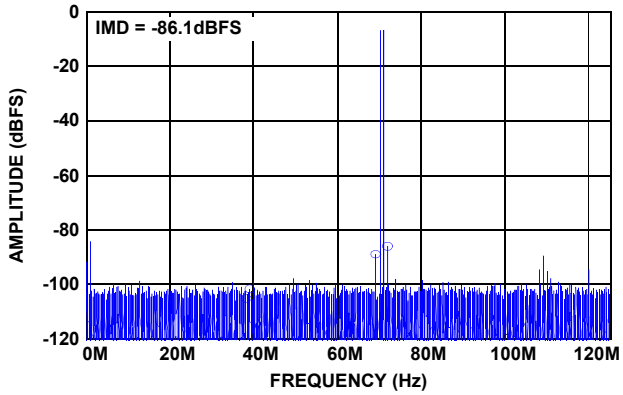

FIGURE 21. TWO-TONE SPECTRUM AT 70MHz

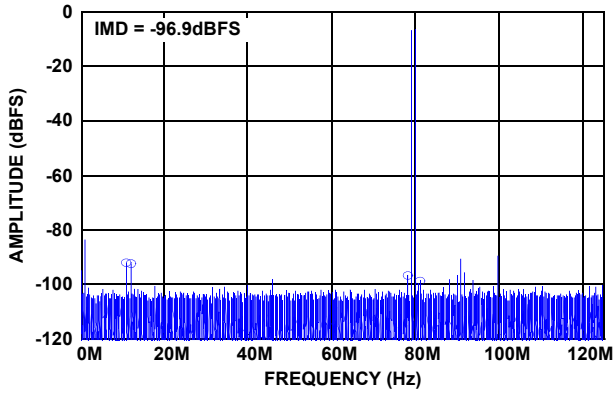

FIGURE 22. TWO-TONE SPECTRUM AT 170MHz

Theory of Operation

Functional Description

The KAD5510P is based upon a 10-bit, 250MSPS A/D converter core that utilizes a pipelined successive approximation architecture (Figure 23). The input voltage is captured by a Sample-Hold Amplifier (SHA) and converted to a unit of charge. Proprietary charge-domain techniques are used to successively compare the input to a series of reference charges. Decisions made during the successive approximation operations determine the digital code for each input value. The converter pipeline requires six samples to produce a result. Digital error correction is also applied, resulting in a total latency of seven and one half clock cycles. This is evident to the user as a time lag between the start of a conversion and the data being available on the digital outputs.

Power-On Calibration

The ADC performs a self-calibration at start-up. An internal Power-On Reset (POR) circuit detects the supply voltage ramps and initiates the calibration when the analog and digital supply voltages are above a threshold. The following conditions must be adhered to for the power-on calibration to execute successfully:

- A frequency-stable conversion clock must be applied to the CLKP/CLKN pins
- DNC pins must not be pulled up or down
- SDO must be high
- RESETN will be pulled low by the ADC during POR then released
- SPI communications must not be attempted

A user-initiated reset can subsequently be invoked in the event that the previously mentioned conditions cannot be met at power-up.

The SDO pin requires an external 4.7kΩ pull-up to OVDD. If the SDO pin is pulled low externally during power-up, calibration will not be executed properly.

After the power supply has stabilized, the internal POR releases RESETN and an internal pull-up pulls it high starting the calibration sequence. When the RESETN pin is driven by external logic, it should be connected to an open-drain output with open-state leakage of less than 0.5mA to assure exit from the reset state. A driver that can be switched from logic LOW to HIGH impedance can also be used to drive RESETN provided the high impedance state leakage is less than 0.5mA and the logic voltages are the same.

The calibration sequence is initiated on the rising edge of RESETN, as shown in Figure 24 on page 16. The Over-Range output (OR) is set high once RESETN is pulled low and remains in that state until calibration is complete. The OR output returns to normal operation at that time, so it is important that the analog input be within the converter's full-scale range to observe the transition. If the input is in an over-range condition, the OR pin will stay high and it will not be possible to detect the end of the calibration cycle.

While RESETN is low, the output clock (CLKOUTP/CLKOUTN) is set low. Normal operation of the output clock resumes at the next input clock edge (CLKP/CLKN) after RESETN is deasserted. At 250MSPS the nominal calibration time is 200ms, while the maximum calibration time is 550ms.

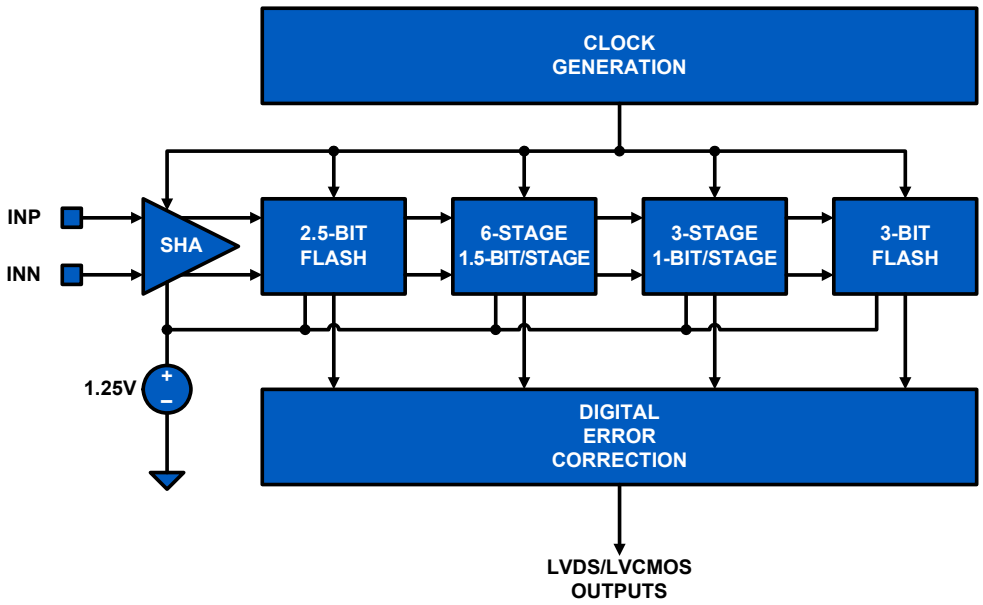

FIGURE 23. ADC CORE BLOCK DIAGRAM

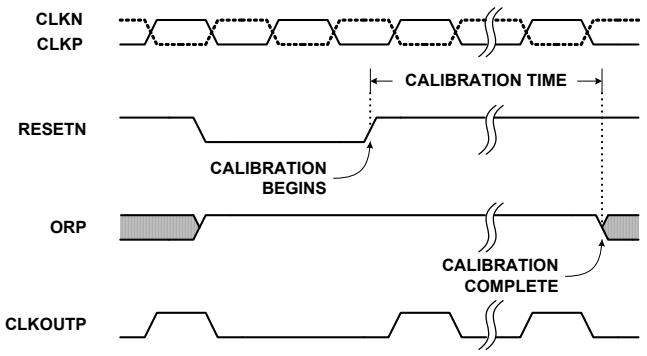

FIGURE 24. CALIBRATION TIMING

User-Initiated Reset

Recalibration of the ADC can be initiated at any time by driving the RESETN pin low for a minimum of one clock cycle. An open-drain driver with less than 0.5mA open-state leakage is recommended so the internal high impedance pull-up to OVDD can assure exit from the reset state. As is the case during power-on reset, the SDO, RESETN and DNC pins must be in the proper state for the calibration to successfully execute.

The performance of the KAD5510P changes with variations in temperature, supply voltage, or sample rate. The extent of these changes may necessitate recalibration, depending on system performance requirements. Best performance will be achieved by recalibrating the ADC under the environmental conditions at which it will operate.

A supply voltage variation of less than 100mV will generally result in an SNR change of less than 0.5dBFS and SFDR change of less than 3dBc.

In situations where the sample rate is not constant, best results will be obtained if the device is calibrated at the highest sample rate. Reducing the sample rate by less than 75MSPS will typically result in an SNR change of less than 0.5dBFS and an SFDR change of less than 3dBc.

Figures 25 and 26 show the effect of temperature on SNR and SFDR performance with calibration performed at -40°C, +25°C, and +85°C. Each plot shows the variation of SNR/SFDR across temperature after a single calibration at -40°C, +25°C and +85°C. Best performance is typically achieved by a user-initiated calibration at the operating conditions, as stated earlier. However, it can be seen that performance drift with temperature is not a very strong function of the temperature at which the calibration is performed. Full rated performance will be achieved after power-up calibration regardless of the operating conditions.

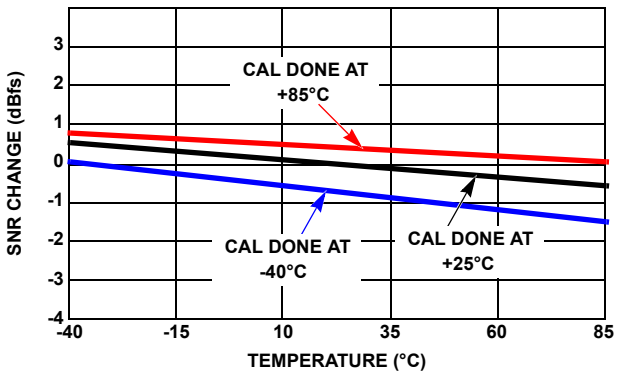

FIGURE 25. SNR PERFORMANCE vs TEMPERATURE

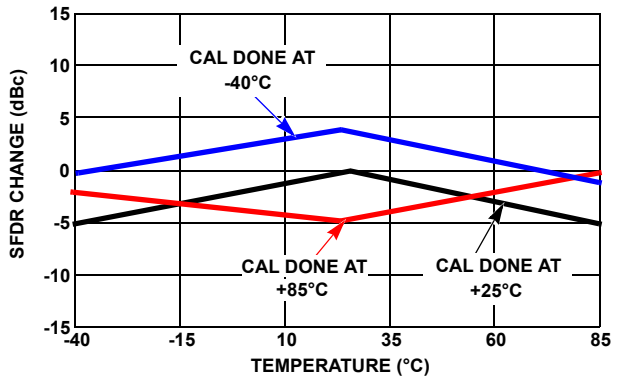

FIGURE 26. SFDR PERFORMANCE vs TEMPERATURE

Analog Input

The ADC core contains a fully differential input (VINP/VINN) to the sample and hold amplifier (SHA). The ideal full-scale input voltage is 1.45V, centered at the VCM voltage of 0.535V as shown in Figure 27.

Best performance is obtained when the analog inputs are driven differentially. The common-mode output voltage, VCM, should be used to properly bias the inputs as shown in Figures 28 through 30. An RF transformer will give the best noise and distortion performance for wideband and/or high intermediate frequency (IF) inputs. Two different transformer input schemes are shown in Figures 28 and 29.

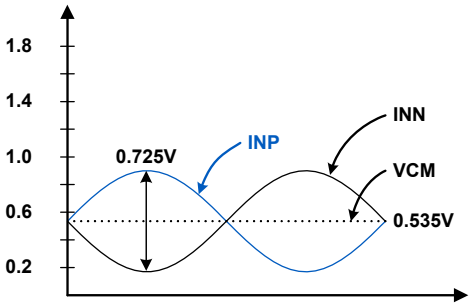

FIGURE 27. ANALOG INPUT RANGE

This dual transformer scheme is used to improve common-mode rejection, which keeps the common-mode level of the input matched to VCM. The value of the shunt resistor should be determined based on the desired load impedance. The differential input resistance of the KAD5510P is 1000Ω.

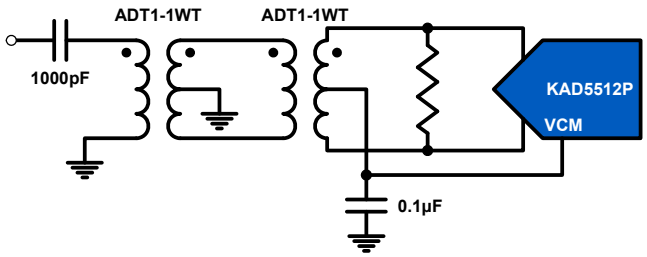

FIGURE 28. TRANSFORMER INPUT FOR GENERAL PURPOSE APPLICATIONS

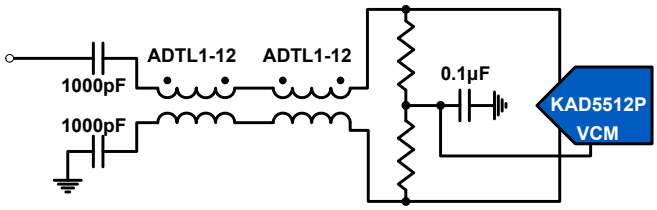

FIGURE 29. TRANSMISSION-LINE TRANSFORMER INPUT FOR HIGH IF APPLICATIONS

The SHA design uses a switched capacitor input stage (see Figure 43 on page 27), which creates current spikes when the sampling capacitance is reconnected to the input voltage. This causes a disturbance at the input, which must settle before the next sampling point. Lower source impedance will result in faster settling and improved performance. Therefore, a 1:1 transformer and low shunt resistance are recommended for optimal performance.

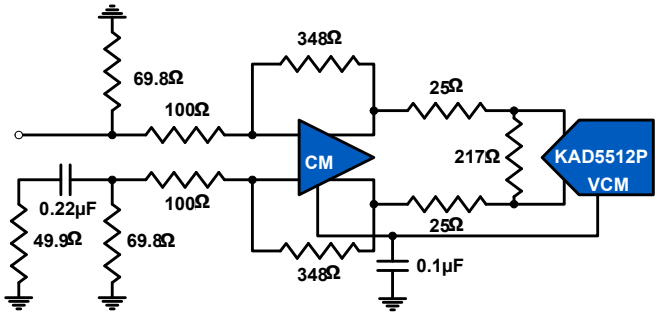

FIGURE 30. DIFFERENTIAL AMPLIFIER INPUT

A differential amplifier, as shown in Figure 30, can be used in applications that require DC-coupling. In this configuration, the amplifier will typically dominate the achievable SNR and distortion performance.

The current spikes from the SHA will try to force the analog input pins toward ground. In cases where the input pins are biased with more than 50Ω in series from VCM, care must be taken to make sure the input common-mode range is not violated. The provided ICM value (250µA/MHz*250MHz = 625µA at 250MSPS) may be used to calculate the expected voltage drop across any series resistance.

VCM Output

The VCM output is buffered with a series output impedance of 20Ω. It can easily drive a typical ADC driver's 10kΩ common-mode control pin. If an external buffer is not used, the voltage drop across the internal 20Ω impedance must be considered when calculating the expected DC bias voltage at the analog input pins.

Clock Input

The clock input circuit is a differential pair (see Figure 44 on page 27). Driving these inputs with a high level (up to $1.8V_{P-P}$ on each input) sine or square wave will provide the lowest jitter performance. A transformer with 4:1 impedance ratio will provide increased drive levels.

The recommended drive circuit is shown in Figure 31. A duty cycle range of 40% to 60% is acceptable. The clock can be driven single-ended, but this will reduce the edge rate and may impact SNR performance. The clock inputs are internally self-biased to AVDD/2 to facilitate AC coupling.

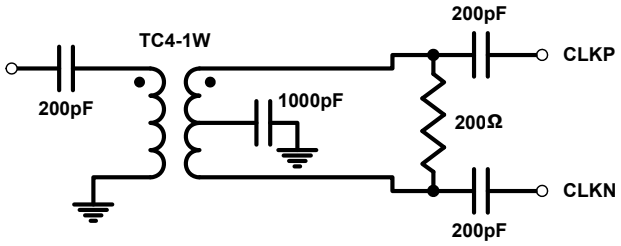

FIGURE 31. RECOMMENDED CLOCK DRIVE

A selectable 2x frequency divider is provided in series with the clock input. The divider can be used in the 2x mode with a sample clock equal to twice the desired sample rate. This allows the use of the Phase Slip feature, which enables synchronization of multiple ADCs.

The clock divider can be controlled through the SPI port. Details on this are contained in "Serial Peripheral Interface" on page 21.

A Delay-Locked Loop (DLL) generates internal clock signals for various stages within the charge pipeline. If the frequency of the input clock changes, the DLL may take up to 52µs to regain lock at 250MSPS. The lock time is inversely proportional to the sample rate.

Jitter

In a sampled data system, clock jitter directly impacts the achievable SNR performance. The theoretical relationship between clock jitter (t_J) and SNR is shown in Equation 1 and is illustrated in Figure 32 on page 18.

$$SNR = 20 \log_{10}\left(\frac{1}{2\pi f_{IN} t_J}\right) \quad \text{(EQ. 1)}$$

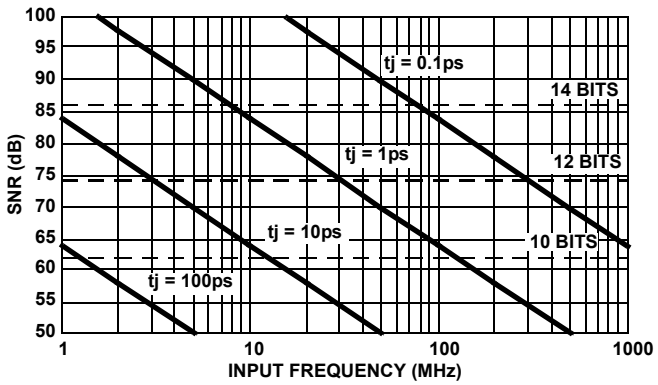

FIGURE 32. SNR vs CLOCK JITTER

This relationship shows the SNR that would be achieved if clock jitter were the only non-ideal factor. In reality, achievable SNR is limited by internal factors such as linearity, aperture jitter and thermal noise. Internal aperture jitter is the uncertainty in the sampling instant shown in Figure 32. The internal aperture jitter combines with the input clock jitter in a root-sum-square fashion, since they are not statistically correlated, and this determines the total jitter in the system. The total jitter, combined with other noise sources, then determines the achievable SNR.

Voltage Reference

A temperature compensated voltage reference provides the reference charges used in the successive approximation operations. The full-scale range of each A/D is proportional to the reference voltage. The voltage reference is internally bypassed and is not accessible to the user.

Digital Outputs

Output data is available as a parallel bus in LVDS-compatible or CMOS Double Data Rate (DDR) modes. When CLKOUT is low the MSB and all odd logical bits are output, while on the high phase the LSB and all even logical bits are presented. Figures 3 and 4 show the timing relationships for LVDS/CMOS DDR modes.

The KAD5510P is only offered in the 48-QFN package with five LVDS data output pin pairs. It only supports outputs in DDR mode.

LVDS output drive current can be set to a nominal 3mA or a power-saving 2mA. The lower current setting can be used in designs where the receiver is in close physical proximity to the ADC. The applicability of this setting is dependent upon the PCB layout, therefore the user should experiment to determine if performance degradation is observed.

The output mode and LVDS drive current are selected via SPI registers. Details are contained in "Serial Peripheral Interface" on page 21.

Care should be taken when using the DDR CMOS outputs at clock rates greater than 200MHz. Series termination resistors close to the ADC should drive short traces with minimum parasitic loading to assure adequate signal integrity.

An external resistor creates the bias for the LVDS drivers. A 10kΩ, 1% resistor must be connected from the RLVDS pin to OVSS.

Over-Range Indicator

The Over-Range (OR) bit is asserted when the output code reaches positive full-scale (e.g. 0xFFF in offset binary mode). The output code does not wrap around during an over-range condition. The OR bit is updated at the sample rate.

Power Dissipation

The power dissipated by the KAD5510P is primarily dependent on the sample rate and the output modes: LVDS vs CMOS and DDR vs SDR. There is a static bias in the analog supply, while the remaining power dissipation is linearly related to the sample rate. The output supply dissipation is approximately constant in LVDS mode, but linearly related to the clock frequency in CMOS mode. Figures 36 and 37 illustrate these relationships.

Nap/Sleep

Portions of the device may be shut down to save power during times when operation of the ADC is not required. Two power saving modes are available: Nap, and Sleep. Nap mode reduces power dissipation to less than 95mW and recovers to normal operation in approximately 1µs. Sleep mode reduces power dissipation to less than 6mW but requires approximately 1ms to recover from a sleep command.

Wake-up time from sleep mode is dependent on the state of CSB; in a typical application CSB would be held high during sleep, requiring a user to wait 150µs maximum after CSB is asserted (brought low) prior to writing '001x' to SPI Register 25. The device would be fully powered up, in normal mode 1ms after this command is written.

Wake-up from Sleep Mode Sequence (CSB high):

- Pull CSB low
- Wait 150µs
- Write '001x' to Register 25
- Wait 1ms until ADC fully powered on

In an application where CSB was kept low in sleep mode, the 150µs CSB setup time is not required as the SPI registers are powered on when CSB is low, the chip power dissipation increases by ~ 15mW in this case. The 1ms wake-up time after the write of a '001x' to register 25 still applies. It is generally recommended to keep CSB high in sleep mode to avoid any unintentional SPI activity on the ADC.

All digital outputs (Data, CLKOUT and OR) are placed in a high impedance state during Nap or Sleep. The input clock should remain running and at a fixed frequency during Nap or Sleep, and CSB should be high. Recovery time from Nap mode will increase if the clock is stopped, since the internal DLL can take up to 52µs to regain lock at 250MSPS.

By default after the device is powered on, the operational state is controlled by the NAPSLP pin as shown in Table 1 on page 19.

TABLE 1. NAPSLP PIN SETTINGS

NAPSLP PIN	MODE
AVSS	Normal
Float	Sleep
AVDD	Nap

The power-down mode can also be controlled through the SPI port, which overrides the NAPSLP pin setting. Details on this are contained in "Serial Peripheral Interface" on page 21. This is an indexed function when controlled from the SPI, but a global function when driven from the pin.

Data Format

Output data can be presented in three formats: two's complement, Gray code and offset binary. The data format can be controlled through the SPI port. Details on this are contained in "Serial Peripheral Interface" on page 21.

Offset binary coding maps the most negative input voltage to code 0x000 (all zeros) and the most positive input to 0xFFF (all ones). Two's complement coding simply complements the MSB of the offset binary representation.

When calculating Gray code the MSB is unchanged. The remaining bits are computed as the XOR of the current bit position and the next most significant bit. Figure 33 shows this operation.

Converting back to offset binary from Gray code must be done recursively, using the result of each bit for the next lower bit as shown in Figure 34.

Mapping of the input voltage to the various data formats is shown in Table 2.

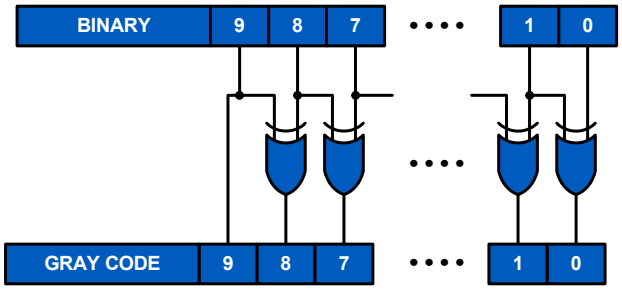

FIGURE 33. BINARY TO GRAY CODE CONVERSION

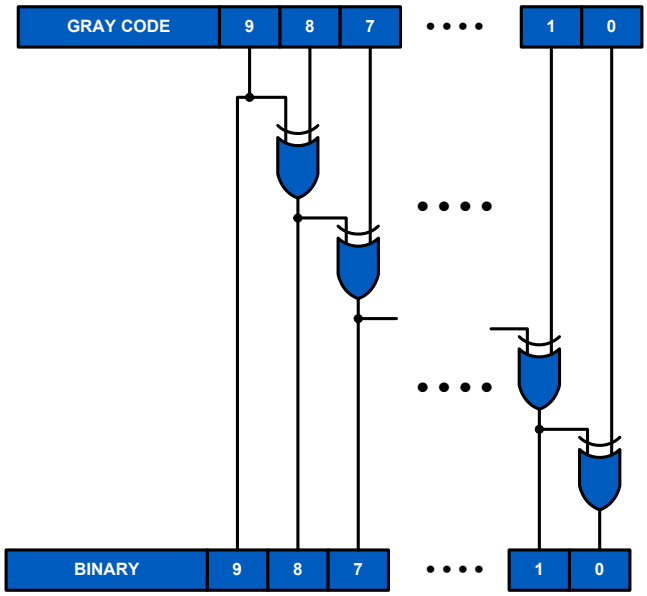

FIGURE 34. GRAY CODE TO BINARY CONVERSION

TABLE 2. INPUT VOLTAGE TO OUTPUT CODE MAPPING

INPUT VOLTAGE	OFFSET BINARY	TWO'S COMPLEMENT	GRAY CODE
–Full Scale	000 00 000 00	100 00 000 00	000 00 000 00
–Full Scale + 1LSB	000 00 000 01	100 00 000 01	000 00 000 01
Mid–Scale	100 00 000 00	000 00 000 00	110 00 000 00
+Full Scale – 1LSB	111 11 111 10	011 11 111 10	100 00 000 01
+Full Scale	111 11 111 11	011 11 111 11	100 00 000 00

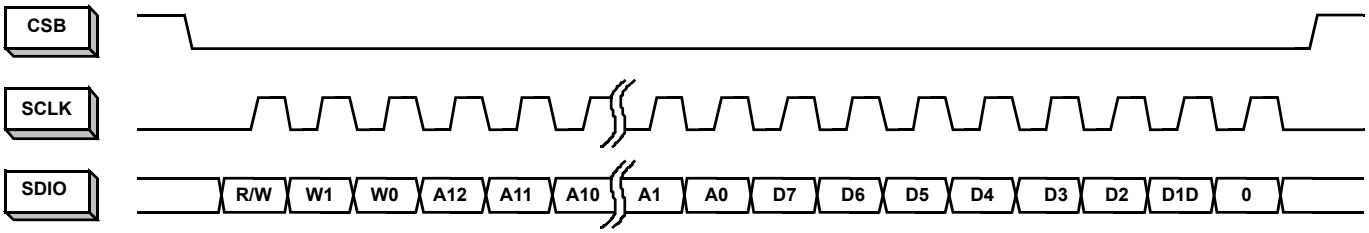

FIGURE 35. MSB-FIRST ADDRESSING

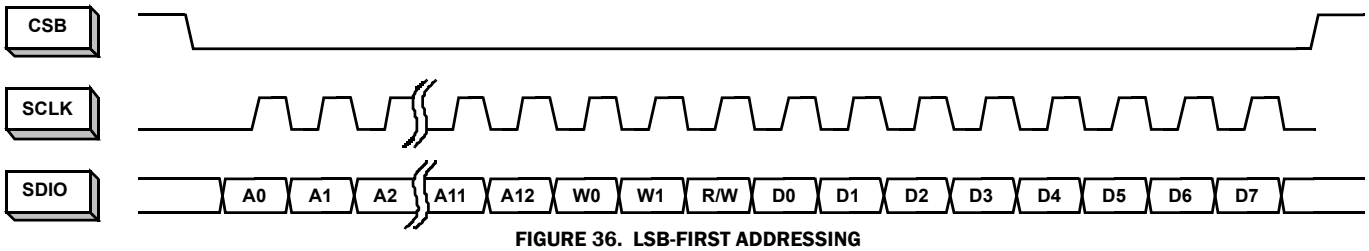

FIGURE 36. LSB-FIRST ADDRESSING

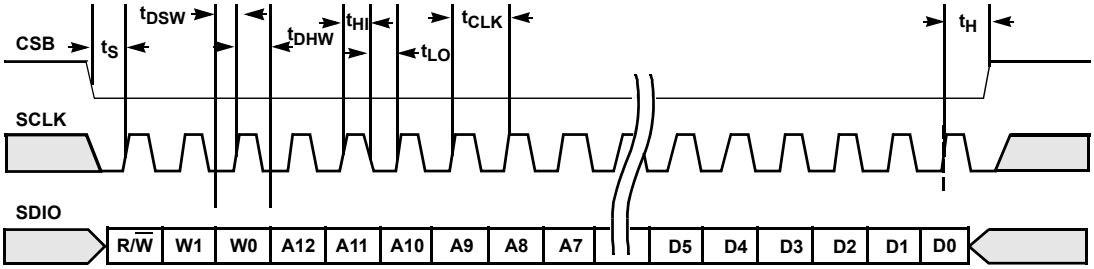

SPI WRITE

FIGURE 37. SPI WRITE

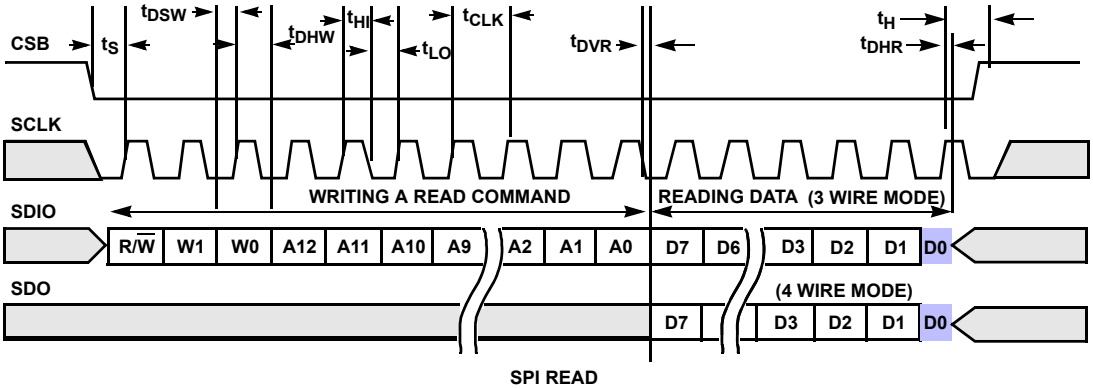

SPI READ

FIGURE 38. SPI READ

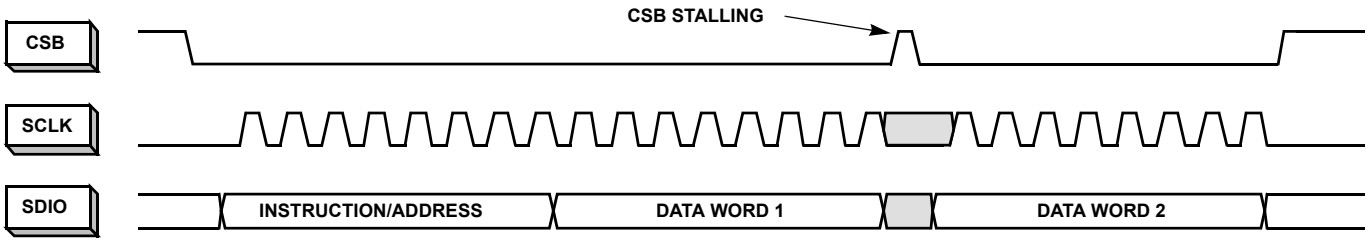

FIGURE 39. 2-BYTE TRANSFER

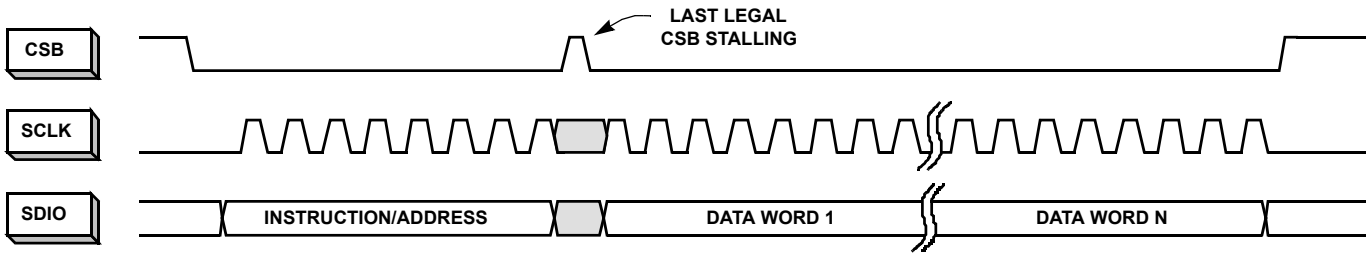

FIGURE 40. N-BYTE TRANSFER

Serial Peripheral Interface

A Serial Peripheral Interface (SPI) bus is used to facilitate configuration of the device and to optimize performance. The SPI bus consists of Chip-Select Bit (CSB), Serial Clock (SCLK) Serial Data Output (SDO) and Serial Data Input/Output (SDIO). The maximum SCLK rate is equal to the ADC sample rate (f_{SAMPLE}) divided by 16 for write operations and f_{SAMPLE} divided by 66 for reads. At f_{SAMPLE} = 250MHz, maximum SCLK is 15.63MHz for writing and 3.79MHz for read operations. There is no minimum SCLK rate but the ADC clock (CLKP/CLKN) must be active to access the SPI registers.

The following sections describe various registers that are used to configure the SPI or adjust performance or functional parameters. Many registers in the available address space (0x00 to 0xFF) are not defined in this document. Additionally, within a defined register there may be certain bits or bit combinations that are reserved. Undefined registers and undefined values within defined registers are reserved and should not be selected. Setting any reserved register or value may produce indeterminate results.

SPI Physical Interface

The serial clock pin (SCLK) provides synchronization for the data transfer. By default, all data is presented on the serial data input/output (SDIO) pin in three-wire mode. The state of the SDIO pin is set automatically in the communication protocol (described in the following). A dedicated serial data output pin (SDO) can be activated by setting 0x00[7] high to allow operation in four-wire mode.

SDO should always be connected to OVDD with a 4.7kΩ resistor even if not used. If the 4.7kΩ resistor is not present the ADC will not exit the reset state.

The SPI port operates in a half duplex master/slave configuration, with the KAD5510P functioning as a slave. Multiple slave devices can interface to a single master in three-wire mode only, since the SDO output of an unaddressed device is asserted in four-wire mode.

The Chip-Select Bar (CSB) pin determines when a slave device is being addressed. Multiple slave devices can be written to concurrently, but only one slave device can be read from at a given time (again, only in three-wire mode). If multiple slave devices are selected for reading at the same time, the results will be indeterminate.

The communication protocol begins with an instruction/address phase. The first rising SCLK edge following a HIGH to LOW transition on CSB determines the beginning of the two-byte instruction/address command; SCLK must be static low before the CSB transition. Data can be presented in MSB-first order or LSB-first order. The default is MSB-first, but this can be changed by setting 0x00[6] high. Figures 35 and 36 show the appropriate bit ordering for the MSB-first and LSB-first modes, respectively. In MSB-first mode the address is incremented for multi-byte transfers, while in LSB-first mode it is decremented.

In the default mode, the MSB is R/W, which determines if the data is to be read (active high) or written. The next two bits, W1 and W0, determine the number of data bytes to be read or written (see Table 3). The lower 13 bits contain the first address for the data transfer. This relationship is illustrated in Figure 37, and timing values are given in "Switching Specifications" on page 11.

After the instruction/address bytes have been read, the appropriate number of data bytes are written to or read from the ADC (based on the R/W bit status). The data transfer will continue as long as CSB remains low and SCLK is active. Stalling of the CSB pin is allowed at any byte boundary (instruction/address or data) if the number of bytes being transferred is three or less. For transfers of four bytes or more, CSB is allowed stall in the middle of the instruction/address bytes or before the first data byte. If CSB transitions to a high state after that point the state machine will reset and terminate the data transfer.

TABLE 3. BYTE TRANSFER SELECTION

[W1:W0]	BYTES TRANSFERRED
00	1
01	2
10	3
11	4 or more

Figures 39 and 40 illustrate the timing relationships for 2-byte and N-byte transfers, respectively. The operation for a 3-byte transfer can be inferred from these diagrams.

SPI Configuration

ADDRESS 0X00: CHIP_PORT_CONFIG

Bit ordering and SPI reset are controlled by this register. Bit order can be selected as MSB to LSB (MSB first) or LSB to MSB (LSB first) to accommodate various microcontrollers.

Bit 7 SDO Active

Bit 6 LSB First

Setting this bit high configures the SPI to interpret serial data as arriving in LSB to MSB order.

Bit 5 Soft Reset

Setting this bit high resets all SPI registers to default values.

Bit 4 Reserved

This bit should always be set high.

Bits 3:0 These bits should always mirror bits 4:7 to avoid ambiguity in bit ordering.

ADDRESS 0X02: BURST_END

If a series of sequential registers are to be set, burst mode can improve throughput by eliminating redundant addressing. In 3-wire SPI mode the burst is ended by pulling the CSB pin high. If the device is operated in 2-wire mode the CSB pin is not available. In that case, setting the burst_end address determines the end of the transfer. During a write operation, the user must be cautious to transmit the correct number of bytes based on the starting and ending addresses.

Bits 7:0 Burst End Address

This register value determines the ending address of the burst data.

Device Information

ADDRESS 0X08: CHIP_ID

ADDRESS 0X09: CHIP_VERSION

The generic die identifier and a revision number, respectively, can be read from these two registers.

Indexed Device Configuration/Control

ADDRESS 0X10: DEVICE_INDEX_A

A common SPI map, which can accommodate single-channel or multichannel devices, is used for all Intersil ADC products. Certain configuration commands (identified as Indexed in the SPI map) can be executed on a per-converter basis. This register determines which converter is being addressed for an Indexed command. It is important to note that only a single converter can be addressed at a time.

This register defaults to 00h, indicating that no ADC is addressed. Therefore Bit 0 must be set high in order to execute any Indexed commands. Error code ‘AD’ is returned if any indexed register is read from without properly setting device_index_A.

ADDRESS 0X20: OFFSET_COARSE AND

ADDRESS 0X21: OFFSET_FINE

The input offset of the ADC core can be adjusted in fine and coarse steps. Both adjustments are made via an 8-bit word as detailed in Table 4.

The default value of each register will be the result of the self-calibration after initial power-up. If a register is to be incremented or decremented, the user should first read the register value then write the incremented or decremented value back to the same register.

TABLE 4. OFFSET ADJUSTMENTS

PARAMETER	0x20[7:0] COARSE OFFSET	0x21[7:0] FINE OFFSET
Steps	255	255
–Full Scale (0x00)	-133LSB (-47mV)	-5LSB (-1.75mV)
Mid–Scale (0x80)	0.0LSB (0.0mV)	0.0LSB
+Full Scale (0xFF)	+133LSB (+47mV)	+5LSB (+1.75mV)
Nominal Step Size	1.04LSB (0.37mV)	0.04LSB (0.014mV)

ADDRESS 0X22: GAIN_COARSE

ADDRESS 0X23: GAIN_MEDIUM

ADDRESS 0X24: GAIN_FINE

Gain of the ADC core can be adjusted in coarse, medium and fine steps. Coarse gain is a 4-bit adjustment while medium and fine are 8-bit. Multiple Coarse Gain bits can be set for a total adjustment range of ±4.2% (‘0011’ =~ -4.2% and ‘1100’ =~ +4.2%). It is recommended to use one of the coarse gain settings (-4.2%, -2.8%, -1.4%, 0, 1.4%, 2.8%, 4.2%) and fine-tune the gain using the registers at 23h and 24h.

The default value of each register will be the result of the self-calibration after initial power-up. If a register is to be incremented or decremented, the user should first read the register value then write the incremented or decremented value back to the same register.

TABLE 5. COARSE GAIN ADJUSTMENT

0x22[3:0]	NOMINAL COARSE GAIN ADJUST (%)
Bit 3	+2.8
Bit 2	+1.4
Bit 1	-2.8
Bit 0	-1.4

TABLE 6. MEDIUM AND FINE GAIN ADJUSTMENTS

PARAMETER	0x23[7:0] MEDIUM GAIN	0x24[7:0] FINE GAIN
Steps	256	256
–Full Scale (0x00)	-2%	-0.20%
Mid–Scale (0x80)	0.00%	0.00%
+Full Scale (0xFF)	+2%	+0.2%
Nominal Step Size	0.016%	0.0016%

ADDRESS 0X25: MODES

Two distinct reduced power modes can be selected. By default, the tri-level NAPSLP pin can select normal operation or sleep modes (refer to "Nap/Sleep" on page 18). This functionality can be overridden and controlled through the SPI. This is an indexed function when controlled from the SPI, but a global function when driven from the pin. This register is not changed by a soft reset.

TABLE 7. POWER-DOWN CONTROL

VALUE	0x25[2:0] POWER-DOWN MODE
000	Pin Control
001	Normal Operation
010	Nap Mode
100	Sleep Mode

Nap mode must be entered by executing the following sequence:

SEQUENCE	REGISTER	VALUE
1	0x10	0x01
2	0x25	0x02
3	0x10	0x02
4	0x25	0x02

Return to normal operation as follows:

SEQUENCE	REGISTER	VALUE
1	0x10	0x01
2	0x25	0x01
3	0x10	0x02
4	0x25	0x01

Global Device Configuration/Control

ADDRESS 0X71: PHASE_SLIP

When using the clock divider, it's not possible to determine the synchronization of the incoming and divided clock phases. This is particularly important when multiple ADCs are used in a time-interleaved system. The phase slip feature allows the rising edge of the divided clock to be advanced by one input clock cycle when in CLK/4 mode, as shown in Figure 41. Execution of a phase_slip command is accomplished by first writing a '0' to Bit 0 at address 71h followed by writing a '1' to Bit 0 at address 71h (32 sclk cycles).

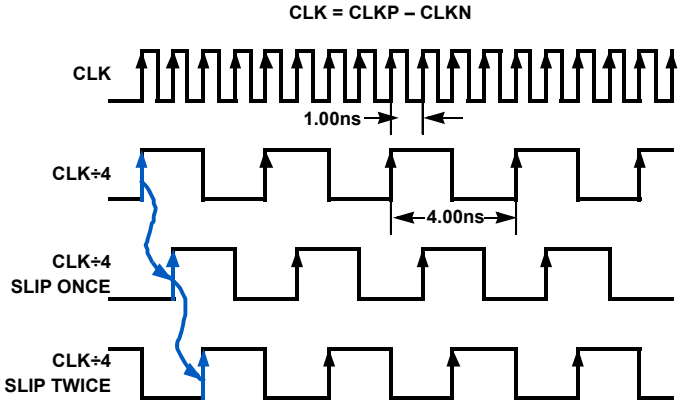

FIGURE 41. PHASE SLIP: CLK÷4 MODE, f_{CLOCK} = 1000MHz

ADDRESS 0X72: CLOCK_DIVIDE

The KAD5510P has a selectable clock divider that can be set to divide by four, two or one (no division, refer to "Clock Input" on page 17). This functionality can be controlled through the SPI, as shown in Table 8. This register is not changed by a soft reset.

TABLE 8. CLOCK DIVIDER SELECTION

VALUE	0x72[2:0] CLOCK DIVIDER
000	Pin Control
001	Divide by 1
010	Divide by 2
100	Divide by 4

ADDRESS 0X73: OUTPUT_MODE_A

The output_mode_A register controls the physical output format of the data, as well as the logical coding. The KAD5510P can present output data in two physical formats: LVDS or LVCMOS. Additionally, the drive strength in LVDS mode can be set high (3mA) or low (2mA). This functionality can be controlled through the SPI, as shown in Table 9.

TABLE 9. OUTPUT MODE CONTROL

VALUE	0x93[7:5]
000	Pin Control
001	LVDS 2mA
010	LVDS 3mA
100	LVCMOS

Data can be coded in three possible formats: two's complement, Gray code or offset binary. This functionality can be controlled through the SPI, as shown in Table 10.

This register is not changed by a soft reset.

TABLE 10. OUTPUT FORMAT CONTROL

VALUE	0x93[2:0] OUTPUT FORMAT
000	Pin Control

TABLE 10. OUTPUT FORMAT CONTROL (Continued)

VALUE	0x93[2:0] OUTPUT FORMAT
001	Two's Complement
010	Gray Code
100	Offset Binary

ADDRESS 0X74: OUTPUT_MODE_B

ADDRESS 0X75: CONFIG_STATUS

Bit 6 DLL Range

This bit sets the DLL operating range to fast (default) or slow.

Internal clock signals are generated by a Delay-Locked Loop (DLL), which has a finite operating range. Table 11 shows the allowable sample rate ranges for the slow and fast settings.

TABLE 11. DLL RANGES

DLL RANGE	MIN	MAX	UNIT
Slow	40	100	MSPS
Fast	80	f_S MAX	MSPS

The output_mode_B and config_status registers are used in conjunction to enable DDR mode and select the frequency range of the DLL clock generator. The method of setting these options is different from the other registers.

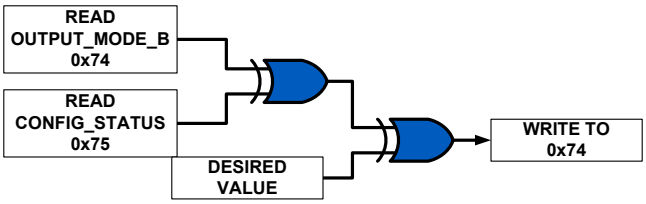

FIGURE 42. SETTING OUTPUT_MODE_B REGISTER

The procedure for setting output_mode_B is shown in Figure 42. Read the contents of output_mode_B and config_status and XOR them. Then XOR this result with the desired value for output_mode_B and write that XOR result to the register.

Bit 4 DDR Enable

This bit sets the output mode to DDR or SDR.

This bit is set high by default enabling DDR outputs. Do not set this bit low or invalid output data will result.

Device Test

The KAD5510 can produce preset or user defined patterns on the digital outputs to facilitate in-site testing. A static word can be placed on the output bus, or two different words can alternate. In the alternate mode, the values defined as Word 1 and Word 2 (as shown in Table 12) are set on the output bus on alternating clock phases. The test mode is enabled asynchronously to the sample clock, therefore several sample clock cycles may elapse before the data is present on the output bus.

ADDRESS 0XC0: TEST_IO

Bits 7:6 User Test Mode

These bits set the test mode to static (0x00) or alternate (0x01) mode. Other values are reserved.

The four LSBs in this register (Output Test Mode) determine the test pattern in combination with registers 0xC2 through 0xC5. Refer to Table 12.

TABLE 12. OUTPUT TEST MODES

VALUE	0xC0[3:0] OUTPUT TEST MODE	WORD 1	WORD 2
0000	Off		
0001	Midscale	0x8000	N/A
0010	Positive Full-Scale	0xFFFF	N/A
0011	Negative Full-Scale	0x0000	N/A
0100	Checkerboard	0xAAAA	0x5555
0101	Reserved	N/A	N/A
0110	Reserved	N/A	N/A
0111	One/Zero	0xFFFF	0x0000
1000	User Pattern	user_patt1	user_patt2

ADDRESS 0XC2: USER_PATT1_LSB AND

ADDRESS 0XC3: USER_PATT1_MSB

These registers define the lower and upper eight bits, respectively, of the first user-defined test word.

ADDRESS 0XC4: USER_PATT2_LSB AND

ADDRESS 0XC5: USER_PATT2_MSB

These registers define the lower and upper eight bits, respectively, of the second user-defined test word.

48-Pin Package Notes

The KAD5510 is only available in a 48-pin package. While fully compatible with other family members in the 48-pin package there are some key differences from the 72-pin package. The 48-pin package option supports LVDS DDR only. A reduced set of pin selectable functions are available in the 48-pin package due to the reduced pinout; (OUTMODE, OUTFMT, and CLKDIV pins are not available). Table 13 shows the default state for these functions for the 48-pin package. Note that these functions are available through the SPI, allowing a user to set these modes as they desire, offering the same flexibility as the 72-pin family members.

TABLE 13. 48 PIN SPI - ADDRESSABLE FUNCTIONS

FUNCTION	DESCRIPTION	DEFAULT STATE
CLKDIV	Clock Divider	Divide by 1
OUTMODE	Output Driver Mode	LVDS, 3mA (DDR)
OUTFMT	Data Coding	Two's Complement

SPI Memory Map

TABLE 14. SPI MEMORY MAP

	ADDR (HEX)	PARAMETER NAME	BIT 7 (MSB)	BIT 6	BIT 5	BIT 4	BIT 3	BIT 2	BIT 1	BIT 0 (LSB)	DEF. VALUE (HEX)	INDEXED/ GLOBAL
SPI CONFIG	00	port_config	SDO Active	LSB First	Soft Reset			Mirror (bit5)	Mirror (bit6)	Mirror (bit7)	00h	G
	01	Reserved	Reserved									
	02	burst_end	Burst end address [7:0]								00h	G
	03-07	Reserved	Reserved									
INFO	08	chip_id	Chip ID #								Read only	G
	09	chip_version	Chip Version #								Read only	G
INDEXED DEVICE CONFIG/CONTROL	10	device_index_A	Reserved							ADC00	00h	I
	11-1F	Reserved	Reserved									
	20	offset_coarse	Coarse Offset								cal. value	I
	21	offset_fine	Fine Offset								cal. value	I
	22	gain_coarse	Reserved				Coarse Gain				cal. value	I
	23	gain_medium	Medium Gain								cal. value	I
	24	gain_fine	Fine Gain								cal. value	I
	25	modes	Reserved					**Power-Down Mode [2:0]** 000 = Pin Control 001 = Normal Operation 010 = Nap 100 = Sleep other codes = Reserved			00h Not affected by soft reset	I
	26-5F	Reserved	Reserved									
	60-6F	Reserved	Reserved									
GLOBAL DEVICE CONFIG/CONTROL	70	Reserved	Reserved									
	71	phase_slip	Reserved							Next Clock Edge	00h	G
	72	clock_divide						**Clock Divide [2:0]** 000 = Pin Control 001 = Divide by 1 010 = Divide by 2 100 = Divide by 4 other codes = Reserved			00h Not affected by soft reset	G
	73	output_mode_A	**Output Mode [2:0]** 000 = Pin Control 001 = LVDS 2mA 010 = LVDS 3mA 100 = LVCMOS other codes = Reserved					**Output Format [2:0]** 000 = Pin Control 001 = Twos Complement 010 = Gray Code 100 = Offset Binary other codes = Reserved			00h Not affected by soft reset	G
	74	output_mode_B		**DLL Range** 0 = Fast 1 = Slow		DDR Enable (Note 14)					00h Not affected by soft reset	G
	75	config_status		XOR Result		XOR Result					Read Only	G
	76-BF	Reserved	Reserved									

TABLE 14. SPI MEMORY MAP (Continued)

	ADDR (HEX)	PARAMETER NAME	BIT 7 (MSB)	BIT 6	BIT 5	BIT 4	BIT 3	BIT 2	BIT 1	BIT 0 (LSB)	DEF. VALUE (HEX)	INDEXED/ GLOBAL
Device Test	C0	test_io	User Test Mode [1:0] 00 = Single 01 = Alternate 10 = Reserved 11 = Reserved				Output Test Mode [3:0] 0 = Off 1 = Midscale Short 2 = +FS Short 3 = -FS Short 4 = Checker Board 5 = Reserved 6 = Reserved		7 = One/Zero Word Toggle 8 = User Input 9 to 15 = Reserved		00h	G
	C1	Reserved	Reserved								00h	G
	C2	user_patt1_lsb	B7	B6	B5	B4	B3	B2	B1	B0	00h	G
	C3	user_patt1_msb	B15	B14	B13	B12	B11	B10	B9	B8	00h	G
	C4	user_patt2_lsb	B7	B6	B5	B4	B3	B2	B1	B0	00h	G
	C5	user_patt2_msb	B15	B14	B13	B12	B11	B10	B9	B8	00h	G
	C6-FF	Reserved	Reserved									

NOTE:

14. At power-up, the DDR Enable bit is set to a logic ‘1’ internally for the 48 pin package by an internal pull-up. Do not set this bit low or invalid output data will result.

Equivalent Circuits

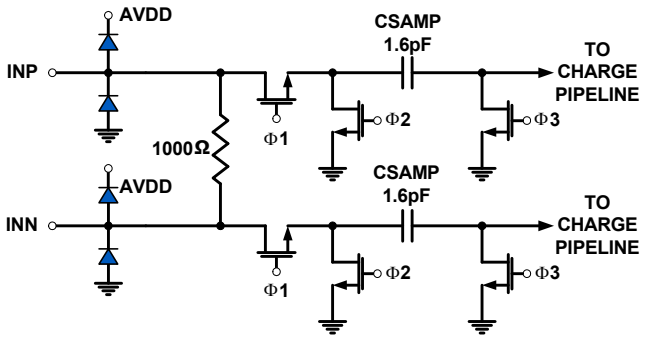

FIGURE 43. ANALOG INPUTS

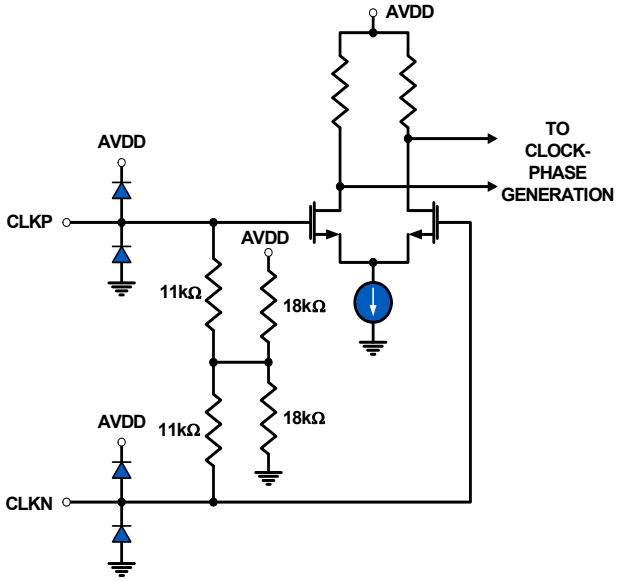

FIGURE 44. CLOCK INPUTS

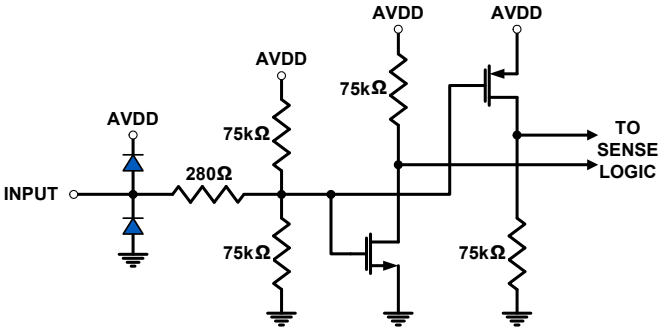

FIGURE 45. TRI-LEVEL DIGITAL INPUTS

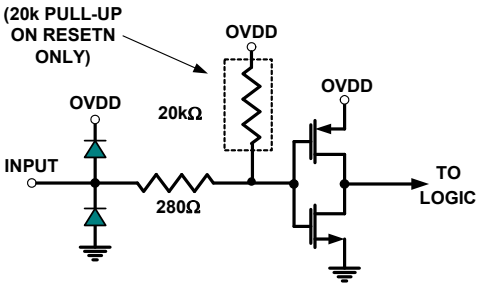

FIGURE 46. DIGITAL INPUTS

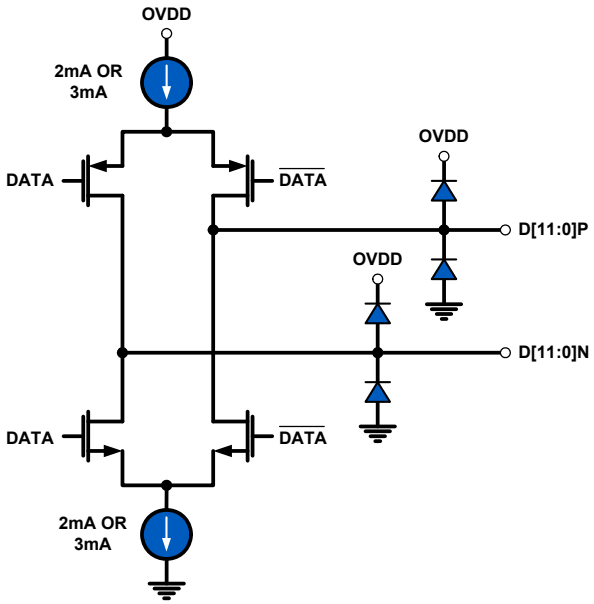

FIGURE 47. LVDS OUTPUTS

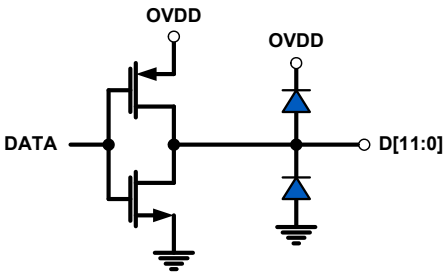

FIGURE 48. CMOS OUTPUTS

Equivalent Circuits (Continued)

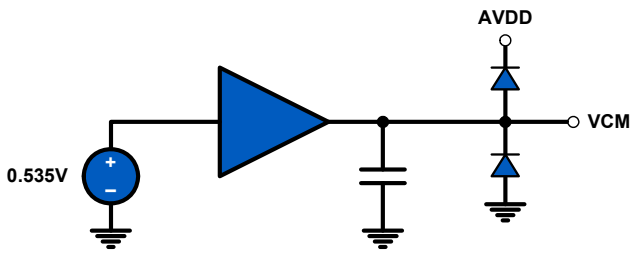

FIGURE 49. VCM_OUT OUTPUT

ADC Evaluation Platform

Intersil offers an ADC Evaluation platform, which can be used to evaluate any of the KADxxxxx ADC family. The platform consists of a FPGA based data capture motherboard and a family of ADC daughtercards. This USB based platform allows a user to quickly evaluate the ADC's performance at a user's specific application frequency requirements. More information is available at:

http://www.intersil.com/converters/adc_eval_platform/

Layout Considerations

PCB Layout Example

For an example application circuit and PCB layout, please refer to the evaluation board documentation provided in the web product folder at:

- KAD5510P-12
- KAD5510P-17
- KAD5510P-21
- KAD5510P-25

Split Ground and Power Planes

Data converters operating at high sampling frequencies require extra care in PC board layout. Many complex board designs benefit from isolating the analog and digital sections. Analog supply and ground planes should be laid out under signal and clock inputs. Locate the digital planes under outputs and logic pins. Grounds should be joined under the chip.

Clock Input Considerations

Use matched transmission lines to the transformer inputs for the analog input and clock signals. Locate transformers and terminations as close to the chip as possible.

Exposed Paddle

The exposed paddle must be electrically connected to analog ground (AVSS) and should be connected to a large copper plane using numerous vias for optimal thermal performance.

Bypass and Filtering

Bulk capacitors should have low equivalent series resistance. Tantalum is a good choice. For best performance, keep ceramic bypass capacitors very close to device pins. Longer traces will increase inductance, resulting in diminished dynamic performance and accuracy. Make sure that connections to ground are direct and low impedance. Avoid forming ground loops.

LVDS Outputs

Output traces and connections must be designed for 50Ω (100Ω differential) characteristic impedance. Keep traces direct and minimize bends where possible. Avoid crossing ground and power-plane breaks with signal traces.

LVCMOS Outputs

Output traces and connections must be designed for 50Ω characteristic impedance. Care should be taken when using the DDR CMOS outputs at clock rates greater than 200MHz. Series termination resistors close to the ADC should drive short traces with minimum parasitic loading to assure adequate signal integrity

Unused Inputs

Standard logic inputs (RESETN, CSB, SCLK, SDIO), which will not be operated do not require connection to ensure optimal ADC performance. These inputs can be left floating if they are not used. The SDO output must be connected to OVDD with a 4.7kΩ resistor or the ADC will not exit the reset state. Tri-level inputs (NAPSLP) accept a floating input as a valid state, and therefore should be biased according to the desired functionality.

General PowerPAD Design Considerations

Figure 50 is a generic illustration of how to use vias to remove heat from a QFN package with an exposed thermal pad. A specific example can be found in the evaluation board PCB layout previously referenced.

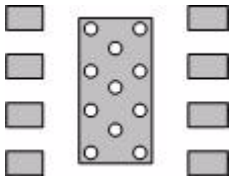

FIGURE 50. PCB VIA PATTERN

Filling the exposed thermal pad area with vias provides optimum heat transfer to the PCB's internal plane(s). Vias should be evenly distributed from edge-to-edge on the exposed pad to maintain a constant temperature across the entire pad. Setting the center-to-center spacing of the vias at three times the via pad radius will provide good heat transfer for high power devices. The vias below the KAD5510P may be spaced further apart as shown on the evaluation board since it is a low-power device. The via diameter should be small but not too small to allow solder wicking during reflow. PCB fabrication and assembly companies can provide specific guidelines based on the layer stack and assembly process.

Connect all vias under the KAD5510P to AVSS. It is important to maximize the heat transfer by avoiding the use of "thermal relief" patterns when connecting the vias to the internal AVSS plane(s).

Definitions

Analog Input Bandwidth is the analog input frequency at which the spectral output power at the fundamental frequency (as determined by FFT analysis) is reduced by 3dB from its full-scale low-frequency value. This is also referred to as Full Power Bandwidth.

Aperture Delay or Sampling Delay is the time required after the rise of the clock input for the sampling switch to open, at which time the signal is held for conversion.

Aperture Jitter is the RMS variation in aperture delay for a set of samples.

Clock Duty Cycle is the ratio of the time the clock wave is at logic high to the total time of one clock period.

Differential Non-Linearity (DNL) is the deviation of any code width from an ideal 1 LSB step.

Effective Number of Bits (ENOB) is an alternate method of specifying Signal to Noise-and-Distortion Ratio (SINAD). In dB, it is calculated as: ENOB = (SINAD - 1.76)/6.02

Gain Error is the ratio of the difference between the voltages that cause the lowest and highest code transitions to the full-scale voltage less 2 LSB. It is typically expressed in percent.

Integral Non-Linearity (INL) is the maximum deviation of the ADC's transfer function from a best fit line determined by a least squares curve fit of that transfer function, measured in units of LSBs.

Least Significant Bit (LSB) is the bit that has the smallest value or weight in a digital word. Its value in terms of input voltage is $V_{FS}/(2^N-1)$ where N is the resolution in bits.

Missing Codes are output codes that are skipped and will never appear at the ADC output. These codes cannot be reached with any input value.

Most Significant Bit (MSB) is the bit that has the largest value or weight.

Pipeline Delay is the number of clock cycles between the initiation of a conversion and the appearance at the output pins of the data.

Power Supply Rejection Ratio (PSRR) is the ratio of the observed magnitude of a spur in the ADC FFT, caused by an AC signal superimposed on the power supply voltage.

Signal to Noise-and-Distortion (SINAD) is the ratio of the RMS signal amplitude to the RMS sum of all other spectral components below one half the clock frequency, including harmonics but excluding DC.

Signal-to-Noise Ratio (without Harmonics) is the ratio of the RMS signal amplitude to the RMS sum of all other spectral components below one-half the sampling frequency, excluding harmonics and DC.

SNR and SINAD are either given in units of dB when the power of the fundamental is used as the reference, or dBFS (dB to full scale) when the converter's full-scale input power is used as the reference.

Spurious-Free-Dynamic Range (SFDR) is the ratio of the RMS signal amplitude to the RMS value of the largest spurious spectral component. The largest spurious spectral component may or may not be a harmonic.

Revision History

DATE	REVISION	CHANGE
February 8, 2016	FN7693.3	Applied Intersil's new standards throughout datasheet. In the Electrical Specification table on page 7 updated the following: -Changed the maximum specs for all four devices for NAP Mode. -Changed the maximum specifications for all four devices for 1.8V Analog Supply Current (IAVDD). Replaced Products section with About Intersil.
April 7, 2011	FN7693.2	Corrected Figure number from 1 to 4 for "DDR CMOS TIMING DIAGRAM (See "Digital Outputs" on page 18)" on page 10 (duplicate Figure #) Corrected Figure number from 1 to 3 for "DDR LVDS TIMING DIAGRAM (See "Digital Outputs" on page 18)" on page 10 (duplicate Figure #) Corrected Figure 11 on page 13 to match "Electrical Specifications" table on page 7.
January 3, 2011	FN7693.1	Initial release to web.

About Intersil

Intersil Corporation is a leading provider of innovative power management and precision analog solutions. The company's products address some of the largest markets within the industrial and infrastructure, mobile computing and high-end consumer markets.

For the most updated datasheet, application notes, related documentation and related parts, please see the respective product information page found at www.intersil.com.

You may report errors or suggestions for improving this datasheet by visiting www.intersil.com/ask.

Reliability reports are also available from our website at www.intersil.com/support.

© Copyright Intersil Americas LLC 2011-2016. All Rights Reserved.
All trademarks and registered trademarks are the property of their respective owners.

For additional products, see www.intersil.com/en/products.html

Intersil products are manufactured, assembled and tested utilizing ISO9001 quality systems as noted in the quality certifications found at www.intersil.com/en/support/qualandreliability.html

Intersil products are sold by description only. Intersil may modify the circuit design and/or specifications of products at any time without notice, provided that such modification does not, in Intersil's sole judgment, affect the form, fit or function of the product. Accordingly, the reader is cautioned to verify that datasheets are current before placing orders. Information furnished by Intersil is believed to be accurate and reliable. However, no responsibility is assumed by Intersil or its subsidiaries for its use; nor for any infringements of patents or other rights of third parties which may result from its use. No license is granted by implication or otherwise under any patent or patent rights of Intersil or its subsidiaries.

For information regarding Intersil Corporation and its products, see www.intersil.com

Package Outline Drawing

L48.7x7E

48 LEAD QUAD FLAT NO-LEAD PLASTIC PACKAGE

Rev 1, 2/09

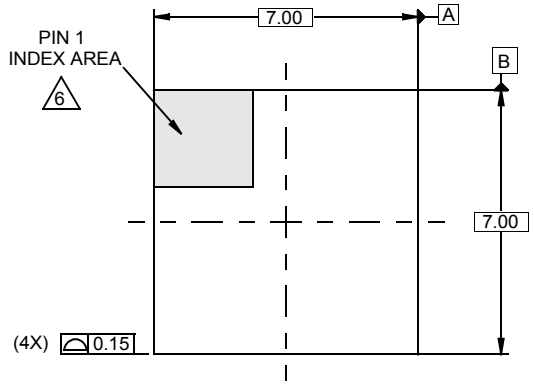

TOP VIEW

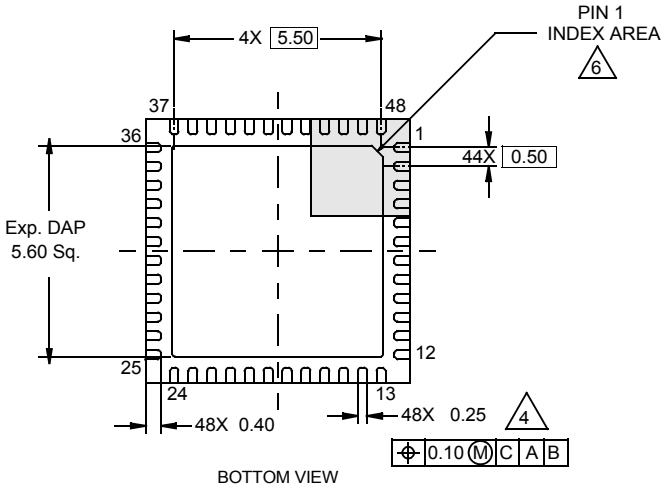

BOTTOM VIEW

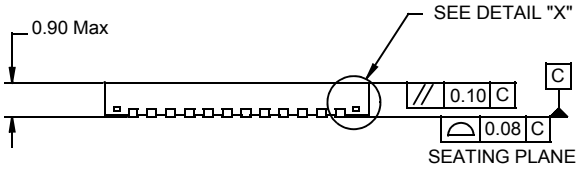

SIDE VIEW

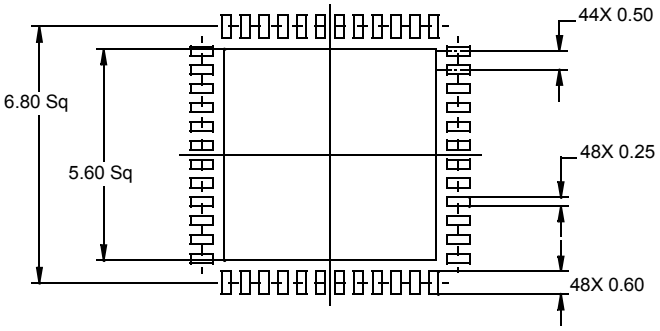

TYPICAL RECOMMENDED LAND PATTERN

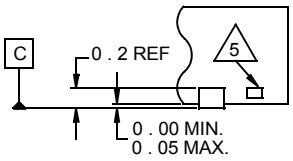

DETAIL "X"

NOTES:

1. Dimensions are in millimeters.
   Dimensions in ( ) for Reference Only.
2. Dimensioning and tolerancing conform to AMSEY14.5m-1994.
3. Unless otherwise specified, tolerance : Decimal ± 0.05
4. Dimension b applies to the metallized terminal and is measured between 0.15mm and 0.30mm from the terminal tip.
5. Tiebar shown (if present) is a non-functional feature.
6. The configuration of the pin #1 identifier is optional, but must be located within the zone indicated. The pin #1 identifier may be either a mold or mark feature.