Sound Processor with Built-in 3-band Equalizer

BD37524FS

General Description

BD37524FS is a sound processor with built-in 3-band equalizer for car audio. Other features are stereo 5ch input selector, input-gain control, main volume, loudness, 5ch fader volume, LPF for subwoofer, level meter. It is equipped with an “Advanced switch circuit”, which is an original ROHM technology that reduces various switching noise (ex. No-signal, low frequency likes 20Hz & large signal inputs). The “Advanced switch” makes control of microcomputer easier and can be used for designing high quality car audio systems.

Features

- Reduced switching noise of input gain control, mute, main volume, fader volume, bass, treble, and loudness by using advanced switch circuit
- Built-in differential input selector and 4 single-ended input selectors
- Built-in ground isolation amplifier inputs, which is ideal for external stereo input.
- Built-in input gain controller reduces switching noise for volume of a portable audio input.
- Lesser number of external components due to built-in 3-band equalizer filter, LPF for subwoofer, loudness filter. This makes,it possible to control the Q, Gv, fo of 3-band equalizer, fc of LPF, fo, and Gv of loudness through I^2C BUS.
- A gain adjustment quantity of ±20dB with 1 dB step gain adjustment is possible for bass, middle, and treble.
- Built-in subwoofer output terminals.
- Energy-saving design resulting in low current consumption is achieved by utilizing the Bi-CMOS process. It has the advantage in quality over scaling down the power heat control of the internal regulators.
- Input pins and output pins are organized and separately laid out to keep the signal flow in one direction which consequently, simplify pattern layout of the set board and decrease the board dimensions. .
- It is possible to be controlled by a 3.3V / 5V I^2C BUS

Key Specifications

- Power Supply Voltage Range: 7.0V to 9.5V
- Circuit Current (No Signal): 38mA(Typ)
- Total Harmonic Distortion1 (FRONT,REAR): 0.001%(Typ)
- Total Harmonic Distortion2 (SUBWOOFER): 0.002%(Typ)
- Maximum Input Voltage: 2.3Vrms(Typ)
- Cross-talk Between Selectors: -100dB(Typ)
- Volume Control Range: +15dB to -79dB
- Output Noise Voltage1 (FRONT,REAR): 3.8µVrms(Typ)
- Output Noise Voltage2 (SUBWOOFER): 4.8µVrms(Typ)
- Residual Output Noise Voltage: 1.8µVrms(Typ)
- Operating Temperature Range: -40°C to +85°C

Package

W(Typ) x D(Typ) x H(Max)

SSOP-A24
10.00mm x 7.80mm x 2.10mm

Applications

It is optimal for car audio systems. It is also suitable for other audio equipment such as mini Compo, micro Compo, TV etc

○Product structure：Silicon monolithic integrated circuit ○This product has no designed protection against radioactive rays

© 2015 ROHM Co., Ltd. All rights reserved.

Typical Application Circuit

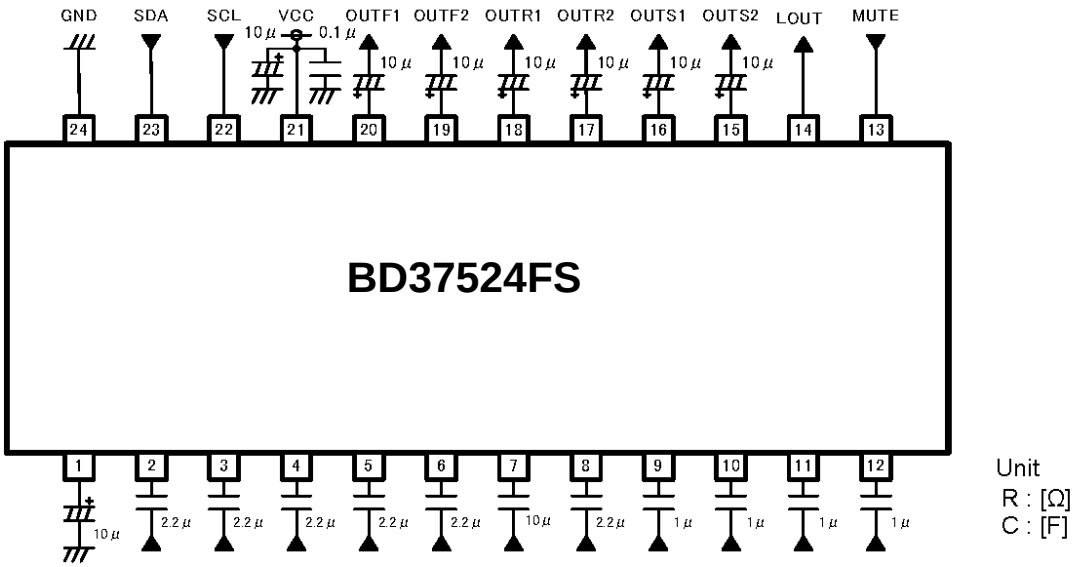

Pin Configuration

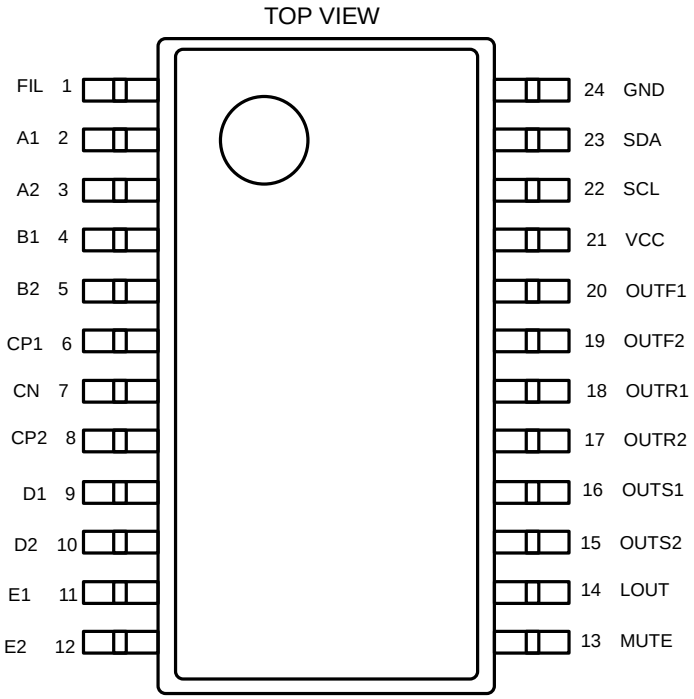

Pin Descriptions

Pin No.	Pin Name	Description	Pin No.	Pin Name	Description
1	FIL	VCC/2 terminal	13	MUTE	External compulsory mute terminal
2	A1	A input terminal of 1ch	14	LOUT	Output terminal for Level meter
3	A2	A input terminal of 2ch	15	OUTS2	Subwoofer output terminal of 2ch
4	B1	B input terminal of 1ch	16	OUTS1	Subwoofer output terminal of 1ch
5	B2	B input terminal of 2ch	17	OUTR2	Rear output terminal of 2ch
6	CP1	C positive input terminal of 1ch	18	OUTR1	Rear output terminal of 1ch
7	CN	C negative input terminal	19	OUTF2	Front output terminal of 2ch
8	CP2	C positive input terminal of 2ch	20	OUTF1	Front output terminal of 1ch
9	D1	D input terminal of 1ch	21	VCC	Power supply terminal
10	D2	D input terminal of 2ch	22	SCL	I^2C Communication clock terminal
11	E1	E input terminal of 1ch	23	SDA	I^2C Communication data terminal
12	E2	E input terminal of 2ch	24	GND	GND terminal

© 2015 ROHM Co., Ltd. All rights reserved.

Block Diagram

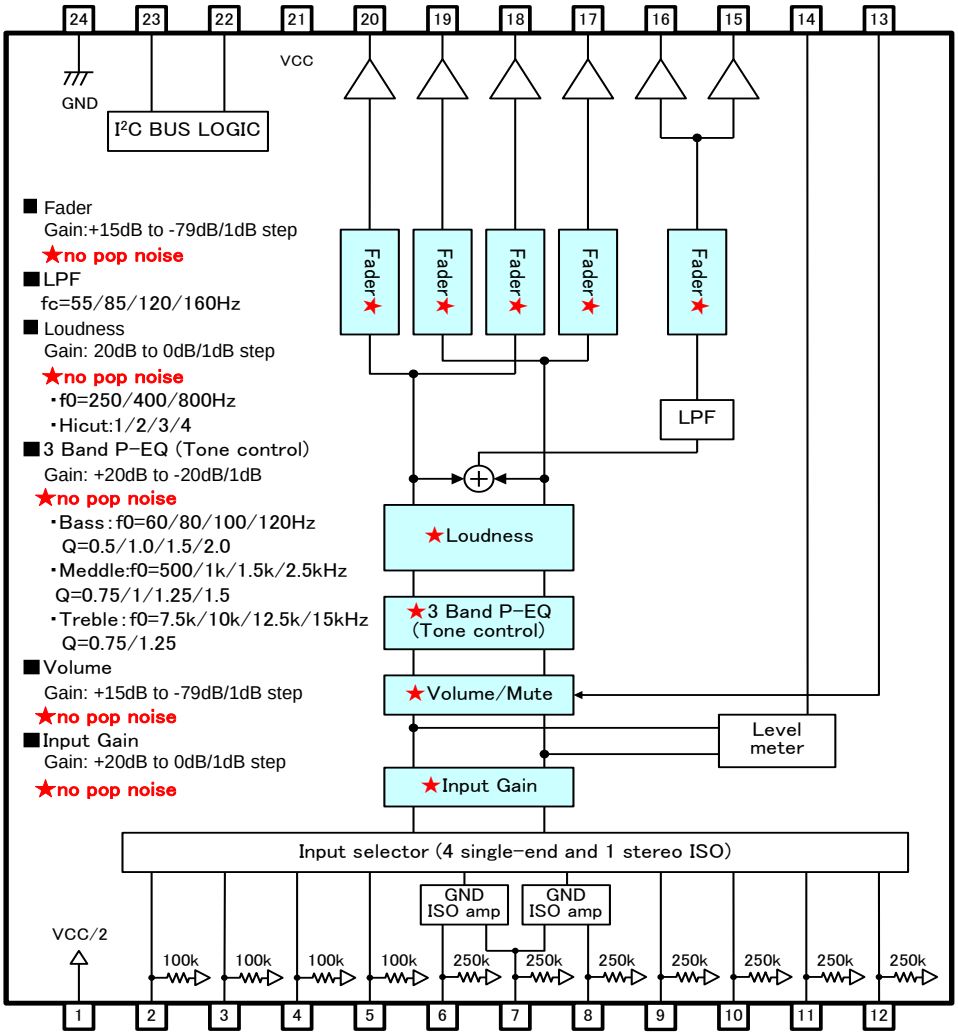

© 2015 ROHM Co., Ltd. All rights reserved.

Absolute Maximum Ratings (Ta=25°C)

Parameter	Symbol	Rating	Unit
Power supply Voltage	V_{CC}	10.0	V
Input voltage	V_{IN}	V_{CC}+0.3 to GND-0.3	V
Power Dissipation	Pd	1 (Note 1)	W
Storage Temperature	Tstg	-55 to +150	°C

(Note 1) When mounted on standard board (70 x 70 x 1.6(mm^3)), derate by 8mW/°C for Ta above25°C.
Thermal resistance θja = 125(°C/W)
Material : A FR4 grass epoxy board(3% or less of copper foil area)

Caution: Operating the IC over the absolute maximum ratings may damage the IC. The damage can either be a short circuit between pins or an open circuit between pins and the internal circuitry. Therefore, it is important to consider circuit protection measures, such as adding a fuse, in case the IC is operated over the absolute maximum ratings.

Recommended Operating Conditions

Parameter	Symbol	Min	Typ	Max	Unit
Power Supply Voltage	V_{CC}	7.0	-	9.5	V
Temperature	Topr	-40	-	+85	°C

Electrical Characteristics

(Unless otherwise noted, Ta=25°C, V_{CC}=8.5V, f=1kHz, V_{IN} =1Vrms, Rg=600Ω, R_L=10kΩ, A1 input, Input gain 0dB, Mute OFF, Volume 0dB, Tone control 0dB, Loudness 0dB, LPF OFF, Fader 0dB)

BLOCK	Parameter	Symbol	Limit			Unit	Conditions
			Min	Typ	Max		
GENERAL	Circuit Current (No Signal)	I_Q	-	38	48	mA	No signal
	Voltage Gain	G_V	-1.5	0	+1.5	dB	G_V=20log(V_{OUT}/V_{IN})
	Channel Balance	CB	-1.5	0	+1.5	dB	CB = G_{V1}-G_{V2}
	Total Harmonic Distortion 1 (FRONT,REAR)	THD+N1	-	0.001	0.05	%	V_{OUT}=1Vrms BW=400Hz-30KHz
	Total Harmonic Distortion 2 (SUBWOOFER)	THD+N2	-	0.002	0.05	%	V_{OUT}=1Vrms BW=400Hz-30KHz
	Output Noise Voltage 1 (FRONT,REAR) *	V_{NO1}	-	3.8	15	μVrms	Rg = 0Ω BW = IHF-A
	Output Noise Voltage 2 (SUBWOOFER) *	V_{NO2}	-	4.8	15	μVrms	Rg = 0Ω BW = IHF-A
	Residual Output Noise Voltage *	V_{NOR}	-	1.8	10	μVrms	Fader = -∞dB Rg = 0Ω BW = IHF-A
	Crosstalk Between Channels *	CTC	-	-100	-90	dB	Rg = 0Ω CTC=20log(V_{OUT}/V_{IN}) BW = IHF-A
	Ripple Rejection	RR	-	-70	-40	dB	f=1KHz V_{RR}=100mVrms RR=20log(V_{CC} IN/V_{OUT})
INPUT SELECTOR	Input Impedance(A, B)	R_{IN_S}	70	100	130	kΩ	
	Input Impedance (C,D,E)	R_{IN_D}	175	250	325	kΩ	
	Maximum Input Voltage	V_{IM}	2.1	2.3	-	Vrms	V_{IM} at THD+N(V_{OUT})=1% BW=400Hz-30KHz
	Crosstalk Between Selectors *	CTS	-	-100	-90	dB	Rg = 0Ω CTS=20log(V_{OUT}/V_{IN}) BW = IHF-A
	Common Mode Rejection Ratio *	CMRR	50	65	-	dB	CP1 and CN input CP2 and CN input CMRR=20log(V_{IN}/V_{OUT}) BW = IHF-A
INPUT GAIN	Minimum Input Gain	G_{IN_MIN}	-2	0	+2	dB	Input gain 0dB V_{IN}=100mVrms G_{IN}=20log(V_{OUT}/V_{IN})
	Maximum Input Gain	G_{IN_MAX}	18	20	22	dB	Input gain 20dB V_{IN}=100mVrms G_{IN}=20log(V_{OUT}/V_{IN})
	Gain Set Error	G_{IN_ERR}	-2	0	+2	dB	GAIN=+20dB to +1dB

© 2015 ROHM Co., Ltd. All rights reserved.

Electrical Characteristics - continued

BLOCK	Parameter	Symbol	Limit			Unit	Conditions
			Min	Typ	Max		
MUTE	Mute Attenuation *	G_{MUTE}	-	-105	-85	dB	Mute ON G_{MUTE}=20log(V_{OUT}/V_{IN}) BW = IHF-A
VOLUME	Maximum Gain	G_{V_MAX}	13	15	17	dB	Volume = 15dB V_{IN}=100mVrms G_V=20log(V_{OUT}/V_{IN})
	Maximum Attenuation *	G_{V_MIN}	-	-100	-85	dB	Volume = -∞dB G_V=20log(V_{OUT}/V_{IN}) BW = IHF-A
	Attenuation Set Error 1	G_{V_ERR1}	-2	0	+2	dB	GAIN & ATT=+15dB to -15dB
	Attenuation Set Error 2	G_{V_ERR2}	-3	0	+3	dB	ATT=-16dB to -47dB
	Attenuation Set Error 3	G_{V_ERR3}	-4	0	+4	dB	ATT=-48dB to -79dB
BASS	Maximum Boost Gain	G_{B_BST}	18	20	22	dB	Gain=+20dB f=100Hz V_{IN}=100mVrms G_B=20log (V_{OUT}/V_{IN})
	Maximum Cut Gain	G_{B_CUT}	-22	-20	-18	dB	Gain=-20dB f=100Hz V_{IN}=2Vrms G_B=20log (V_{OUT}/V_{IN})
	Gain Set Error	G_{B_ERR}	-2	0	+2	dB	Gain=+20dB to -20dB f=100Hz
MIDDLE	Maximum Boost Gain	G_{M_BST}	18	20	22	dB	gain=+20dB f=1KHz V_{IN}=100mVrms G_M=20log (V_{OUT}/V_{IN})
	Maximum Cut Gain	G_{M_CUT}	-22	-20	-18	dB	Gain=-20dB f=1KHz V_{IN}=2Vrms G_M=20log (V_{OUT}/V_{IN})
	Gain Set Error	G_{M_ERR}	-2	0	+2	dB	Gain=+20dB to -20dB f=1KHz
TREBLE	Maximum Boost Gain	G_{T_BST}	18	20	22	dB	Gain=+20dB f=10kHz V_{IN}=100mVrms G_T=20log (V_{OUT}/V_{IN})
	Maximum Cut Gain	G_{T_CUT}	-22	-20	-18	dB	Gain=-20dB f=10kHz V_{IN}=2Vrms G_T=20log (V_{OUT}/V_{IN})
	Gain Set Error	G_{T_ERR}	-2	0	+2	dB	Gain=+20dB to -20dB f=10kHz
FADER / SUBWOOFER	Maximum Boost Gain	G_{F_BST}	13	15	17	dB	Fader=15dB V_{IN}=100mVrms G_F=20log(V_{OUT}/V_{IN})
	Maximum Attenuation *	G_{F_MIN}	-	-100	-90	dB	Fader = -∞dB G_F=20log(V_{OUT}/V_{IN}) BW = IHF-A
	Gain Set Error	G_{F_ERR}	-2	0	+2	dB	Gain=+15dB to +1dB
	Attenuation Set Error 1	G_{F_ERR1}	-2	0	+2	dB	ATT=-1dB to -15dB
	Attenuation Set Error 2	G_{F_ERR2}	-3	0	+3	dB	ATT=-16dB to -47dB
	Attenuation Set Error 3	G_{F_ERR3}	-4	0	+4	dB	ATT=-48dB to -79dB
	Output Impedance	R_{OUT}	-	-	50	Ω	V_{IN} =100mVrms
	Maximum Output Voltage	V_{OM}	2	2.2	-	Vrms	THD+N=1% BW=400Hz-30KHz
LOUDNESS	Maximum Gain	G_{L_MAX}	17	20	23	dB	Gain 20dB V_{IN}=100mVrms G_L=20log(V_{OUT}/V_{IN})
	Gain Set Error	G_{L_ERR}	-2	0	+2	dB	GAIN=+20dB to +1dB
Level meter	Maximum Output Voltage	V_{L_MAX}	2.8	3.1	3.5	V	
	Output Offset Voltage	V_{L_OFF}	-	0	100	mV	

VP-9690A(Average value detection, effective value display) filter by Matsushita Communication is used for * measurement.
Phase between input / output is same.

© 2015 ROHM Co., Ltd. All rights reserved.

Typical Performance Curves

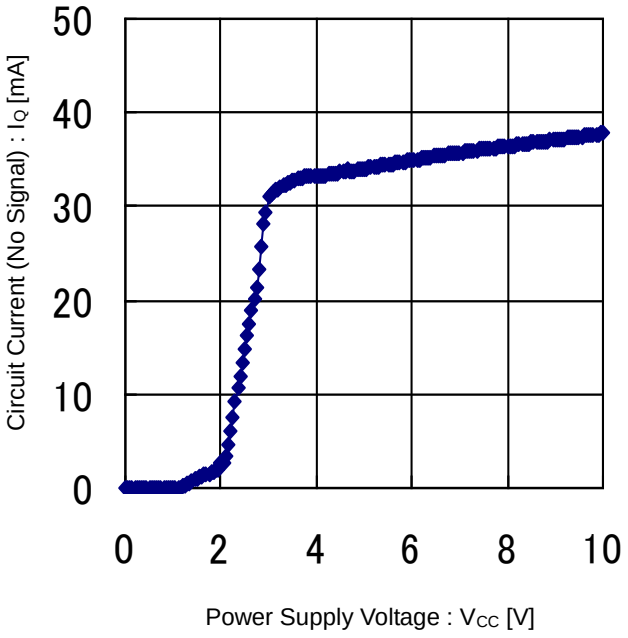

Figure 1. Circuit Current (No Signal) vs Power Supply Voltage

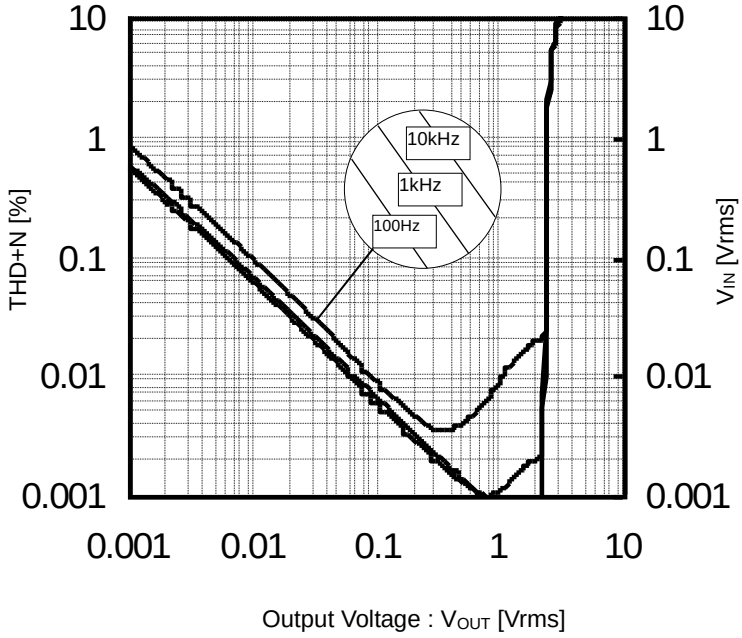

Figure 2. THD+N vs Output Voltage

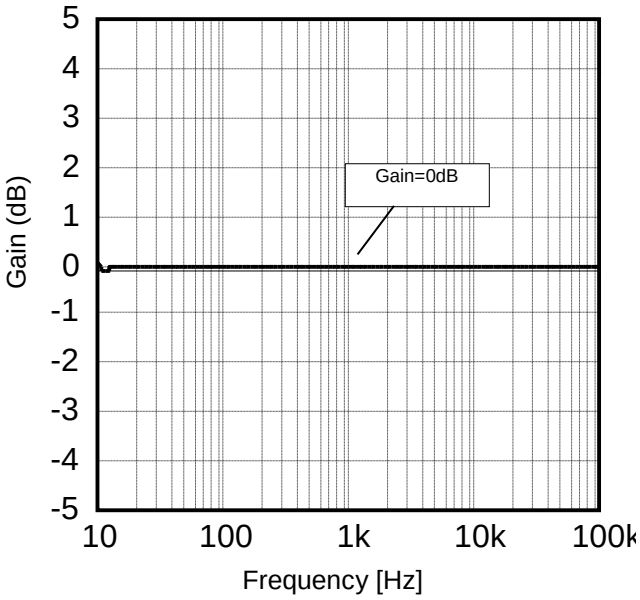

Figure 3. Gain vs Frequency

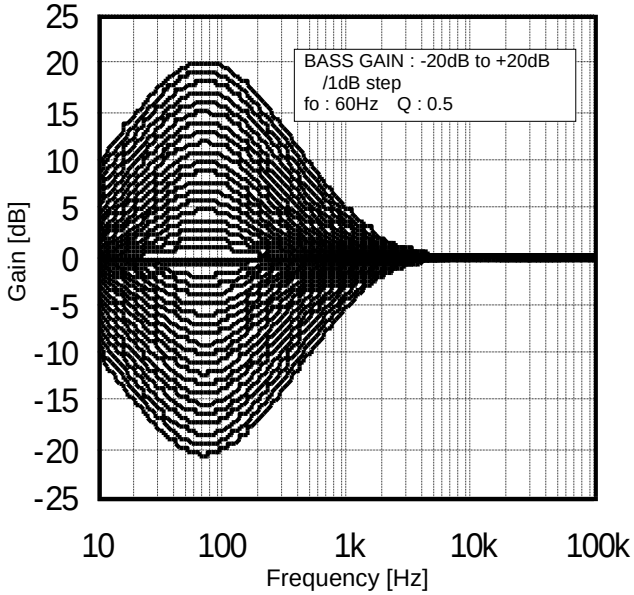

Figure 4. Bass Gain vs Frequency

© 2015 ROHM Co., Ltd. All rights reserved.

Typical Performance Curves – continued

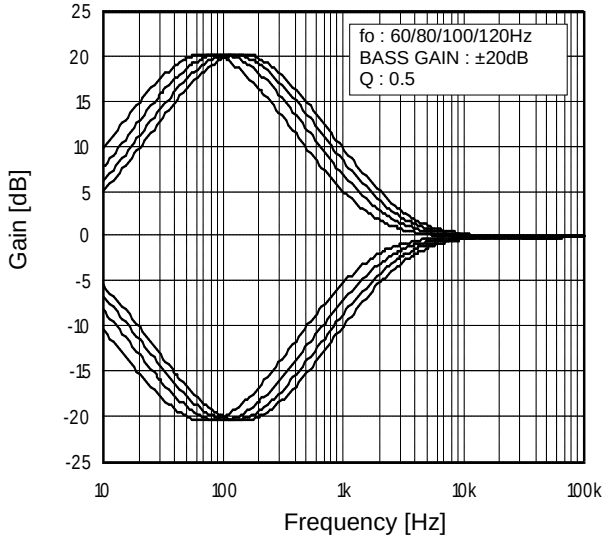

Figure 5. Bass fo vs Frequency

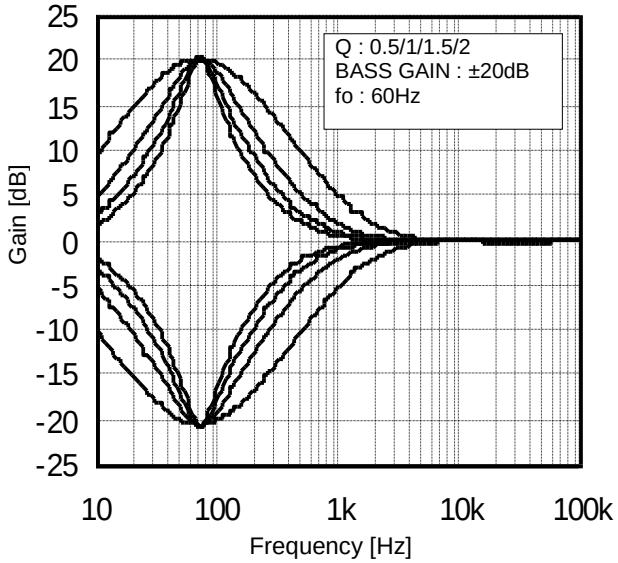

Figure 6. Bass Q vs Frequency

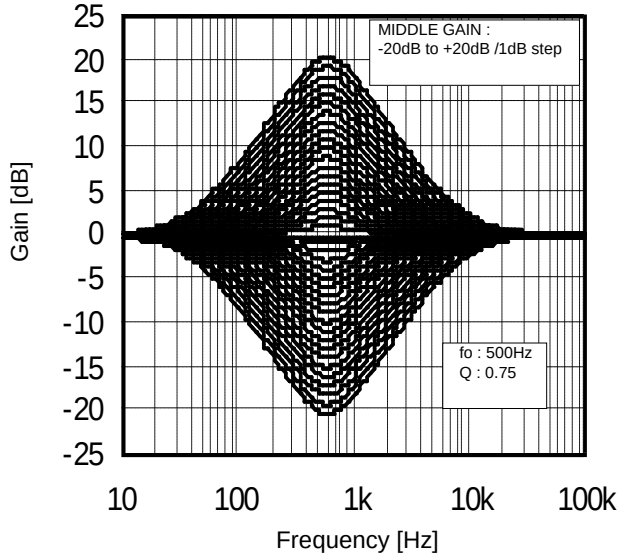

Figure 7. Middle Gain vs Frequency

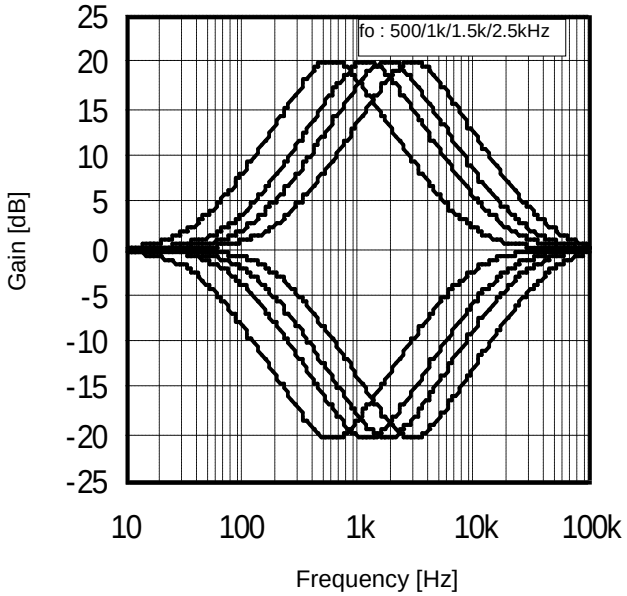

Figure 8. Middle fo vs Frequency

© 2015 ROHM Co., Ltd. All rights reserved.

Typical Performance Curves – continued

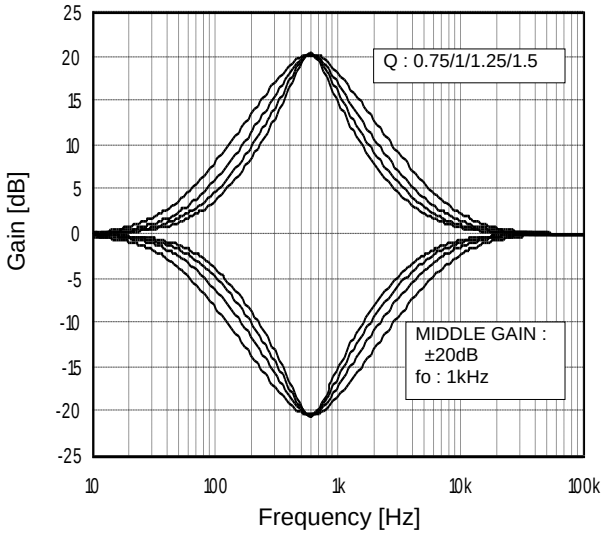

Figure 9. Middle Q vs Frequency

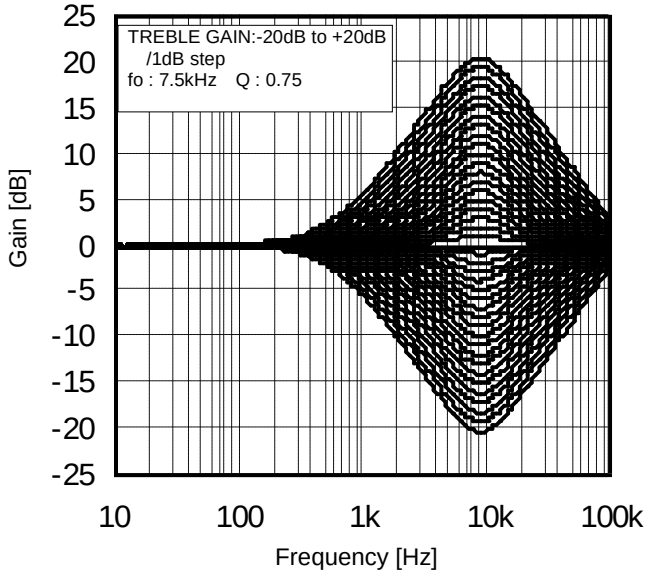

Figure 10. Treble Gain vs Frequency

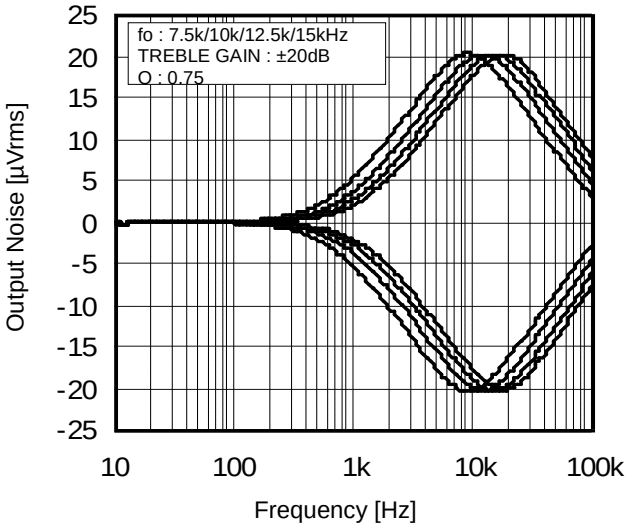

Figure 11. Treble fo vs Frequency

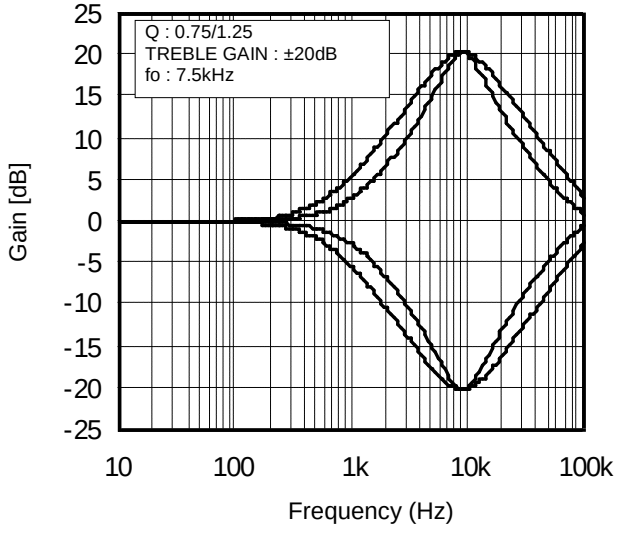

Figure 12. Treble Q vs Frequency

© 2015 ROHM Co., Ltd. All rights reserved.

Typical Performance Curves – continued

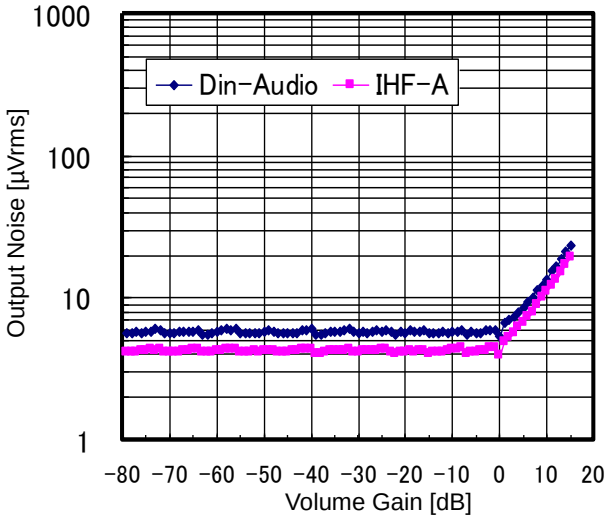

Figure 13. Output Noise vs Volume Gain

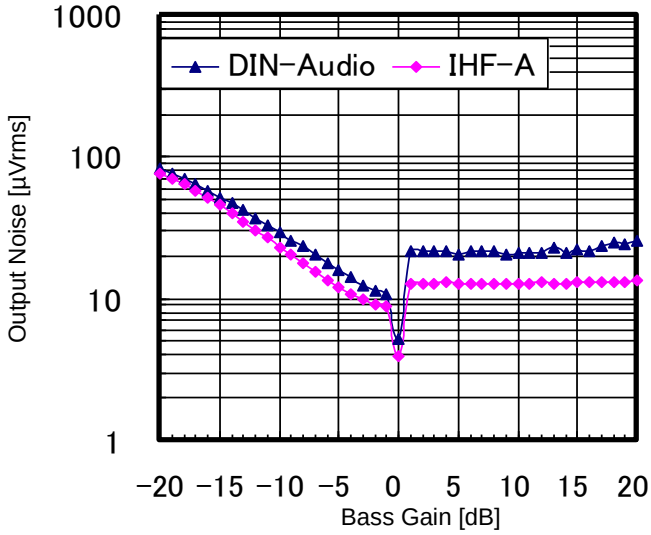

Figure 14. Output Noise vs Bass Gain

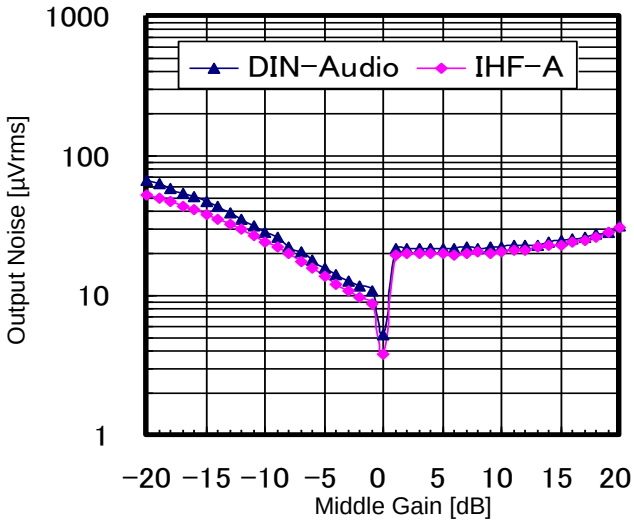

Figure 15. Output Noise vs Middle Gain

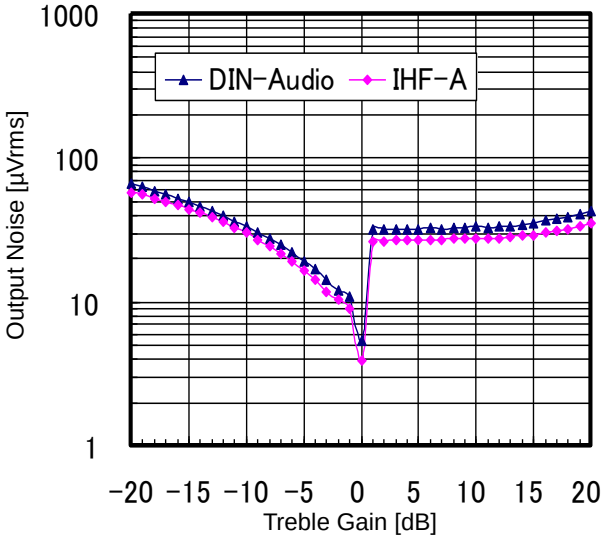

Figure 16. Output Noise vs Treble Gain

© 2015 ROHM Co., Ltd. All rights reserved.

Typical Performance Curves – continued

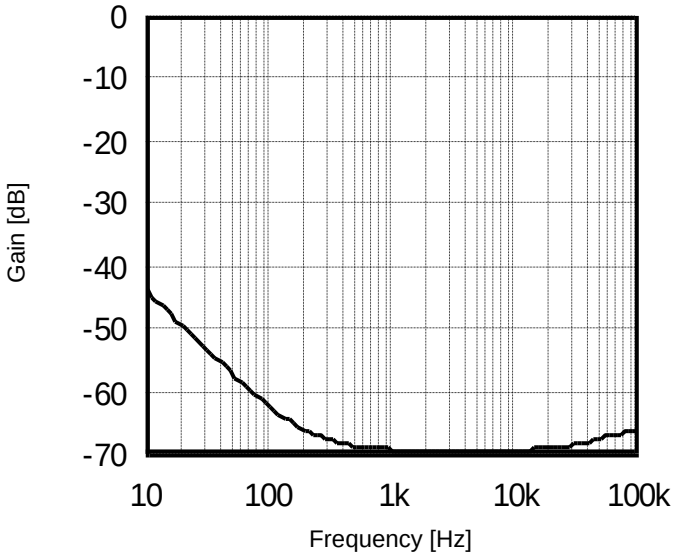

Figure 17. CMRR vs Frequency

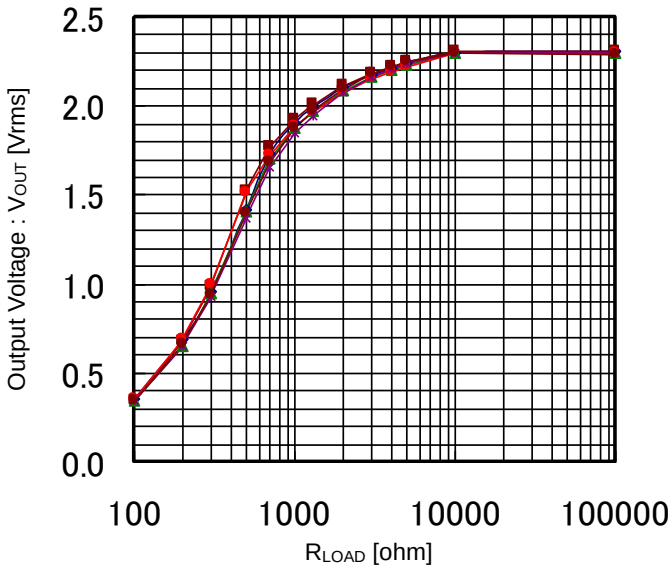

Figure 18. Output Voltage vs R_{LOAD}

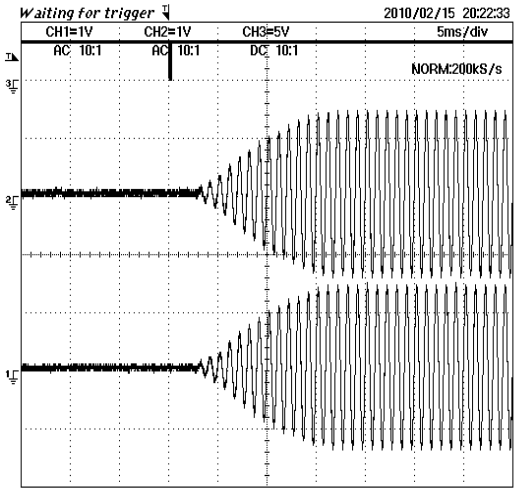

Figure 19. Advanced Switch 1

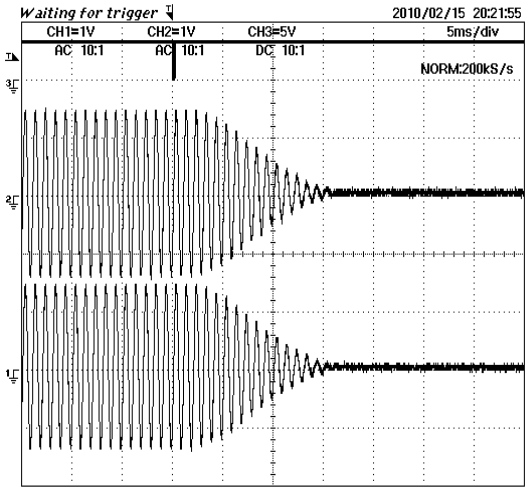

Figure 20. Advanced Switch 2

© 2015 ROHM Co., Ltd. All rights reserved.

Typical Performance Curves – continued

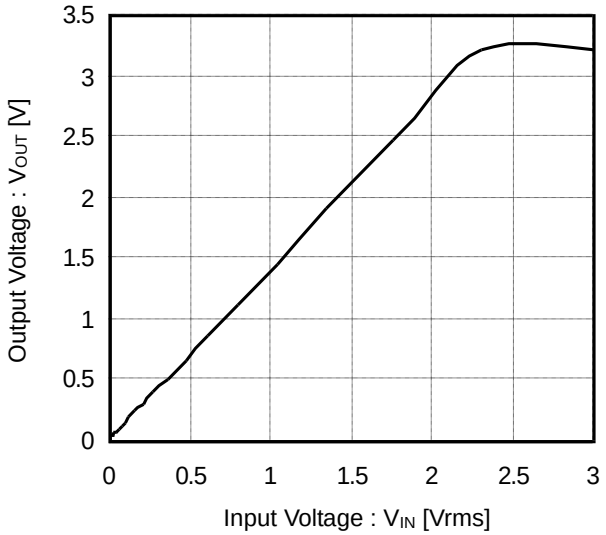

Figure 21. Output Voltage vs Level Meter V_{IN}

© 2015 ROHM Co., Ltd. All rights reserved.

Timing Chart

Control Signal Specification

(1) Electrical Specifications and Timing for Bus Lines and I/O Stages

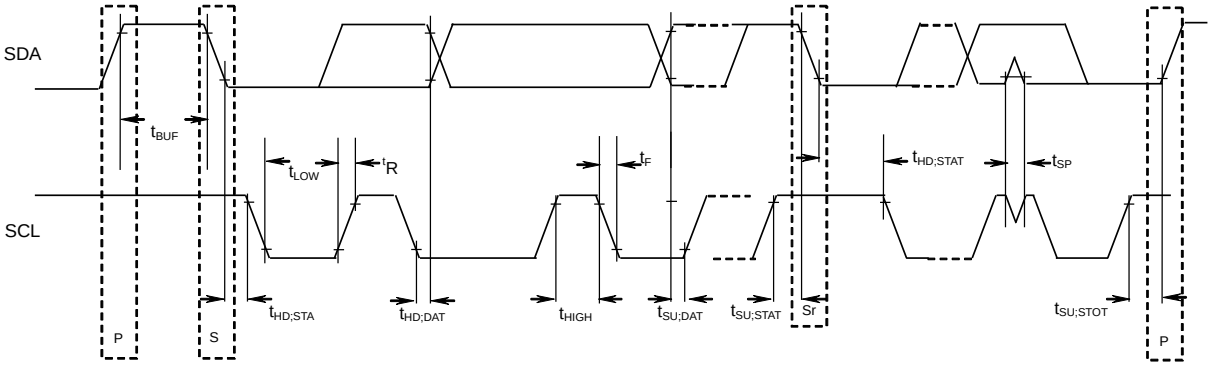

Figure 22. Definition of Timing on the I²C-bus

Table 1 Characteristics of the SDA and SCL bus lines for I²C-bus devices
(Unless specified otherwise, Ta=25°C, V_{CC}=8.5V)

Parameter		Symbol	Fast-mode I²C-bus		Unit
			Min	Max	
1	SCL clock frequency	f_{SCL}	0	400	kHz
2	Bus free time between a STOP and START condition	t_{BUF}	1.3	-	μS
3	Hold time (repeated) START condition. After this period, the first clock pulse is generated	$t_{HD;STA}$	0.6	-	μS
4	LOW period of the SCL clock	t_{LOW}	1.3	-	μS
5	HIGH period of the SCL clock	t_{HIGH}	0.6	-	μS
6	Set-up time for a repeated START condition	$t_{SU;STA}$	0.6	-	μS
7	Data hold time:	$t_{HD;DAT}$	0.06(Note)	-	μS
8	Data set-up time	$t_{SU;DAT}$	120	-	ns
9	Set-up time for STOP condition	$t_{SU;STO}$	0.6	-	μS

All values are referred to VIH min and VIL max Levels (see Table 2).

(Note) The device must internally provide a hold time of at least 300 ns for the SDA signal (refer to the VIH min of the SCL signal) in order to bridge the undefined region of the falling edge of SCL.
For 7($t_{HD;DAT}$) and 8($t_{SU;DAT}$), make the setup in which the margin is fully in .

Table 2 Characteristics of the SDA and SCL I/O stages for I²C-bus devices

Parameter		Symbol	Fast-mode devices		Unit
			Min	Max	
10	LOW level input voltage:	V_{IL}	-0.3	+1	V
11	HIGH level input voltage:	V_{IH}	2.3	5	V
12	Pulse width of spikes which must be suppressed by the input filter.	t_{SP}	0	50	ns
13	LOW level output voltage: at 3mA sink current	V_{OL1}	0	0.4	V
14	Input current each I/O pin with an input voltage between 0.4V and 4.5V.	I_I	-10	+10	μA

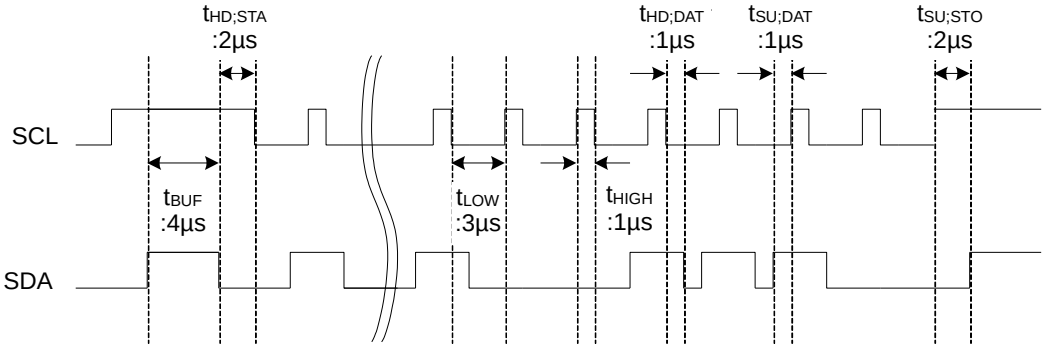

SCL clock frequency : 250 kHz

Figure 23. A Command Timing Example in the I²C Data Transmission

© 2015 ROHM Co., Ltd. All rights reserved.

(2) I²C BUS FORMAT

	MSB LSB		MSB LSB		MSB LSB		
S	Slave Address	A	Select Address	A	Data	A	P
1bit	8bit	1bit	8bit	1bit	8bit	1bit	1bit

S = Start condition (Recognition of start bit)
Slave Address = Recognition of slave address. The first 7 bits corresponds to slave address.. The least significant bit is “L” corresponds to write mode.
A = ACKNOWLEDGE bit (Recognition of acknowledgement)
Select Address = Select address for volume, bass and treble.
Data = Data on every volume and tone.
P = Stop condition (Recognition of stop bit)

(3) I²C BUS Interface Protocol

(a) Basic form

S	Slave Address	A	Select Address	A	Data	A	P
	MSB LSB		MSB LSB		MSB LSB		

(b) Automatic increment (Select Address increases (+1) according to the number of data.

S	Slave Address	A	Select Address	A	Data1	A	Data2	A	· · · ·	DataN	A	P
	MSB LSB		MSB LSB		MSB LSB		MSB LSB			MSB LSB		

(Example) ①Data1 shall be set as data of address specified by Select Address.
②Data2 shall be set as data of address specified by Select Address +1.
③DataN shall be set as data of address specified by Select Address +N-1.

(c) Configuration unavailable for transmission (In this case, only Select Address1 is set.

S	Slave Address	A	Select Address1	A	Data	A	Select Address 2	A	Data	A	P
	MSB LSB		MSB LSB		MSB LSB		MSB LSB		MSB LSB		

(Note) If any data is transmitted as Select Address 2 next to data, it is recognized as data, not as Select Address 2.

(4) Slave address

MSB							LSB	
A6	A5	A4	A3	A2	A1	A0	R/W	
1	0	0	0	0	0	0	0	80H

© 2015 ROHM Co., Ltd. All rights reserved.

(5) Select Address & Data

Items	Select Address (hex)	MSB			Data				LSB
		D7	D6	D5	D4	D3	D2	D1	D0
Initial setup 1	01	Advanced switch ON/OFF	0	Advanced switch time of Input Gain/Volume Tone/Fader/Loudness		0	0	Advanced switch time of Mute	
Initial setup 2	02	LPF Phase	Level Meter RESET	0	0	0	Subwoofer LPF fc	LPF Phase	Level Meter RESET
Initial setup 3	03	0	0	0	Loudness fo		0	0	1
Input Selector	05	0	0	0	Input selector				
Input gain	06	Mute ON/OFF	0	0	Input Gain				
Volume gain	20	Volume Gain / Attenuation							
Fader 1ch Front	28	Fader Gain / Attenuation							
Fader 2ch Front	29	Fader Gain / Attenuation							
Fader 1ch Rear	2A	Fader Gain / Attenuation							
Fader 2ch Rear	2B	Fader Gain / Attenuation							
Fader Subwoofer	2C	Fader Gain / Attenuation							
Bass setup	41	0	0	Bass fo		0	0	Bass Q	
Middle setup	44	0	0	Middle fo		0	0	Middle Q	
Treble setup	47	0	0	Treble fo		0	0	0	Treble Q
Bass gain	51	Bass Boost/ Cut	0	0	Bass Gain				
Middle gain	54	Middle Boost/ Cut	0	0	Middle Gain				
Treble gain	57	Treble Boost/ Cut	0	0	Treble Gain				
Loudness Gain	75	0	Loudness HiCut		Loudness Gain				
System Reset	FE	1	0	0	0	0	0	0	1

Advanced switch

Note

1. The advance switch works in the latch part while changing from one function to another.

2. Upon continuous data transfer, the Select Address rolls back to the first address on automatic increment function, as shown below.

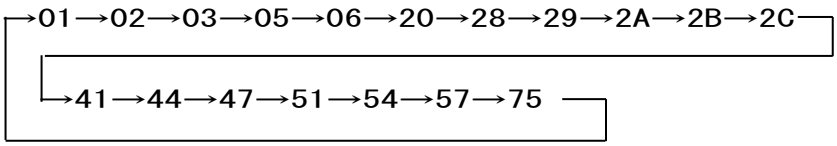

3. Advanced switch is not used for the function of input selector. Therefore, please turn on MUTE when changing the settings of this side of a set.

4. When using Mute function when changing input selector, please switch Mute ON/OFF for waiting advanced-mute time.

© 2015 ROHM Co., Ltd. All rights reserved.

Select address 01 (hex)

Time	MSB Advanced switch time of Mute LSB							
	D7	D6	D5	D4	D3	D2	D1	D0
0.6msec	Advanced Switch ON/OFF	0	Advanced switch time of Input gain/Volume Tone/Fader/Loudness		0	0	0	0
1.0msec							0	1
1.4msec							1	0
3.2msec							1	1

Time	MSB Advanced switch time of Input gain/Volume/Tone/Fader/Loudness LSB							
	D7	D6	D5	D4	D3	D2	D1	D0
4.7 msec	Advanced Switch ON/OFF	0	0	0	0	0	Advanced switch Time of Mute	
7.1 msec			0	1				
11.2 msec			1	0				
14.4 msec			1	1				

Mode	MSB Advanced switch ON/OFF LSB							
	D7	D6	D5	D4	D3	D2	D1	D0
OFF	0	0	Advanced switch time of Input gain/Volume Tone/Fader/Loudness		0	0	Advanced switch Time of Mute	
ON	1							

Select address 02(hex)

fc	MSB Subwoofer LPF fc LSB							
	D7	D6	D5	D4	D3	D2	D1	D0
OFF	LPF Phase	Level Meter RESET	0	0	0	0	0	0
55Hz						0	0	1
85Hz						0	1	0
120Hz						0	1	1
160Hz						1	0	0
Prohibition						Other setting		

Mode	MSB Level Meter RESET LSB							
	D7	D6	D5	D4	D3	D2	D1	D0
HOLD	LPF Phase	0	0	0	0	Subwoofer LPF fc		
RESET		1						

Phase	MSB LPF Phase LSB							
	D7	D6	D5	D4	D3	D2	D1	D0
0°	0	Level Meter RESET	0	0	0	Subwoofer LPF fc		
180°	1							

Select address 03(hex)

f0	MSB Loudness fo LSB							
	D7	D6	D5	D4	D3	D2	D1	D0
250Hz	0	0	0	0	0	0	0	1
400Hz				0	1			
800Hz				1	0			
Prohibition				1	1			

: Initial condition

© 2015 ROHM Co., Ltd. All rights reserved.

Select address 05(hex)

Mode	OUT F1/R1	OUT F2/R2	MSB			Input Selector			LSB
			D7	D6	D5	D4	D3	D2	D1	D0
Initial			0	0	0	0	0	0	0	0
A	A1	A2					0	0	0	1
B	B1	B2					0	0	1	0
C diff	CP1	CP2					0	1	1	0
D	D1	D2					1	0	1	0
E	E1	E2					1	0	1	1
Input SHORT							1	0	0	1
Prohibition							Other setting			

Input SHORT : The input impedance of each input terminal is lowered from 100kΩ(Typ) to 6 kΩ(Typ).
(For quick charge of coupling capacitor)

Select address 06 (hex)

Gain	MSB			Input Gain				LSB
	D7	D6	D5	D4	D3	D2	D1	D0
0dB	Mute ON/OFF	0	0	0	0	0	0	0
1dB				0	0	0	0	1
2dB				0	0	0	1	0
3dB				0	0	0	1	1
4dB				0	0	1	0	0
5dB				0	0	1	0	1
6dB				0	0	1	1	0
7dB				0	0	1	1	1
8dB				0	1	0	0	0
9dB				0	1	0	0	1
10dB				0	1	0	1	0
11dB				0	1	0	1	1
12dB				0	1	1	0	0
13dB				0	1	1	0	1
14dB				0	1	1	1	0
15dB				0	1	1	1	1
16dB				1	0	0	0	0
17dB				1	0	0	0	1
18dB				1	0	0	1	0
19dB				1	0	0	1	1
20dB				1	0	1	0	0
Prohibition				1	1	0	1	1
				:	:	:	:	:
				1	1	1	1	1

Mode	MSB			Mute ON/OFF				LSB
	D7	D6	D5	D4	D3	D2	D1	D0
OFF	0	0	0	Input Gain				
ON	1							

: Initial condition

© 2015 ROHM Co., Ltd. All rights reserved.

Select address 20, 28, 29, 2A, 2B, 2C (hex)

Gain & ATT	MSB Vol, Fader Gain / Attenuation LSB							
	D7	D6	D5	D4	D3	D2	D1	D0
Prohibition	0	0	0	0	0	0	0	0
	0	0	0	0	0	0	0	1
	:	:	:	:	:	:	:	:
	0	1	1	1	0	0	0	0
15dB	0	1	1	1	0	0	0	1
14dB	0	1	1	1	0	0	1	0
13dB	0	1	1	1	0	0	1	1
:	:	:	:	:	:	:	:	:
-77dB	1	1	0	0	1	1	0	1
-78dB	1	1	0	0	1	1	1	0
-79dB	1	1	0	0	1	1	1	1
Prohibition	1	1	0	1	0	0	0	0
	:	:	:	:	:	:	:	:
	1	1	1	1	1	1	1	0
-∞dB	1	1	1	1	1	1	1	1

Select address 41(hex)

Q factor	MSB Bass Q factor LSB							
	D7	D6	D5	D4	D3	D2	D1	D0
0.5	0	0	Bass fo		0	0	0	0
1.0							0	1
1.5							1	0
2.0							1	1

fo	MSB Bass fo LSB							
	D7	D6	D5	D4	D3	D2	D1	D0
60Hz	0	0	0	0	0	0	Bass Q factor	
80Hz			0	1				
100Hz			1	0				
120Hz			1	1				

Select address 44(hex)

Q factor	MSB Middle Q factor LSB							
	D7	D6	D5	D4	D3	D2	D1	D0
0.75	0	0	Middle fo		0	0	0	0
1.0							0	1
1.25							1	0
1.5							1	1

fo	MSB Middle fo LSB							
	D7	D6	D5	D4	D3	D2	D1	D0
500Hz	0	0	0	0	0	0	Middle Q factor	
1kHz			0	1				
1.5kHz			1	0				
2.5kHz			1	1				

: Initial condition

© 2015 ROHM Co., Ltd. All rights reserved.

Select address 47 (hex)

Q factor	MSB			Treble Q factor				LSB
	D7	D6	D5	D4	D3	D2	D1	D0
0.75	0	0	Treble fo		0	0	0	0
1.25								1

fo	MSB			Treble fo				LSB
	D7	D6	D5	D4	D3	D2	D1	D0
7.5kHz	0	0	0	0	0	0	0	Treble Q factor
10kHz			0	1				
12.5kHz			1	0				
15kHz			1	1				

Select address 51, 54, 57 (hex)

Gain	MSB			Bass/ Middle/ Treble Gain				LSB
	D7	D6	D5	D4	D3	D2	D1	D0
0dB	Bass/ Middle/ Treble Boost /Cut	0	0	0	0	0	0	0
1dB				0	0	0	0	1
2dB				0	0	0	1	0
3dB				0	0	0	1	1
4dB				0	0	1	0	0
5dB				0	0	1	0	1
6dB				0	0	1	1	0
7dB				0	0	1	1	1
8dB				0	1	0	0	0
9dB				0	1	0	0	1
10dB				0	1	0	1	0
11dB				0	1	0	1	1
12dB				0	1	1	0	0
13dB				0	1	1	0	1
14dB				0	1	1	1	0
15dB				0	1	1	1	1
16dB				1	0	0	0	0
17dB				1	0	0	0	1
18dB				1	0	0	1	0
19dB				1	0	0	1	1
20dB				1	0	1	0	0
Prohibition				1	0	1	0	1
				:	:	:	:	:
				1	1	1	1	0
				1	1	1	1	1

Mode	MSB			Bass/ Middle/ Treble Boost/Cut				LSB
	D7	D6	D5	D4	D3	D2	D1	D0
Boost	0	0	0	Bass/Middle/Treble Gain				
Cut	1							

: Initial condition

© 2015 ROHM Co., Ltd. All rights reserved.

Select address 75 (hex)

Mode	MSB			Loudness HiCut				LSB
	D7	D6	D5	D4	D3	D2	D1	D0
HiCut1	0	0	0	Loudness Gain				
HiCut2		0	1					
HiCut3		1	0					
HiCut4		1	1					

Gain	MSB			Loudness Gain				LSB
	D7	D6	D5	D4	D3	D2	D1	D0
0dB	0	Loudness HiCut		0	0	0	0	0
1dB				0	0	0	0	1
2dB				0	0	0	1	0
3dB				0	0	0	1	1
4dB				0	0	1	0	0
5dB				0	0	1	0	1
6dB				0	0	1	1	0
7dB				0	0	1	1	1
8dB				0	1	0	0	0
9dB				0	1	0	0	1
10dB				0	1	0	1	0
11dB				0	1	0	1	1
12dB				0	1	1	0	0
13dB				0	1	1	0	1
14dB				0	1	1	1	0
15dB				0	1	1	1	1
16dB				1	0	0	0	0
17dB				1	0	0	0	1
18dB				1	0	0	1	0
19dB				1	0	0	1	1
20dB				1	0	1	0	0
Prohibition				1	0	1	0	1
				:	:	:	:	:
				1	1	1	1	1

: Initial condition

(6) About Power ON Reset

The IC has a built-in initialization circuit that triggers at power ON of supply voltage. Please send initial data to all addresses at supply voltage ON. Also, please turn ON MUTE at the set side until this initial data is sent.

Parameter	Symbol	Limit			Unit	Conditions
		Min	Typ	Max		
Rise Time of VCC	t_{RISE}	33	-	-	µsec	V_{CC} rise time from 0V to 5V
VCC Voltage of Release Power ON Reset	V_{POR}	-	4.1	-	V	

(7) About External Compulsory Mute Terminal

It is possible to forcibly set Mute externally by setting the input voltage at the MUTE terminal.

Mute Voltage Condition	Mode
GND to 1.0V	MUTE ON
2.3V to V_{CC}	MUTE OFF

Establish the voltage of MUTE in the condition to be defined.

© 2015 ROHM Co., Ltd. All rights reserved.

Application Information

1. Function and Specifications

Function	Specifications
Input selector	・ Stereo 4 input ・ Differential 1 input
Input gain	・ +20dB to 0dB (1dB step) ・ Possible to use “Advanced switch” for prevention of switching noise.
Mute	・ Possible to use “Advanced switch” for prevention of switching noise.
Volume	・ +15dB to -79dB (1dB step), -∞dB ・ Possible to use “Advanced switch” for prevention of switching noise.
Bass	・ +20dB to -20dB (1dB step) ・ Q=0.5, 1, 1.5, 2 variable ・ fo=60, 80, 100, 120Hz ・ Possible to use “Advanced switch” at changing gain
Middle	・ +20dB to -20dB (1dB step) ・ Q=0.75, 1, 1.25, 1.5 variable ・ fo=500, 1k, 1.5k, 2.5kHz variable ・ Possible to use “Advanced switch” when changing gain
Treble	・ +20dB to -20dB (1dB step) ・ Q=0.75, 1.25 variable ・ fo=7.5k, 10k, 12.5k, 15kHz variable ・ Possible to use “Advanced switch” when changing gain
Fader	・ +15dB to -79dB(1dB step), -∞dB ・ Possible to use “Advanced switch” for prevention of switching noise.
Loudness	・ 20dB to 0dB(1dB step) ・ fo=250/400/800Hz ・ Possible to use “Advanced switch” for prevention of switching noise.
LPF	・ fc=55/85/120/160Hz, pass ・ Phase shift (0°/180°)
Level meter	・ I^2C BUS control ・ DC Output

© 2015 ROHM Co., Ltd. All rights reserved.

2. Volume / Fader Volume Attenuation Data

(dB)	D7	D6	D5	D4	D3	D2	D1	D0		(dB)	D7	D6	D5	D4	D3	D2	D1	D0
+15	0	1	1	1	0	0	0	1		-33	1	0	1	0	0	0	0	1
+14	0	1	1	1	0	0	1	0		-34	1	0	1	0	0	0	1	0
+13	0	1	1	1	0	0	1	1		-35	1	0	1	0	0	0	1	1
+12	0	1	1	1	0	1	0	0		-36	1	0	1	0	0	1	0	0
+11	0	1	1	1	0	1	0	1		-37	1	0	1	0	0	1	0	1
+10	0	1	1	1	0	1	1	0		-38	1	0	1	0	0	1	1	0
+9	0	1	1	1	0	1	1	1		-39	1	0	1	0	0	1	1	1
+8	0	1	1	1	1	0	0	0		-40	1	0	1	0	1	0	0	0
+7	0	1	1	1	1	0	0	1		-41	1	0	1	0	1	0	0	1
+6	0	1	1	1	1	0	1	0		-42	1	0	1	0	1	0	1	0
+5	0	1	1	1	1	0	1	1		-43	1	0	1	0	1	0	1	1
+4	0	1	1	1	1	1	0	0		-44	1	0	1	0	1	1	0	0
+3	0	1	1	1	1	1	0	1		-45	1	0	1	0	1	1	0	1
+2	0	1	1	1	1	1	1	0		-46	1	0	1	0	1	1	1	0
+1	0	1	1	1	1	1	1	1		-47	1	0	1	0	1	1	1	1
0	1	0	0	0	0	0	0	0		-48	1	0	1	1	0	0	0	0
-1	1	0	0	0	0	0	0	1		-49	1	0	1	1	0	0	0	1
-2	1	0	0	0	0	0	1	0		-50	1	0	1	1	0	0	1	0
-3	1	0	0	0	0	0	1	1		-51	1	0	1	1	0	0	1	1
-4	1	0	0	0	0	1	0	0		-52	1	0	1	1	0	1	0	0
-5	1	0	0	0	0	1	0	1		-53	1	0	1	1	0	1	0	1
-6	1	0	0	0	0	1	1	0		-54	1	0	1	1	0	1	1	0
-7	1	0	0	0	0	1	1	1		-55	1	0	1	1	0	1	1	1
-8	1	0	0	0	1	0	0	0		-56	1	0	1	1	1	0	0	0
-9	1	0	0	0	1	0	0	1		-57	1	0	1	1	1	0	0	1
-10	1	0	0	0	1	0	1	0		-58	1	0	1	1	1	0	1	0
-11	1	0	0	0	1	0	1	1		-59	1	0	1	1	1	0	1	1
-12	1	0	0	0	1	1	0	0		-60	1	0	1	1	1	1	0	0
-13	1	0	0	0	1	1	0	1		-61	1	0	1	1	1	1	0	1
-14	1	0	0	0	1	1	1	0		-62	1	0	1	1	1	1	1	0
-15	1	0	0	0	1	1	1	1		-63	1	0	1	1	1	1	1	1
-16	1	0	0	1	0	0	0	0		-64	1	1	0	0	0	0	0	0
-17	1	0	0	1	0	0	0	1		-65	1	1	0	0	0	0	0	1
-18	1	0	0	1	0	0	1	0		-66	1	1	0	0	0	0	1	0
-19	1	0	0	1	0	0	1	1		-67	1	1	0	0	0	0	1	1
-20	1	0	0	1	0	1	0	0		-68	1	1	0	0	0	1	0	0
-21	1	0	0	1	0	1	0	1		-69	1	1	0	0	0	1	0	1
-22	1	0	0	1	0	1	1	0		-70	1	1	0	0	0	1	1	0
-23	1	0	0	1	0	1	1	1		-71	1	1	0	0	0	1	1	1
-24	1	0	0	1	1	0	0	0		-72	1	1	0	0	1	0	0	0
-25	1	0	0	1	1	0	0	1		-73	1	1	0	0	1	0	0	1
-26	1	0	0	1	1	0	1	0		-74	1	1	0	0	1	0	1	0
-27	1	0	0	1	1	0	1	1		-75	1	1	0	0	1	0	1	1
-28	1	0	0	1	1	1	0	0		-76	1	1	0	0	1	1	0	0
-29	1	0	0	1	1	1	0	1		-77	1	1	0	0	1	1	0	1
-30	1	0	0	1	1	1	1	0		-78	1	1	0	0	1	1	1	0
-31	1	0	0	1	1	1	1	1		-79	1	1	0	0	1	1	1	1
-32	1	0	1	0	0	0	0	0		-∞	1	1	1	1	1	1	1	1

: Initial condition

© 2015 ROHM Co., Ltd. All rights reserved.

(1) About Level Meter

(a) The Operation of Circuit
Level meter is a function which gives DC voltage proportional to the size of signal of sound. It detects the peak level of signal and keeps the peak level, so that it is possible to monitor the size of signal by resetting DC voltage kept with suitable interval.

(b) The Way to Reset Level Meter Output
Please send reset data through I^2C BUS
To reset output of level meter : Send D6 = “ 1 “ of select address 02(hex).
To cancel output reset of level meter (HOLD)… to Send D6 = “ 0 “ of select address 02(hex).

(c) The Settings About Period of Reset
Peak hold operation will start after HOLD data is transmitted. Set the WAIT time after HOLD data transmission according to the frequency bandwidth detected.
WAIT time must be set to a minimum of one cycle over the detected frequency bandwidth.
Ex) Detected frequency bandwidth is above 40Hz, 『40Hz = 25ms = WAIT time』

Transmission Example by I^2C BUS

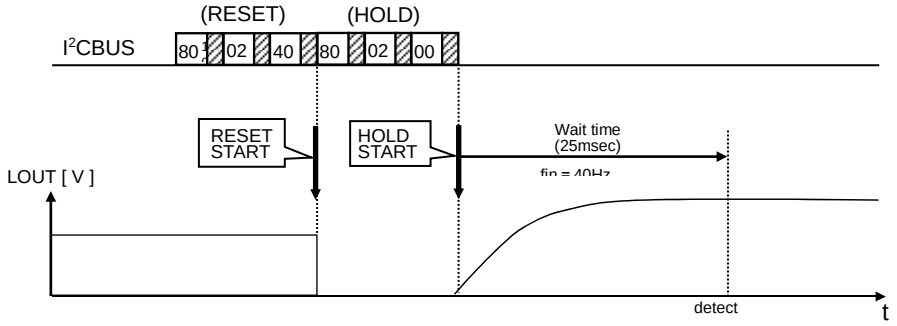

© 2015 ROHM Co., Ltd. All rights reserved.

3. Application Circuit

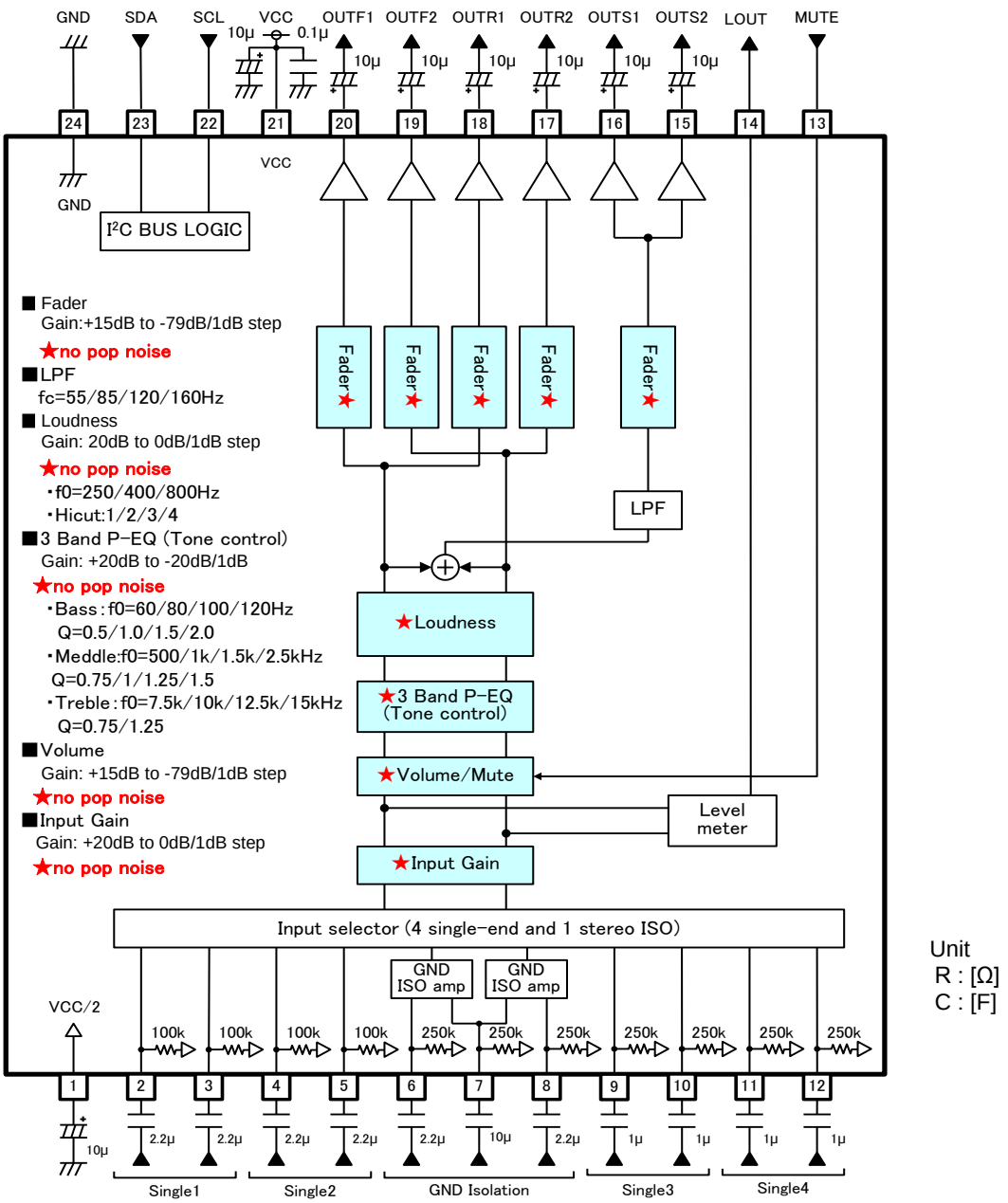

Notes on wiring

① Please connect the decoupling capacitor of a power supply in the shortest distance as much as possible to GND.
② GND lines should be one-point connected.
③ Wiring pattern of Digital should be away from that of analog unit and crosstalk is not acceptable.
④ Lines of SCL and SDA of I²C BUS should not be parallel if possible.
The lines should be shielded, if they are adjacent to each other.
⑤ Analog input lines should not be parallel if possible. The lines should be shielded if they are adjacent to each other.

© 2015 ROHM Co., Ltd. All rights reserved.

Power Dissipation

About the thermal design of the IC

Characteristics of an IC are greatly affected by the temperature at which it is used. Exceeding absolute maximum ratings may degrade and destroy the device. Careful consideration must be given to the heat of the IC from the two standpoints of immediate damage and long-term reliability of operation..

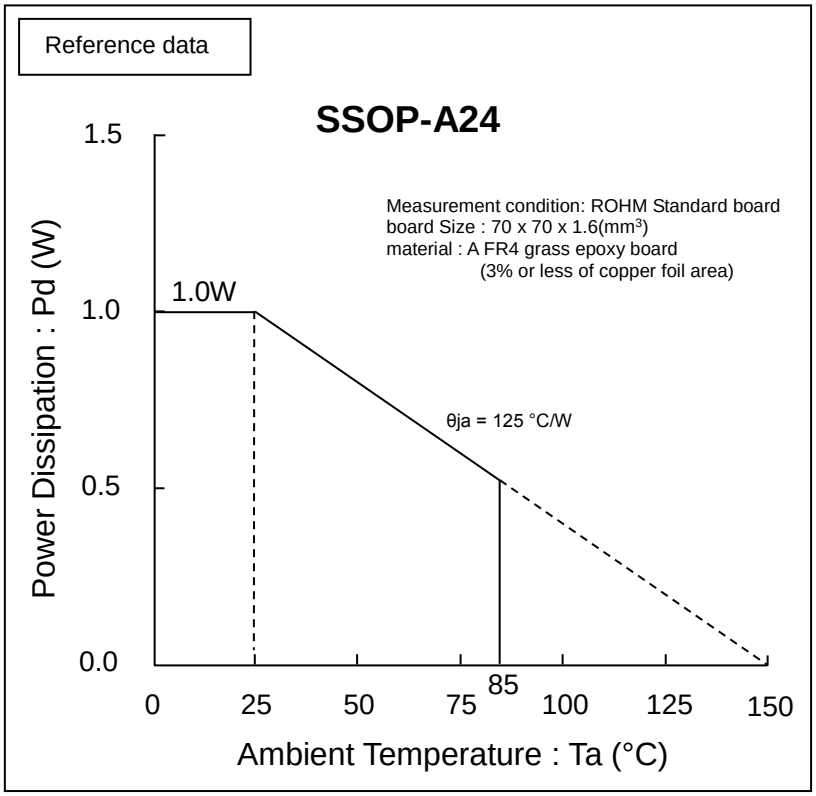

Figure 24. Temperature Derating Curve

(Note) Values are actual measurements and are not guaranteed.

Power dissipation values vary according to the board on which the IC is mounted.

© 2015 ROHM Co., Ltd. All rights reserved.

I/O Equivalent Circuits

Pin No.	Pin Name	Pin Voltage	Equivalent Circuit	Pin Description
2 3 4 5	A1 A2 B1 B2	4.25	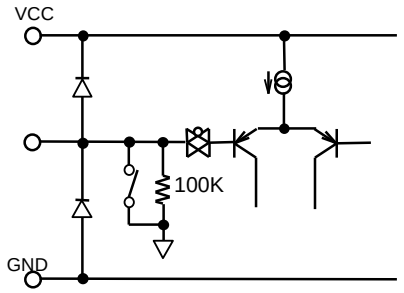	A terminal for signal input. The input impedance is 100kΩ(typ).
6 7 8 9 10 11 12	CP1 CN CP2 D1 D2 E1 E2	4.25	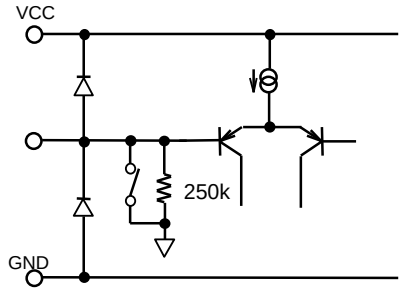	A terminal for signal input. The input impedance is 250kΩ(typ).
13	MUTE	-	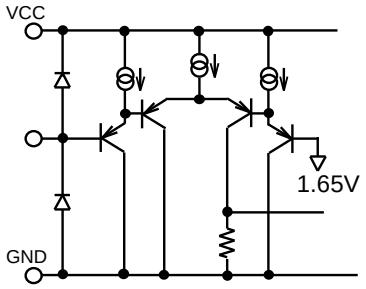	A terminal for external compulsory mute. If terminal voltage is High level, the mute is OFF. If the terminal voltage is Low level, the Mute is ON.
16 17 18 19 20	OUTS1 OUTR2 OUTR1 OUTF2 OUTF1	4.25	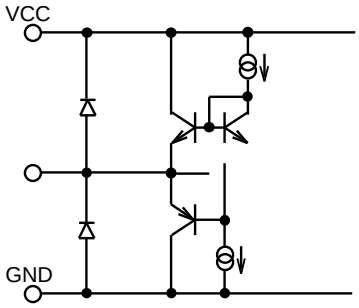	A terminal for Fader and Subwoofer output.

The values in the pin explanation and input/output equivalent circuit are for reference purposes only. It is not a guaranteed value.

© 2015 ROHM Co., Ltd. All rights reserved.

I/O Equivalent Circuits – continued

Pin No.	Pin Name	Pin Voltage	Equivalent Circuit	Pin Description
21	VCC	8.5		Power supply terminal.
22	SCL	-	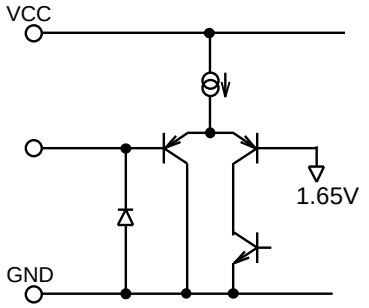	A terminal for clock input of I^2C BUS communication.
23	SDA	-	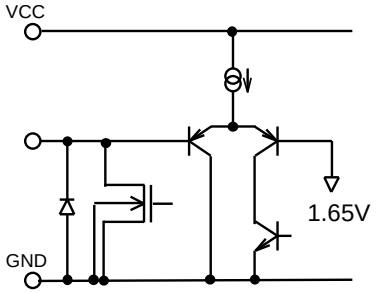	A terminal for data input of I^2C BUS communication.
24	GND	0		Ground terminal.
1	FIL	4.25	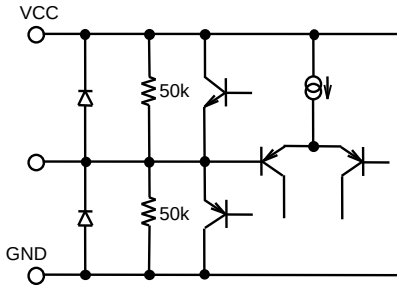	Voltage for reference bias of analog signal system. The simple precharge circuit and simple discharge circuit for an external capacitor are built in.

The values in the pin explanation and input/output equivalent circuit are for reference purposes only. It is not a guaranteed value.

© 2015 ROHM Co., Ltd. All rights reserved.

Operational Notes

1. **Reverse Connection of Power Supply**
   Connecting the power supply in reverse polarity can damage the IC. Take precautions against reverse polarity when connecting the power supply, such as mounting an external diode between the power supply and the IC's power supply pins.

2. **Power Supply Lines**
   Design the PCB layout pattern to provide low impedance supply lines. Separate the ground and supply lines of the digital and analog blocks to prevent noise in the ground and supply lines of the digital block from affecting the analog block. Furthermore, connect a capacitor to ground at all power supply pins. Consider the effect of temperature and aging on the capacitance value when using electrolytic capacitors.

3. **Ground Voltage**
   Ensure that no pins are at a voltage below that of the ground pin at any time, even during transient condition.

4. **Ground Wiring Pattern**
   When using both small-signal and large-current ground traces, the two ground traces should be routed separately but connected to a single ground at the reference point of the application board to avoid fluctuations in the small-signal ground caused by large currents. Also ensure that the ground traces of external components do not cause variations on the ground voltage. The ground lines must be as short and thick as possible to reduce line impedance.

5. **Thermal Consideration**
   Should by any chance the power dissipation rating be exceeded the rise in temperature of the chip may result in deterioration of the properties of the chip. In case of exceeding this absolute maximum rating, increase the board size and copper area to prevent exceeding the Pd rating.

6. **Recommended Operating Conditions**
   These conditions represent a range within which the expected characteristics of the IC can be approximately obtained. The electrical characteristics are guaranteed under the conditions of each parameter.

7. **Inrush Current**
   When power is first supplied to the IC, it is possible that the internal logic may be unstable and inrush current may flow instantaneously due to the internal powering sequence and delays, especially if the IC has more than one power supply. Therefore, give special consideration to power coupling capacitance, power wiring, width of ground wiring, and routing of connections.

8. **Operation Under Strong Electromagnetic Field**
   Operating the IC in the presence of a strong electromagnetic field may cause the IC to malfunction.

9. **Testing on Application Boards**
   When testing the IC on an application board, connecting a capacitor directly to a low-impedance output pin may subject the IC to stress. Always discharge capacitors completely after each process or step. The IC's power supply should always be turned off completely before connecting or removing it from the test setup during the inspection process. To prevent damage from static discharge, ground the IC during assembly and use similar precautions during transport and storage.

10. **Inter-pin Short and Mounting Errors**
    Ensure that the direction and position are correct when mounting the IC on the PCB. Incorrect mounting may result in damaging the IC. Avoid nearby pins being shorted to each other especially to ground, power supply and output pin. Inter-pin shorts could be due to many reasons such as metal particles, water droplets (in very humid environment) and unintentional solder bridge deposited in between pins during assembly to name a few.

11. **Unused Input Pins**
    Input pins of an IC are often connected to the gate of a MOS transistor. The gate has extremely high impedance and extremely low capacitance. If left unconnected, the electric field from the outside can easily charge it. The small charge acquired in this way is enough to produce a significant effect on the conduction through the transistor and cause unexpected operation of the IC. So unless otherwise specified, unused input pins should be connected to the power supply or ground line.

© 2015 ROHM Co., Ltd. All rights reserved.

Operational Notes – continued

12. Regarding the Input Pin of the IC

This monolithic IC contains P+ isolation and P substrate layers between adjacent elements in order to keep them isolated. P-N junctions are formed at the intersection of the P layers with the N layers of other elements, creating a parasitic diode or transistor. For example (refer to figure below):

When GND > Pin A and GND > Pin B, the P-N junction operates as a parasitic diode.
When GND > Pin B, the P-N junction operates as a parasitic transistor.

Parasitic diodes inevitably occur in the structure of the IC. The operation of parasitic diodes can result in mutual interference among circuits, operational faults, or physical damage. Therefore, conditions that cause these diodes to operate, such as applying a voltage lower than the GND voltage to an input pin (and thus to the P substrate) should be avoided.

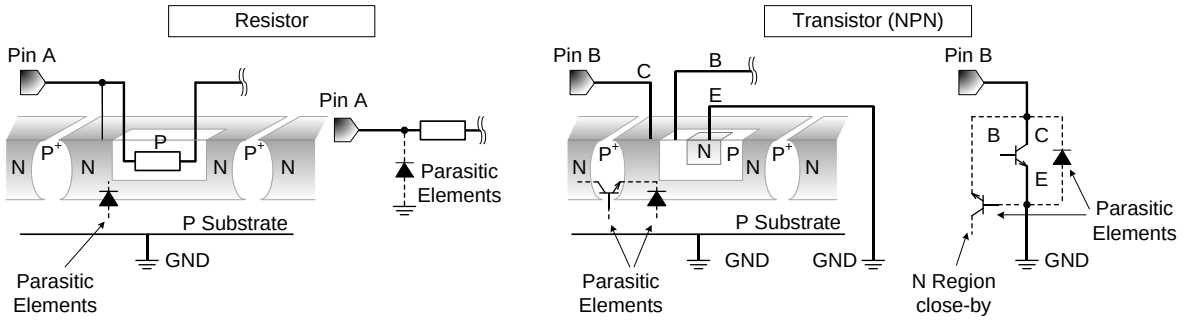

Figure 25. Example of monolithic IC structure

13. About a Signal Input Part

(a) About Input Coupling Capacitor Constant Value

In the input signal terminal, please decide the constant value of the input coupling capacitor C(F) that would be sufficient to form an RC characterized HPF with input impedance R_{IN}(Ω) inside the IC.

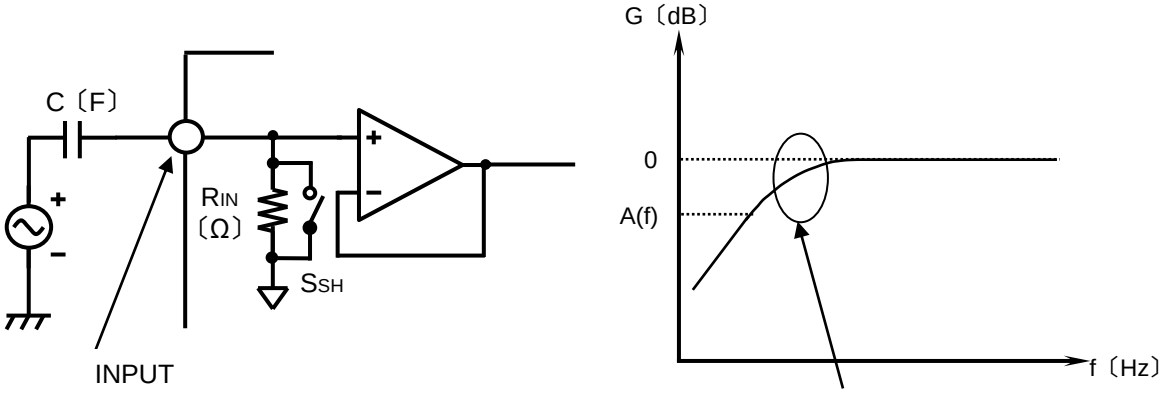

$$A(f) = \sqrt{\frac{(2\pi fCR_{IN})^2}{1+(2\pi fCR_{IN})^2}}$$

(b) About the Input Selector SHORT

SHORT mode is the command which makes switch S_{SH} =ON of input selector part so that the input impedance R_{IN} of all terminals becomes small. Switch S_{SH} is OFF when SHORT command is not selected.
The constant time brought about by the small resistance inside and the capacitor outside the LSI becomes small when this command is used. The charge time of the capacitor becomes short. Since SHORT mode turns ON the switch of S_{SH} and makes it low impedance, please use it at no signal condition.

14. About Mute Terminal(Pin 13) when power supply is OFF

There should be no applied voltage across the Mute terminal (Pin 13) when power-supply is OFF.
A resistor (about 2.2kΩ) should be connected in series to Mute terminal in case a voltage is supplied to Mute terminal. (Please refer Application Circuit Diagram.)

© 2015 ROHM Co., Ltd. All rights reserved.

Ordering Information

B D 3 7 5 2 4 F S	-	E 2
Part Number	Package FS: SSOP-A24	Packaging and forming specification E2: Embossed tape and reel

Marking Diagram

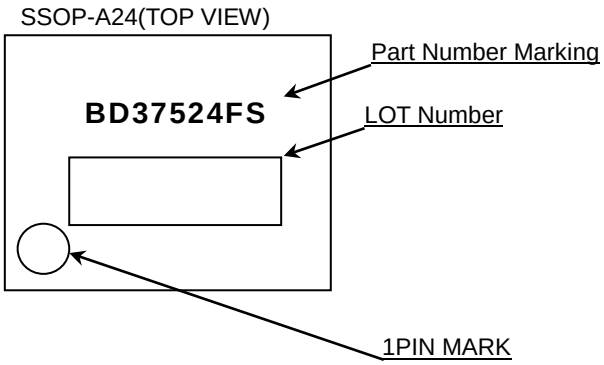

© 2015 ROHM Co., Ltd. All rights reserved.

Physical Dimension, Tape and Reel Information

Package Name	SSOP-A24

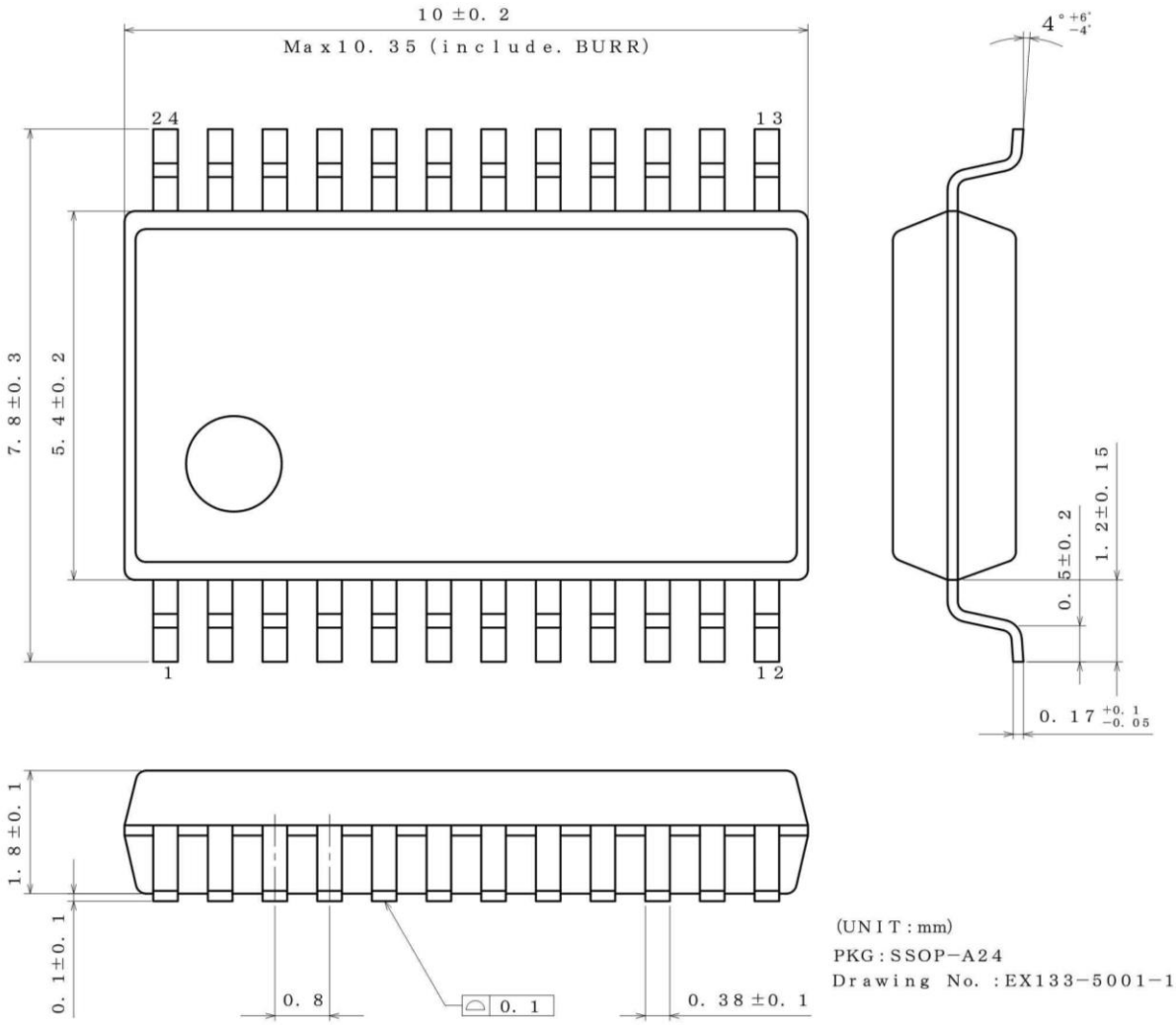

<Tape and Reel information>

Tape	Embossed carrier tape
Quantity	2000pcs
Direction of feed	E2 (The direction is the 1pin of product is at the upper left when you hold reel on the left hand and you pull out the tape on the right hand)

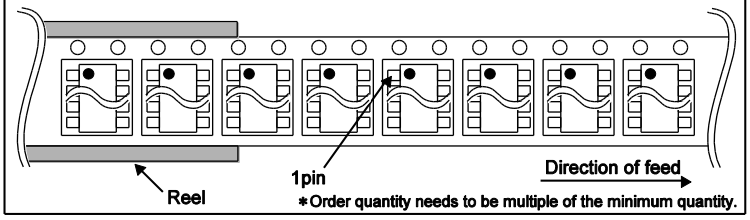

∗Order quantity needs to be multiple of the minimum quantity.

© 2015 ROHM Co., Ltd. All rights reserved.

Revision History

Date	Revision	Changes
16.Dec.2015	001	New Release

© 2015 ROHM Co., Ltd. All rights reserved.

Notice

Precaution on using ROHM Products

1. Our Products are designed and manufactured for application in ordinary electronic equipments (such as AV equipment, OA equipment, telecommunication equipment, home electronic appliances, amusement equipment, etc.). If you intend to use our Products in devices requiring extremely high reliability (such as medical equipment (Note 1), transport equipment, traffic equipment, aircraft/spacecraft, nuclear power controllers, fuel controllers, car equipment including car accessories, safety devices, etc.) and whose malfunction or failure may cause loss of human life, bodily injury or serious damage to property ("Specific Applications"), please consult with the ROHM sales representative in advance. Unless otherwise agreed in writing by ROHM in advance, ROHM shall not be in any way responsible or liable for any damages, expenses or losses incurred by you or third parties arising from the use of any ROHM's Products for Specific Applications.

(Note1) Medical Equipment Classification of the Specific Applications

JAPAN	USA	EU	CHINA
CLASSⅢ	CLASSⅢ	CLASSⅡb	CLASSⅢ
CLASSⅣ		CLASSⅢ	

2. ROHM designs and manufactures its Products subject to strict quality control system. However, semiconductor products can fail or malfunction at a certain rate. Please be sure to implement, at your own responsibilities, adequate safety measures including but not limited to fail-safe design against the physical injury, damage to any property, which a failure or malfunction of our Products may cause. The following are examples of safety measures:
   [a] Installation of protection circuits or other protective devices to improve system safety
   [b] Installation of redundant circuits to reduce the impact of single or multiple circuit failure

3. Our Products are designed and manufactured for use under standard conditions and not under any special or extraordinary environments or conditions, as exemplified below. Accordingly, ROHM shall not be in any way responsible or liable for any damages, expenses or losses arising from the use of any ROHM's Products under any special or extraordinary environments or conditions. If you intend to use our Products under any special or extraordinary environments or conditions (as exemplified below), your independent verification and confirmation of product performance, reliability, etc, prior to use, must be necessary:
   [a] Use of our Products in any types of liquid, including water, oils, chemicals, and organic solvents
   [b] Use of our Products outdoors or in places where the Products are exposed to direct sunlight or dust
   [c] Use of our Products in places where the Products are exposed to sea wind or corrosive gases, including Cl_2, H_2S, NH_3, SO_2, and NO_2
   [d] Use of our Products in places where the Products are exposed to static electricity or electromagnetic waves
   [e] Use of our Products in proximity to heat-producing components, plastic cords, or other flammable items
   [f] Sealing or coating our Products with resin or other coating materials
   [g] Use of our Products without cleaning residue of flux (even if you use no-clean type fluxes, cleaning residue of flux is recommended); or Washing our Products by using water or water-soluble cleaning agents for cleaning residue after soldering
   [h] Use of the Products in places subject to dew condensation

4. The Products are not subject to radiation-proof design.

5. Please verify and confirm characteristics of the final or mounted products in using the Products.

6. In particular, if a transient load (a large amount of load applied in a short period of time, such as pulse. is applied, confirmation of performance characteristics after on-board mounting is strongly recommended. Avoid applying power exceeding normal rated power; exceeding the power rating under steady-state loading condition may negatively affect product performance and reliability.

7. De-rate Power Dissipation depending on ambient temperature. When used in sealed area, confirm that it is the use in the range that does not exceed the maximum junction temperature.

8. Confirm that operation temperature is within the specified range described in the product specification.

9. ROHM shall not be in any way responsible or liable for failure induced under deviant condition from what is defined in this document.

Precaution for Mounting / Circuit board design

1. When a highly active halogenous (chlorine, bromine, etc.) flux is used, the residue of flux may negatively affect product performance and reliability.

2. In principle, the reflow soldering method must be used on a surface-mount products, the flow soldering method must be used on a through hole mount products. If the flow soldering method is preferred on a surface-mount products, please consult with the ROHM representative in advance.

For details, please refer to ROHM Mounting specification

© 2015 ROHM Co., Ltd. All rights reserved.

Precautions Regarding Application Examples and External Circuits

1. If change is made to the constant of an external circuit, please allow a sufficient margin considering variations of the characteristics of the Products and external components, including transient characteristics, as well as static characteristics.

2. You agree that application notes, reference designs, and associated data and information contained in this document are presented only as guidance for Products use. Therefore, in case you use such information, you are solely responsible for it and you must exercise your own independent verification and judgment in the use of such information contained in this document. ROHM shall not be in any way responsible or liable for any damages, expenses or losses incurred by you or third parties arising from the use of such information.

Precaution for Electrostatic

This Product is electrostatic sensitive product, which may be damaged due to electrostatic discharge. Please take proper caution in your manufacturing process and storage so that voltage exceeding the Products maximum rating will not be applied to Products. Please take special care under dry condition (e.g. Grounding of human body / equipment / solder iron, isolation from charged objects, setting of Ionizer, friction prevention and temperature / humidity control).

Precaution for Storage / Transportation

1. Product performance and soldered connections may deteriorate if the Products are stored in the places where:
   [a] the Products are exposed to sea winds or corrosive gases, including Cl2, H2S, NH3, SO2, and NO2
   [b] the temperature or humidity exceeds those recommended by ROHM
   [c] the Products are exposed to direct sunshine or condensation
   [d] the Products are exposed to high Electrostatic

2. Even under ROHM recommended storage condition, solderability of products out of recommended storage time period may be degraded. It is strongly recommended to confirm solderability before using Products of which storage time is exceeding the recommended storage time period.

3. Store / transport cartons in the correct direction, which is indicated on a carton with a symbol. Otherwise bent leads may occur due to excessive stress applied when dropping of a carton.

4. Use Products within the specified time after opening a humidity barrier bag. Baking is required before using Products of which storage time is exceeding the recommended storage time period.

Precaution for Product Label

QR code printed on ROHM Products label is for ROHM's internal use only.

Precaution for Disposition

When disposing Products please dispose them properly using an authorized industry waste company.

Precaution for Foreign Exchange and Foreign Trade act

Since concerned goods might be fallen under listed items of export control prescribed by Foreign exchange and Foreign trade act, please consult with ROHM in case of export.

Precaution Regarding Intellectual Property Rights

1. All information and data including but not limited to application example contained in this document is for reference only. ROHM does not warrant that foregoing information or data will not infringe any intellectual property rights or any other rights of any third party regarding such information or data.

2. ROHM shall not have any obligations where the claims, actions or demands arising from the combination of the Products with other articles such as components, circuits, systems or external equipment (including software).

3. No license, expressly or implied, is granted hereby under any intellectual property rights or other rights of ROHM or any third parties with respect to the Products or the information contained in this document. Provided, however, that ROHM will not assert its intellectual property rights or other rights against you or your customers to the extent necessary to manufacture or sell products containing the Products, subject to the terms and conditions herein.

Other Precaution

1. This document may not be reprinted or reproduced, in whole or in part, without prior written consent of ROHM.

2. The Products may not be disassembled, converted, modified, reproduced or otherwise changed without prior written consent of ROHM.

3. In no event shall you use in any way whatsoever the Products and the related technical information contained in the Products or this document for any military purposes, including but not limited to, the development of mass-destruction weapons.

4. The proper names of companies or products described in this document are trademarks or registered trademarks of ROHM, its affiliated companies or third parties.

© 2015 ROHM Co., Ltd. All rights reserved.

General Precaution

1. Before you use our Products, you are requested to carefully read this document and fully understand its contents. ROHM shall not be in any way responsible or liable for failure, malfunction or accident arising from the use of any ROHM's Products against warning, caution or note contained in this document.

2. All information contained in this document is current as of the issuing date and subject to change without any prior notice. Before purchasing or using ROHM's Products, please confirm the latest information with a ROHM sales representative.

3. The information contained in this document is provided on an "as is" basis and ROHM does not warrant that all information contained in this document is accurate and/or error-free. ROHM shall not be in any way responsible or liable for any damages, expenses or losses incurred by you or third parties resulting from inaccuracy or errors of or concerning such information.

© 2015 ROHM Co., Ltd. All rights reserved.