MARKETING SALES DRAWING

DIMENSIONS IN INCHES - DO NOT SCALE THIS DRAWING
DIMENSIONS IN METRIC - [ ]

Electrical Testing per Tusonix standard test plans and Mil-Std-202 Test Methods.

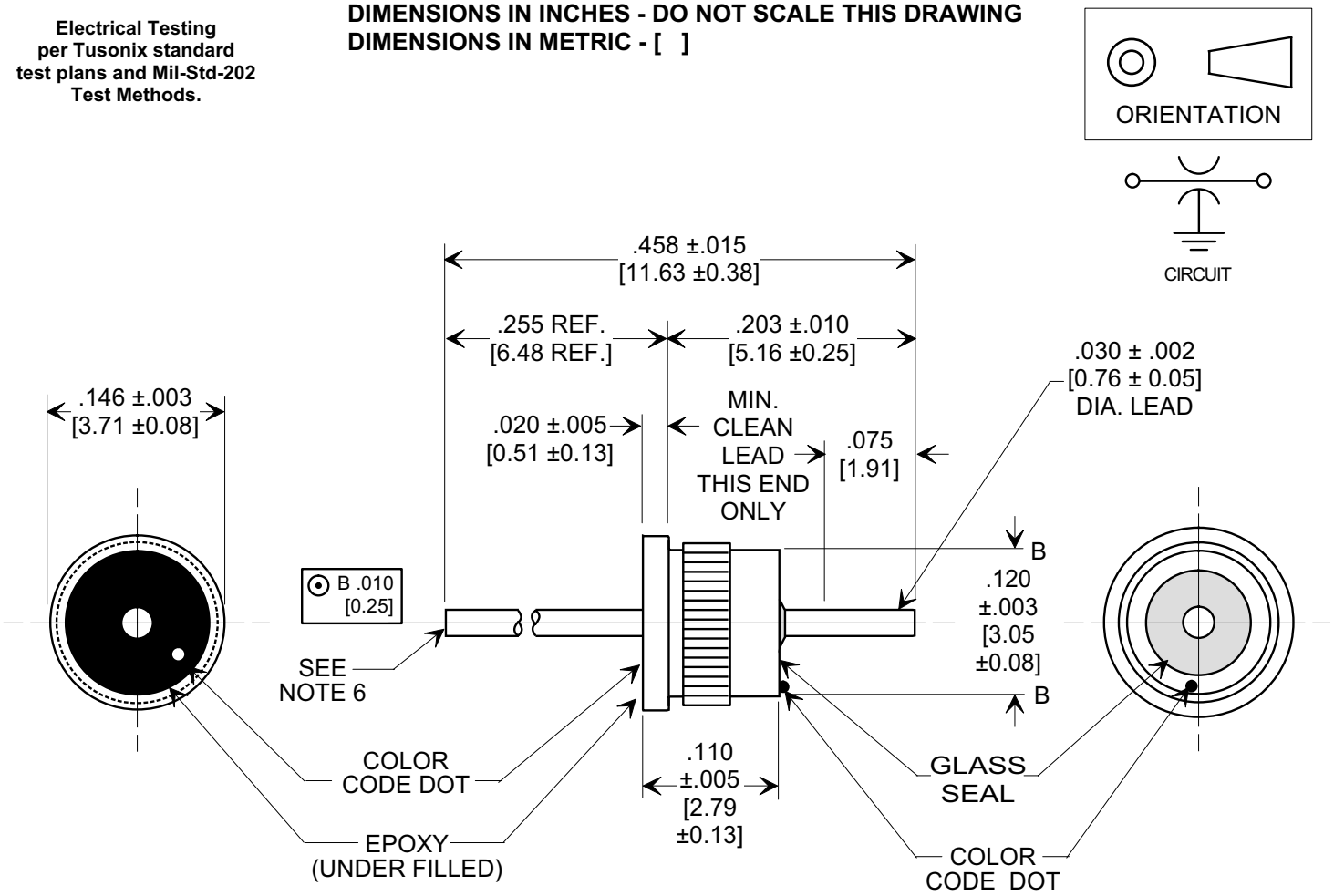

NOTES:
1. OPERATING TEMPERATURE RANGE -55° C to +125° C.
2. GOLD PLATED CASE AND LEAD.
3. EPOXY SEALED ON OPPOSITE END FROM GLASS SEAL.
4. PROPER INSTALLATION REQUIRES FIRM, STEADY PRESSURE UNTIL FLANGE IS FULLY SEATED
5. RECOMMENDED MOUNTING HOLE: .128/.129 [3.25/3.28] DIA.
6. END OF LEAD INDICATED TO BE FREE OF BURRS.
7. TUSONIX STANDARD PART NUMBER: 4306-680.
   TUSONIX RoHS COMPLIANT PART NUMBER: 4306-680 LF.
   CUSTOMER MUST SPECIFY STANDARD OR RoHS PART NUMBER WHEN ORDERING.
8. RoHS COMPLIANT PART MARKED WITH GREEN DOT FOR IDENTIFICATION.

Cx (pF)	DC WORKING VOLTAGE		DC CURRENT (AMPS)	I.R. MIN.	D.W.V.	COLOR CODE
	85°C	125°C				
5 MAX.	300	200	5	10 G	500 VDC	BLACK / BLACK

REVISION RECORD	
0	Original Release C.O. 20050620-2-02

--TOLERANCES--
Unless Otherwise Specified
DECIMAL ±
ANGLES ±

TUSONIX
TUCSON, ARIZONA

Title
PRESS-IN LINE FEED-THRU

Drawn S.M. 06-22-05
Scale 7 X
Approved T.C. 06-22-05

A
4306-680