Alle Rechte vorbehalten/ *All rights reserved*

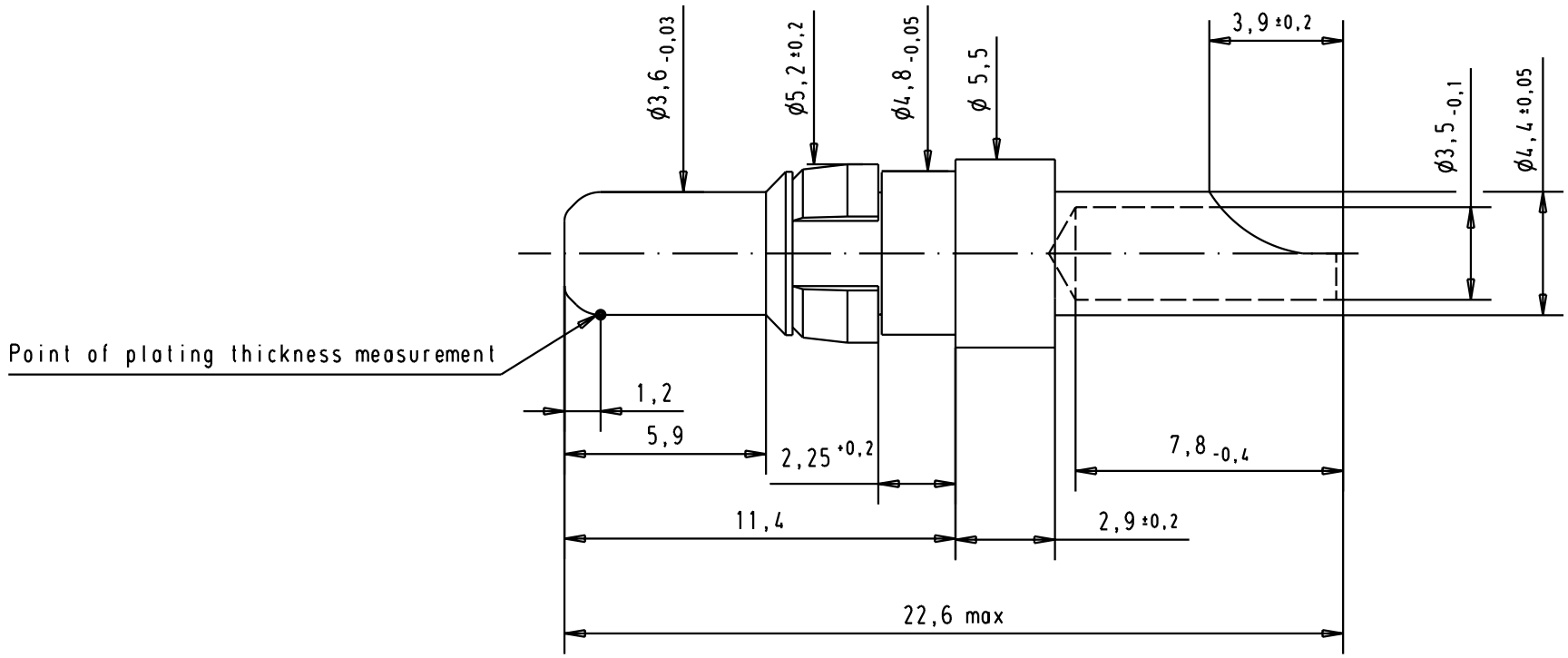

							Dat.	Name		Male Hight power contact, 30A straight cable terminaison, solder	Maßstab/ *Scale*
						Detail.	21-JUN-02	CV	All Dim. in mm Orig. Size DIN A 4		5:1
09692817422	Mating area	0,2 µm Au				Insp.					
	Termination area	5 µm Sn				Stand.					
09692815422	Mating area	0,8 µm Au				HARTING EURL F-95972 Paris				TB 09 69 281 x422	Blatt/ *Page* 1/1
	Termination area	0,2 µm Au	31057	21-JUN-02	CV						
Part number	Plating		Mod.	Dat.	Name					Sub.	