Alle Rechte vorbehalten/ *All rights reserved*

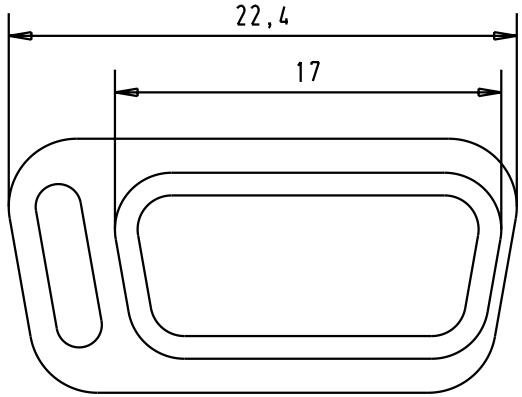

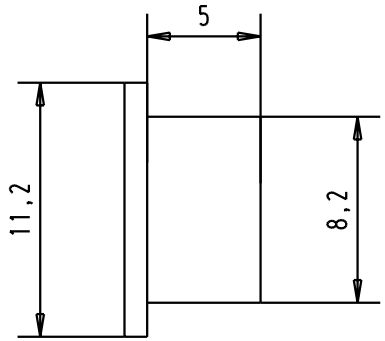

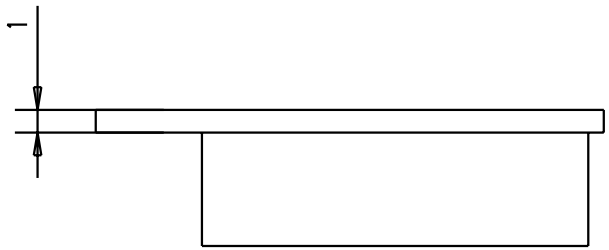

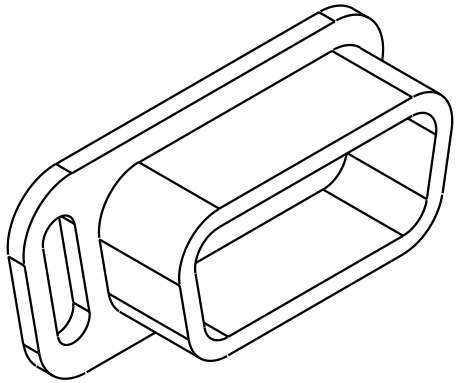

							Dat.	Name	All Dim. in mm Orig. Size DIN A 4	D-Sub, Dust cap, thermoplastic black, for male connector 9 poles	Maßstab/ *Scale* 3:1
						Detail.	09-APR-02	CV			
						Insp.					
						Stand.					
09 67 009 0611						HARTING EURL F-95972 Paris				TB 09670090611	Blatt/ *Page* 1
			29768	09-APR-02	CV						
Part number			Mod.	Dat.	Name					Sub.	