THIS DRAWING IS UNPUBLISHED. RELEASED FOR PUBLICATION -,- .
© COPYRIGHT – TE Connectivity Ltd. ALL RIGHTS RESERVED.

REVISIONS					
P	LTR	DESCRIPTION	DATE	DWN	APVD
	E4	REVISED PER ECR-22-159732	06DEC2022	DB	BW

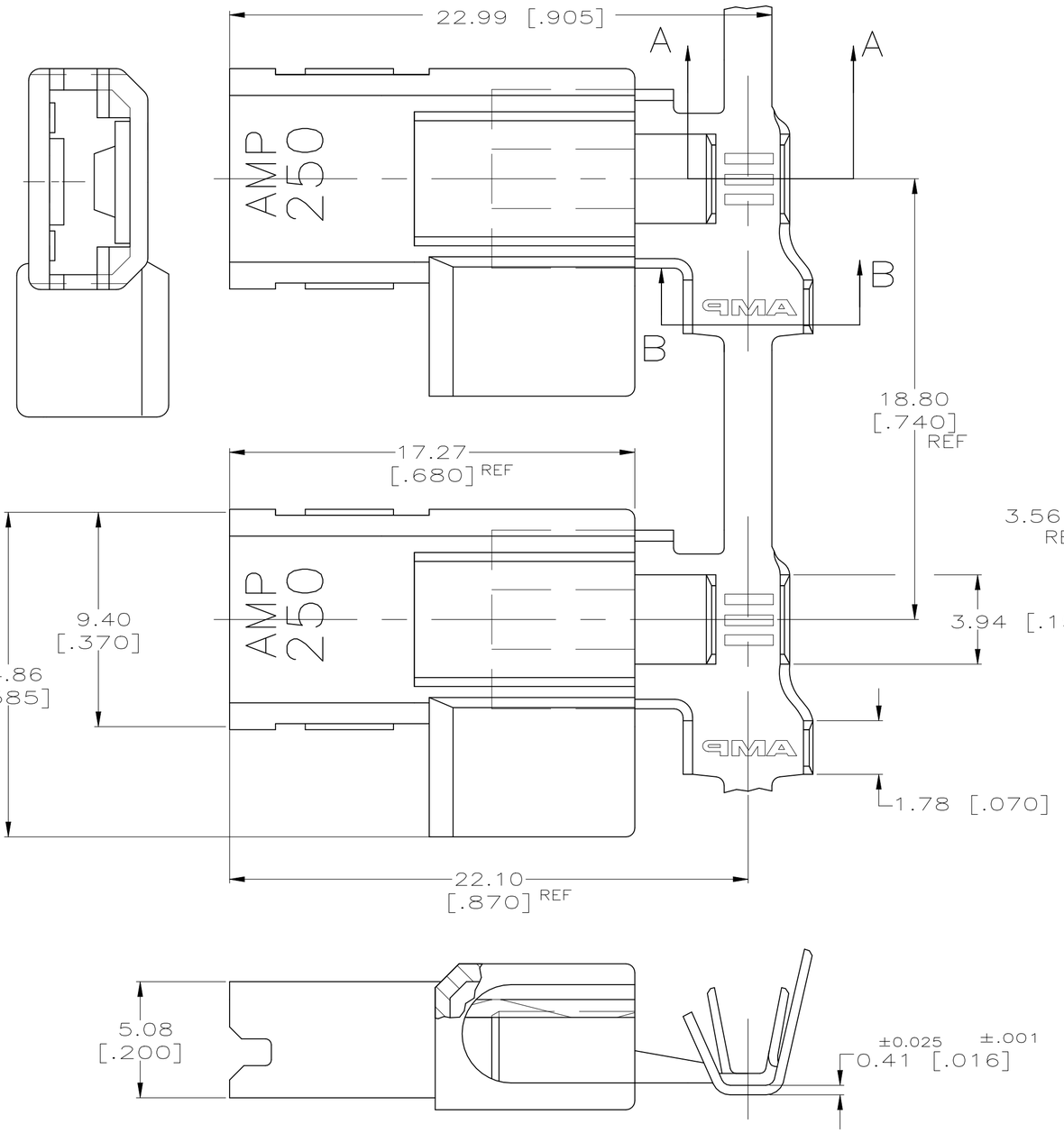

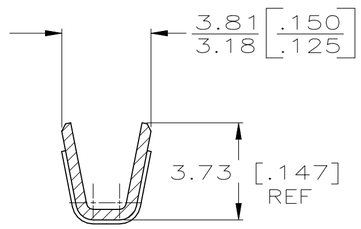

SECTION A–A

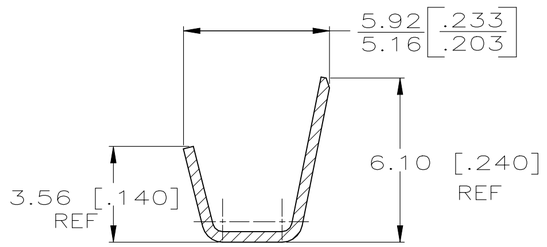

SECTION B–B

1 BUDGET FLAG FASTON TERMINALS, BASE P/N 63559, ARE USED IN THIS PRODUCT.

2 WIRE SIZE [#18–#14] AWG.

3 INSULATION RANGE IS 2.79–4.06[.110–.160] DIA.

4 PRELIMINARY – NOT FOR PRODUCTION

5 OFFERED FOR CONSIDERATION IN APPLICATIONS REQUIRING "NON–DRIP" HOUSING MATERIAL.

6 NOTE DELETED

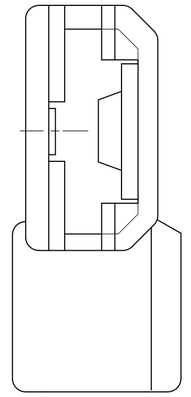

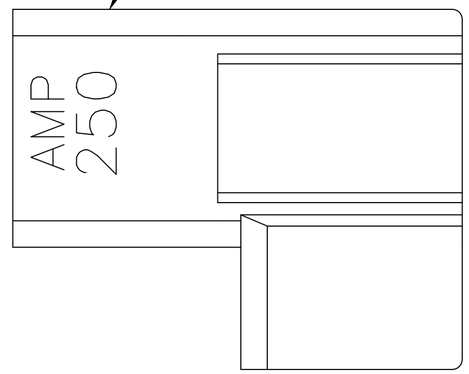

PACKAGING	HOUSING MATERIAL	TERMINAL FINISH – MATERIAL	PART NO
–	NYLON, UL94 V–0 GWIT 960°C	TIN PLATED – 4M BRASS	521716–4
SUPERSEDED BY 521716–4 4	–	~~PLAIN 4M BRASS~~	~~521716–3~~
SUPERSEDED BY 521716–4	~~STANDARD~~	NYLON UL94 V–0	~~TIN PLATED – 4M BRASS~~	~~521716–2~~
SUPERSEDED BY 521716–4	~~STANDARD~~		~~PLAIN – 4M BRASS~~	~~521716–1~~ 4

THIS DRAWING IS A CONTROLLED DOCUMENT.

DIMENSIONS: mm [INCHES]

TOLERANCES UNLESS OTHERWISE SPECIFIED:
0 PLC ± –
1 PLC ± –
2 PLC ± –
3 PLC ± 0.25 [.010]
4 PLC ± –
ANGLES ± –

MATERIAL: SEE TABLE
FINISH: SEE TABLE

DWN R FLAIG 23MAR2004
CHK K YI 23MAR2004
APVD K YI 23MAR2004
PRODUCT SPEC 108–1285
APPLICATION SPEC 114–2124
WEIGHT –

CUSTOMER DRAWING

TE Connectivity Ltd.

NAME
ASSEMBLY, RECEPTACLE, FLAG, ULTRA–POD, 6.35 [.250] SERIES
–

SIZE	CAGE CODE	DRAWING NO	RESTRICTED TO
A2	00779	C–521716	–

SCALE 6:1 SHEET 1 OF 1 REV E4

521716