© – TE Connectivity. All Rights Reserved.

REVISIONS					
P	LTR	DESCRIPTION	DATE	DWN	APVD
	M4	REVISED PER ECR-22-160893	14DEC2022	DB	BW

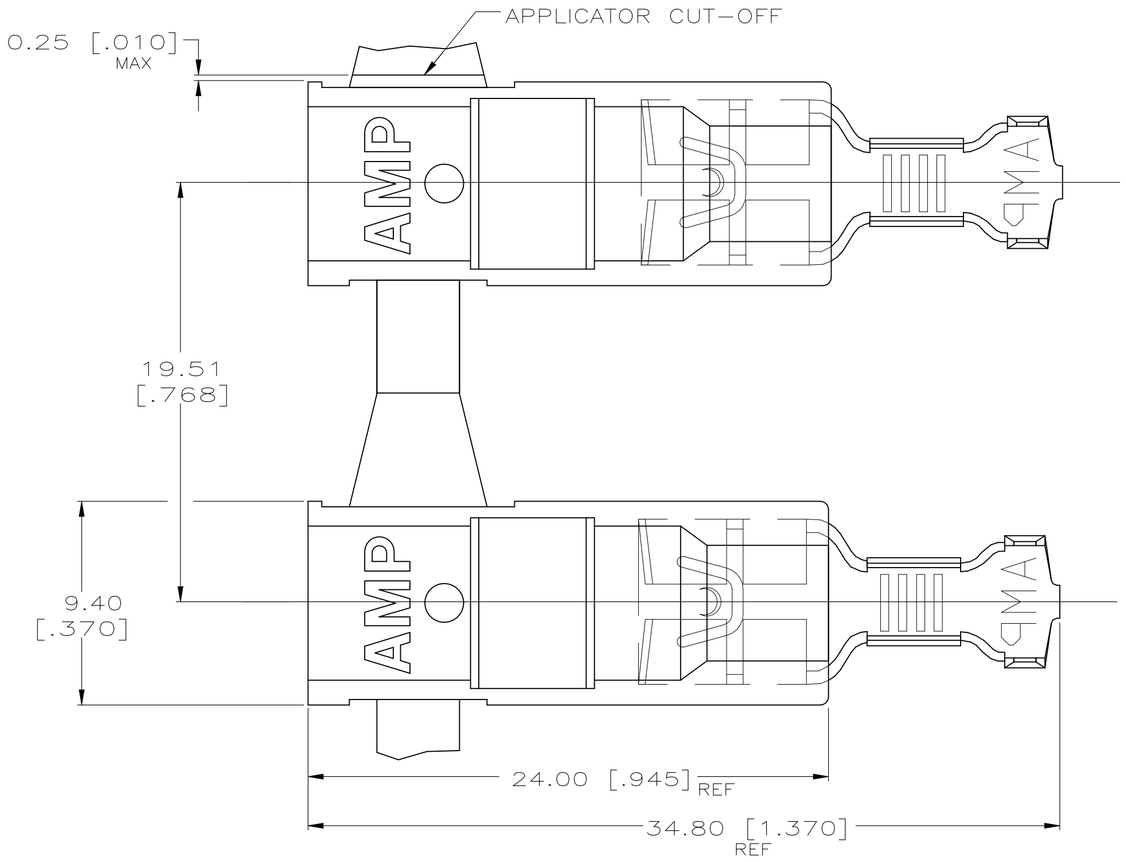

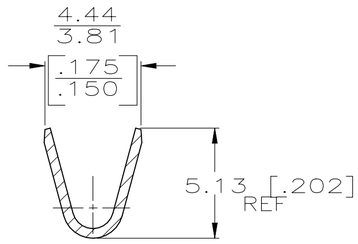

SECTION A–A

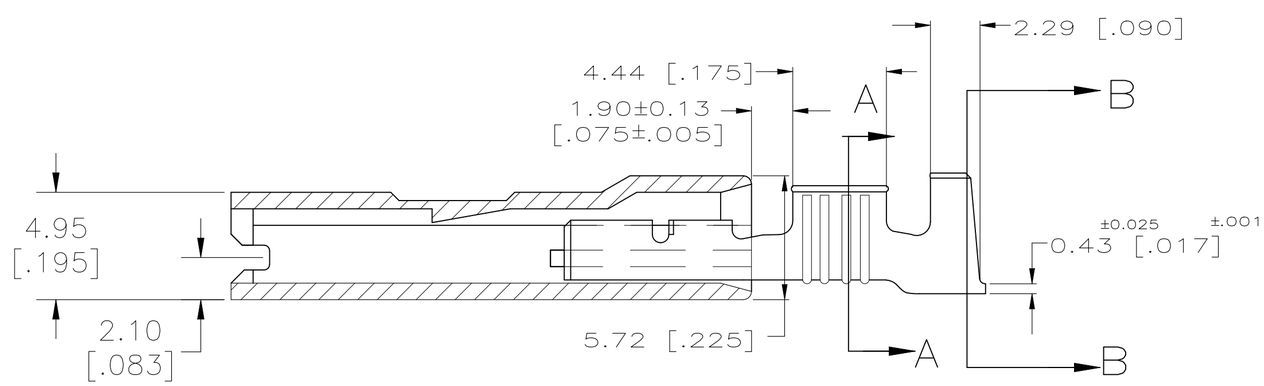

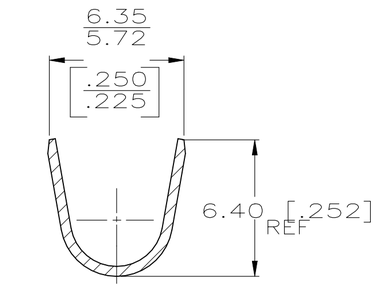

SECTION B–B

OBSOLETE	~~BULK~~	~~PLAIN~~	3.30–4.57 [.130–.180]	2.0–5.0 mm [14–10]	0.813 [.032]	~~5–520974–2~~
	STANDARD	2 TIN PLATED				520974–2
	PACKAGING	PLAIN				520974–1
		TERMINAL FINISH	INSULATION RANGE	WIRE SIZE	MATING TAB THK ±0.025 [±.001]	PART NO.

1 LOW–INSERTION FASTON TERMINALS, BASE P/N 63639, ARE USED IN THIS PRODUCT.

2 TIN PER MIL–T–10727.

3 MATERIAL: HOUSING – 6/6 NTLON
TERMINAL – BRASS

4 FINISH: HOUSING – COLOR, NATURAL
TERMINAL – SEE TABLE

THIS DRAWING IS A CONTROLLED DOCUMENT.

DIMENSIONS: mm [INCHES]

TOLERANCES UNLESS OTHERWISE SPECIFIED:
0 PLC ± –
1 PLC ± –
2 PLC ± –
3 PLC ± 0.25 [.010]
4 PLC ± –
ANGLES ± –

MATERIAL 3

FINISH 4

DWN JR RUTH 6/11/90
CHK MS FEHER 6/11/90
APVD – —
PRODUCT SPEC 108–1285
APPLICATION SPEC 114–2124
WEIGHT 0.000000

TE Connectivity

NAME
ASSEMBLY, RECEPTACLE,
ULTRA–POD, 6.35 [.250] SERIES
–

SIZE	CAGE CODE	DRAWING NO	RESTRICTED TO
A2	00779	C-520974	—

CUSTOMER DRAWING | SCALE 5:1 | SHEET 1 OF 1 | REV M4

520974

1471–9 (1/15)