THIS DRAWING IS UNPUBLISHED. RELEASED FOR PUBLICATION -,- .
© COPYRIGHT 1963 By - ALL RIGHTS RESERVED.

LOC	DIST
AF	50

REVISIONS

P	LTR	DESCRIPTION	DATE	DWN	APVD
	R	REVISED PER ECR-12-013445	09NOV12	KH	PD

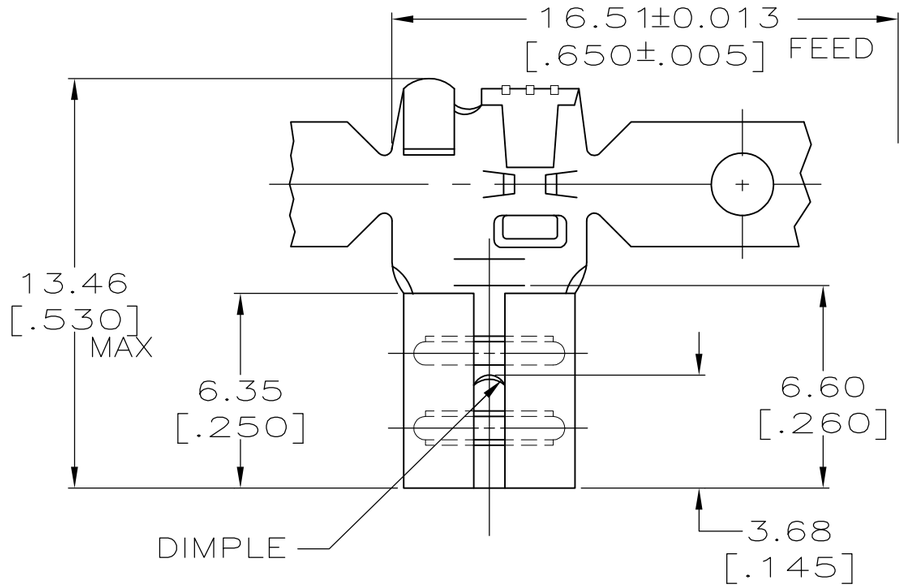

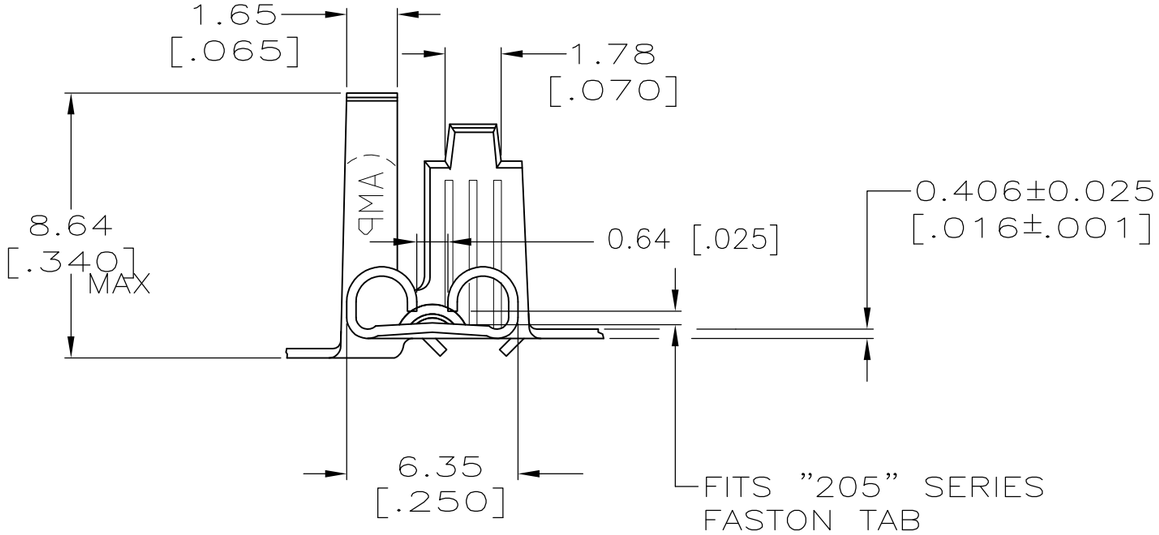

1 CONTINUOUS STRIP ON REELS.

2 WIRE SIZE IS [#20-#14] AWG.

3 INSULATION RANGE TO BE 2.79-4.32 [.110-.170] DIA.

4 MATING TAB THK TO BE 0.813±0.025 [.032±.001].

FINISH	MATERIAL	PART NO
-	H04 BRASS	42234-1
TIN	BRASS	42234-2
-	-	-
-	-	-
-	T3 PHOS BRONZE	42234-5

THIS DRAWING IS A CONTROLLED DOCUMENT.

DIMENSIONS: mm [INCHES]

TOLERANCES UNLESS OTHERWISE SPECIFIED:
0 PLC ± -
1 PLC ± -
2 PLC ± 0.25[.010]
3 PLC ± -
4 PLC ± -
ANGLES ± -

MATERIAL: SEE TABLE

FINISH: SEE TABLE

DWN M.S. FEHER 25NOV2003
CHK P DESANTIS 25NOV2003
APVD P DESANTIS 25NOV2003
PRODUCT SPEC -
APPLICATION SPEC 114-2078
WEIGHT -

TE Connectivity

NAME
RECEPTACLE, FASTON,
FLAG, 5.21 [.205] SERIES
-

SIZE	CAGE CODE	DRAWING NO	RESTRICTED TO
A3	00779	C-42234	-

CUSTOMER DRAWING | SCALE 5:1 | SHEET 1 OF 1 | REV R