THIS DRAWING IS UNPUBLISHED. RELEASED FOR PUBLICATION –,– .
© COPYRIGHT – By – ALL RIGHTS RESERVED.

LOC	DIST
AF	50

REVISIONS

P	LTR	DESCRIPTION	DATE	DWN	APVD
	D	REVISED PER ECR–12–013459	04JAN2013	KH	PD

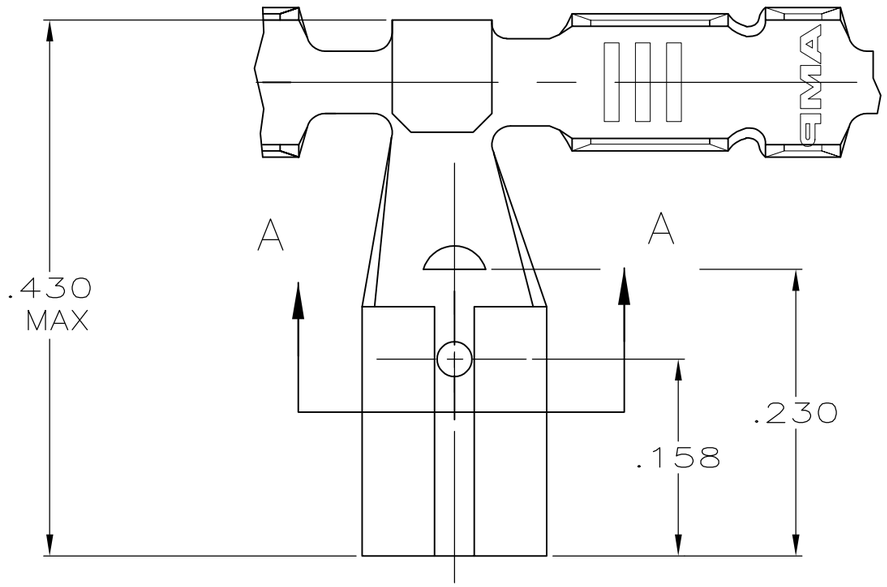

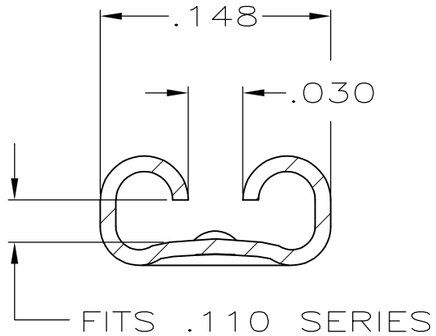

SECTION A–A
SCALE 10:1

1 CONTINUOUS STRIP ON REELS

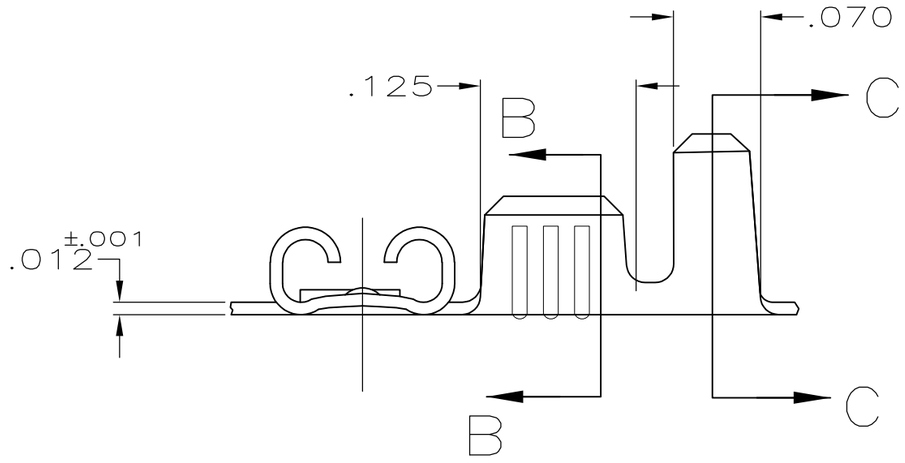

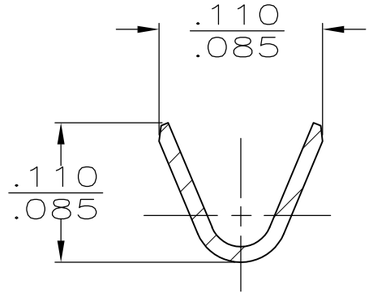

SECTION B–B
SCALE 10:1

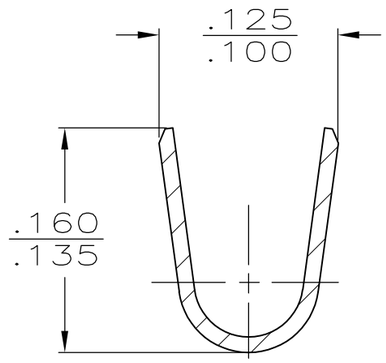

SECTION C–C
SCALE 10:1

–	.060–.100 DIA	22–18 AWG	.020	61070–2
TIN				61070–1
FINISH	INSULATION RANGE	WIRE SIZE	MATING TAB THK ±.001	PART NO

THIS DRAWING IS A CONTROLLED DOCUMENT.

DIMENSIONS: INCHES

TOLERANCES UNLESS OTHERWISE SPECIFIED:
0 PLC ± –
1 PLC ± –
2 PLC ± –
3 PLC ± .015
4 PLC ± –
ANGLES ± 1°

MATERIAL: BRASS

FINISH: SEE TABLE

DWN	JR RUTH	4/22/91
CHK	MS FEHER	4/22/91
APVD	C MEYERS	4/22/91
PRODUCT SPEC	–	
APPLICATION SPEC	–	
WEIGHT	–	

TE Connectivity

NAME: RECEPTACLE, FASTON, FLAG, .110 SERIES

SIZE	CAGE CODE	DRAWING NO	RESTRICTED TO
A3	00779	C-61070	–

CUSTOMER DRAWING

SCALE	SHEET	REV
8:1	1 OF 1	D