7-1377174-9 ✔ ACTIVE

PIDG

TE Internal #: 7-1377174-9

Quick Disconnects, Receptacle, 22 – 15 AWG Wire Size, .3 – 1.5 mm² Wire Size, 592 – 2960 CMA Wire Size, Mating Tab Width 2.8 mm [.11 in], PIDG

View on TE.com >

Terminals & Splices > Quick Disconnects

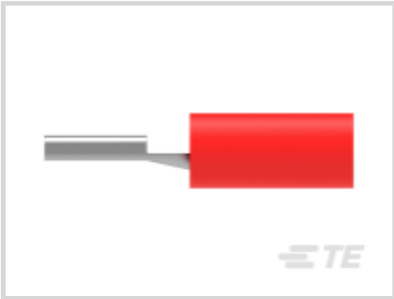

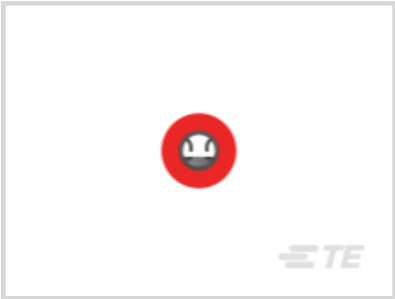

Quick Disconnect Terminal Type: **Receptacle**

Wire Size: **592 – 2960 CMA**

Mating Tab Width: **2.8 mm [.11 in]**

Features

Product Type Features

Insertion Force	Normal

Electrical Characteristics

Voltage Rating	300 V

Body Features

Insulation Material	Nylon

Contact Features

Quick Disconnect Terminal Type	Receptacle
Mating Tab Width	2.8 mm[.11 in]
Mating Tab Thickness	.3 mm[.012 in]
Terminal Orientation	Straight
Contact Base Material	Brass
Terminal Plating Material	Tin
Crimp Type	Compression
Barrel Type	Closed

Mechanical Attachment

Wire Insulation Support	With
Mating Retention Type	Dimple

Dimensions

Compatible Insulation Diameter Range	3.5 mm[.14 in]
Wire Size	592 – 2960 CMA

Usage Conditions

Insulation Option	Partially Insulated
Operating Temperature Range	105 °C[221 °F]

Packaging Features

Packaging Quantity	50
Packaging Method	Box

Other

Barrel Color	Red
Terminals & Splices Comment	Bulk number 165563-1.

Product Compliance

For compliance documentation, visit the product page on TE.com>

EU RoHS Directive 2011/65/EU	Compliant
EU ELV Directive 2000/53/EC	Compliant
China RoHS 2 Directive MIIT Order No 32, 2016	No Restricted Materials Above Threshold
EU REACH Regulation (EC) No. 1907/2006	Current ECHA Candidate List: JUNE 2023 (235) Candidate List Declared Against: JUNE 2023 (235) Does not contain REACH SVHC
Halogen Content	Low Halogen - Br, Cl, F, I < 900 ppm per homogenous material. Also BFR/CFR/PVC Free
Solder Process Capability	Not applicable for solder process capability

Product Compliance Disclaimer

This information is provided based on reasonable inquiry of our suppliers and represents our current actual knowledge based on the information they provided. This information is subject to change. The part numbers that TE has identified as EU RoHS compliant have a maximum concentration of 0.1% by weight in homogenous materials for lead, hexavalent chromium, mercury, PBB, PBDE, DBP, BBP, DEHP, DIBP, and 0.01% for cadmium, or qualify for an exemption to these limits as defined in the Annexes of Directive 2011/65/EU (RoHS2). Finished electrical and electronic equipment products will be CE marked as required by Directive 2011/65/EU. Components may not be CE marked. Additionally, the part numbers that TE has identified as EU ELV compliant have a maximum concentration of 0.1% by weight in homogenous materials for lead, hexavalent chromium, and mercury, and 0.01% for cadmium, or qualify for an exemption to these limits

as defined in the Annexes of Directive 2000/53/EC (ELV). Regarding the REACH Regulation, the information TE provides on SVHC in articles for this part number is based on the latest European Chemicals Agency (ECHA) 'Guidance on requirements for substances in articles' posted at this URL: https://echa.europa.eu/guidance-documents/guidance-on-reach

Compatible Parts

TE Part # 165563-1
110 PIDG FASTON REC

Also in the Series | PIDG

Compression Connectors(17)

Crimp Terminal Housings(1)

Crimp Wire Pins, Tabs & Ferrules(40)

Hand Crimping Tools(2)

Knife Disconnects(11)

PCB Terminals(9)

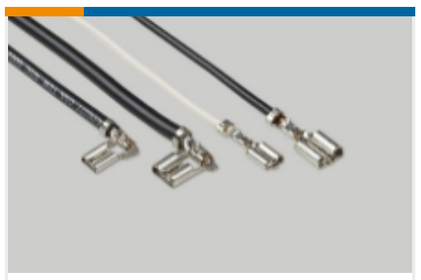

Quick Disconnects(49)

Ring Terminals & Spade Terminals(861)

Special Purpose Terminals(1)

Splices(47)

Customers Also Bought

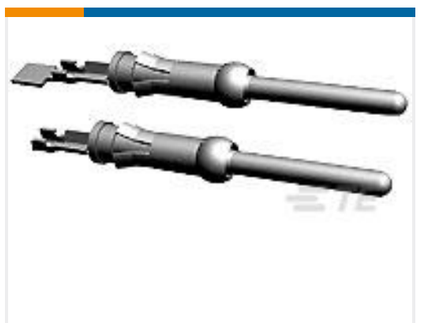

TE Part #66425-7
III+ PIN,30-26,15AU/FL,STRIP

TE Part #60415-1
110 FASTON REC 22-18 AWG TPBR

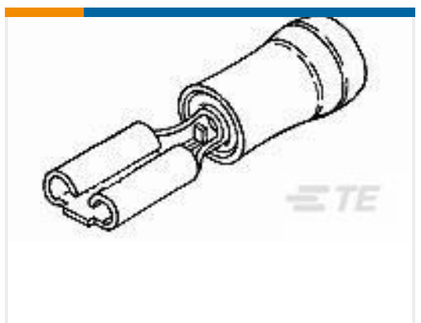

TE Part #2-165565-1
2,8 PIDG FASTON REC

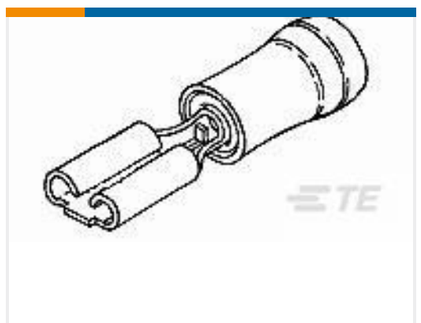

TE Part #8-1377174-1
SMP 0-0165565-1

TE Part #8-1377174-4
SMP 0-0165566-2

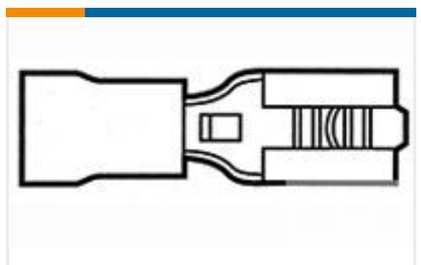

TE Part #9-1377174-9
SMP 9-0160477-2

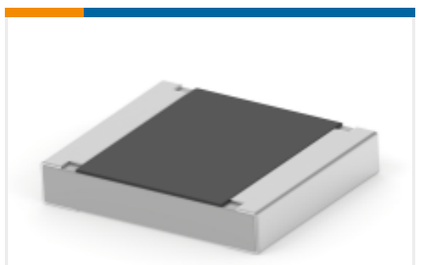

TE Part #2176346-8
CRGCQ 1210 15R 5%

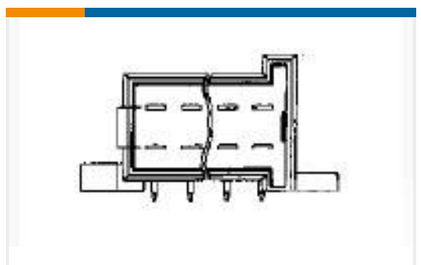

TE Part #828801-7
2X11P MESSERLEI 3,0

TE Part #6142174001
MT3000-3/16-0-SP

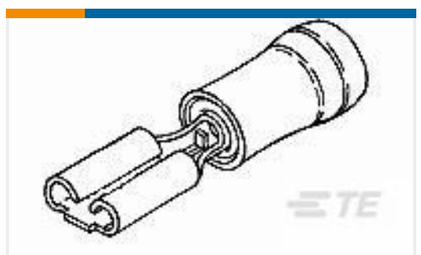

TE Part #9-1377174-5
SMP 0-0165616-2

Documents

Product Drawings

SMP 0-0165563-1

English

CAD Files

3D PDF

3D

Customer View Model

ENG_CVM_CVM_7-1377174-9_C1.2d_dxf.zip

English

Customer View Model

ENG_CVM_CVM_7-1377174-9_C1.3d_igs.zip

English

Customer View Model

ENG_CVM_CVM_7-1377174-9_C1.3d_stp.zip

English

By downloading the CAD file I accept and agree to the Terms and Conditions of use.

Datasheets & Catalog Pages

RADIATION_RESISTANT_PRE-INSULATED_TERMINALS_SPLICES

English

Product Specifications

Application Specification

English