62628-2 ✔ ACTIVE

FASTON | FASTON 110

TE Internal #: 62628-2

PCB Terminals, Tab, Mating Tab Width .11 in [2.8 mm], PCB Hole Diameter 3.68 mm [.145 in], Through Hole - Screw, Unplated Plating, None, FASTON 110

View on TE.com >

Terminals & Splices > PCB Terminals

PCB Terminal Type: **Tab**

Mating Tab Width: **2.8 mm [.11 in]**

Mating Tab Thickness: **.51 mm [.019 in]**

PCB Hole Diameter: **3.68 mm [.145 in]**

Termination Method to Printed Circuit Board: **Through Hole - Screw**

Features

Product Type Features

Terminal Features	Stud Hole

Contact Features

PCB Terminal Type	Tab
Mating Tab Width	2.8 mm[.11 in]
Mating Tab Thickness	.51 mm[.019 in]
Terminal Plating Material	Unplated
Contact Underplating Material	None
Terminal Size	2.8
Terminal Orientation	Straight

Termination Features

Termination Method to Printed Circuit Board	Through Hole - Screw
Product Terminates To	Printed Circuit Board

Dimensions

Stud Diameter	3.68 mm[.145 in]

PCB Hole Diameter	3.68 mm[.145 in]

Usage Conditions

Insulation Option	Uninsulated
Operating Temperature Range	-40 – 105 °C[-40 – 221 °F]

Industry Standards

Agency/Standard	CSA

Packaging Features

Packaging Quantity	1000
Packaging Method	Bag

Product Compliance

For compliance documentation, visit the product page on TE.com>

EU RoHS Directive 2011/65/EU	Compliant
EU ELV Directive 2000/53/EC	Compliant
China RoHS 2 Directive MIIT Order No 32, 2016	No Restricted Materials Above Threshold
EU REACH Regulation (EC) No. 1907/2006	Current ECHA Candidate List: JUNE 2023 (235) Candidate List Declared Against: JAN 2023 (233) Does not contain REACH SVHC
Halogen Content	Low Halogen - Br, Cl, F, I < 900 ppm per homogenous material. Also BFR/CFR/PVC Free
Solder Process Capability	Not applicable for solder process capability

Product Compliance Disclaimer

This information is provided based on reasonable inquiry of our suppliers and represents our current actual knowledge based on the information they provided. This information is subject to change. The part numbers that TE has identified as EU RoHS compliant have a maximum concentration of 0.1% by weight in homogenous materials for lead, hexavalent chromium, mercury, PBB, PBDE, DBP, BBP, DEHP, DIBP, and 0.01% for cadmium, or qualify for an exemption to these limits as defined in the Annexes of Directive 2011/65/EU (RoHS2). Finished electrical and electronic equipment products will be CE marked as required by Directive 2011/65/EU. Components may not be CE marked. Additionally, the part numbers that TE has identified as EU ELV compliant have a maximum concentration of 0.1% by weight in homogenous materials for lead, hexavalent chromium, and mercury, and 0.01% for cadmium, or qualify for an exemption to these limits as defined in the Annexes of Directive 2000/53/EC (ELV). Regarding the REACH Regulation, the information TE provides on SVHC in articles for this part number is based on the latest European Chemicals Agency (ECHA) 'Guidance on requirements for substances in articles' posted at this URL: https://echa.europa.eu/guidance-documents/guidance-on-reach

Compatible Parts

TE Part # 42822-4
250 FASTON TAB TPBR

TE Part # 735187-2
110 FASTON TAB TPBR

TE Part # 62298-1
187 FASTON TAB BR

TE Part # 60443-1
187 FASTON TAB BR

TE Part # 62061-1
110 FASTON TAB BR

TE Part # 62061-2
110 FASTON TAB BR

TE Part # 62836-1
110 FASTON TAB TPBR

TE Part # 62576-1
187 FASTON TAB BR

TE Part # 62628-1
100 FASTON TAB TPST

TE Part # 63633-1
250 FASTON TAB BR

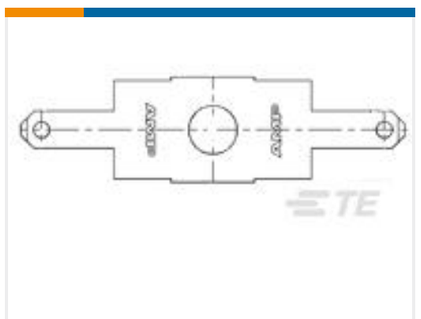

TE Part # 62629-2
110 FASTON TAB BR

TE Part # 60613-1
205 FASTON TAB BR

Also in the Series | FASTON 110

Crimp Terminal Housings(13)

Insertion & Extraction Tools(1)

PCB Terminals(21)

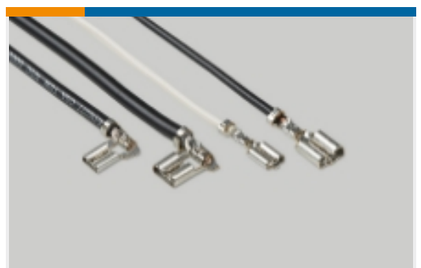

Quick Disconnects(172)

Customers Also Bought

TE Part #1734595-9
1.0 WTB SR VT HDR 9 POS

TE Part #8-34124-1
TERM,SOLIS R 16-14 1/4

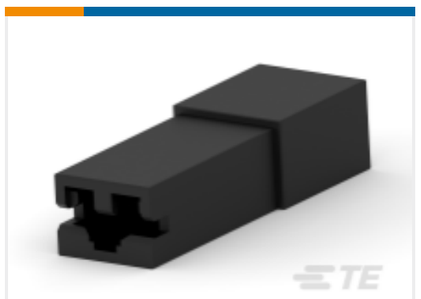

TE Part #1969877-1
187 HIGH TEMP POS LOCK HSG LCP

TE Part #2238177-1
187 X 032 POS LOC REC 20-16 NISTL

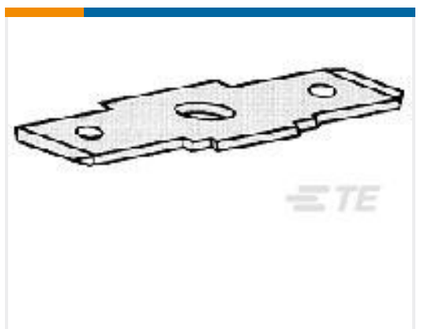

TE Part #62627-3
250 FASTON TAB BR

TE Part #1742669-1
PL EX 187 REC 0.5-1.3MM2 NPST

TE Part #2337275-1
CA, SIDE EXIT CCJ CABLE ASSEMBLY

TE Part #8-34125-1
TERM,SOLIS R 16-14 5/16

TE Part #6457567-1
ASSY, ADPTR, DUP, LC,SR BLUE CER

Documents

Product Drawings

110 FASTON TAB BR

English

CAD Files

3D PDF

3D

Customer View Model

ENG_CVM_CVM_62628-2_M.2d_dxf.zip

English

Customer View Model

ENG_CVM_CVM_62628-2_M.3d_igs.zip

English

Customer View Model

ENG_CVM_CVM_62628-2_M.3d_stp.zip

English

By downloading the CAD file I accept and agree to the Terms and Conditions of use.

Datasheets & Catalog Pages

FASTON Tabs

English

Product Environmental Compliance

TE Material Declaration

English