282349-1 ✔ ACTIVE

Positive Lock | Positive Lock 250

TE Internal #: 282349-1

Quick Disconnects, Receptacle, 20 – 15 AWG Wire Size, .51 – 1.65 mm² Wire Size, Mating Tab Width 6.35 mm [.25 in], Flag, Positive Lock 250

View on TE.com >

Terminals & Splices > Quick Disconnects

Quick Disconnect Terminal Type: **Receptacle**

Wire Size: **.51 – 1.65 mm²**

Mating Tab Width: **6.35 mm [.25 in]**

Mating Tab Thickness: **.81 mm [.032 in]**

Features

Product Type Features

Insertion Force	Low

Configuration Features

Connection Capacity	Single
Compatible With Wire & Cable Type	Discrete Wire

Contact Features

Quick Disconnect Terminal Type	Receptacle
Mating Tab Width	6.35 mm[.25 in]
Mating Tab Thickness	.81 mm[.032 in]
Terminal Orientation	Flag
Contact Base Material	Nickel Silver
Terminal Plating Material	Unplated
Crimp Type	F-Crimp
Barrel Type	Open

Termination Features

Product Terminates To	Wire & Cable

Mechanical Attachment

Extraction Force	7 – 100 Newton
Wire Insulation Support	With
Mating Retention Type	Dimple

Dimensions

Terminal Material Thickness	.41 mm[.016 in]
Product Length	18 mm[.71 in]
Compatible Insulation Diameter Range	2.01 – 3.3 mm[.079 – .13 in]
Wire Size	.51 – 1.65 mm²

Usage Conditions

Insulation Option	Uninsulated
Operating Temperature Range	-30 – 200 °C[-22 – 392 °F]

Industry Standards

Agency/Standard	UL

Packaging Features

Packaging Quantity	2000
Packaging Method	Strip/Reel

Product Compliance

For compliance documentation, visit the product page on TE.com>

EU RoHS Directive 2011/65/EU	Compliant
EU ELV Directive 2000/53/EC	Compliant
China RoHS 2 Directive MIIT Order No 32, 2016	No Restricted Materials Above Threshold
EU REACH Regulation (EC) No. 1907/2006	Current ECHA Candidate List: JUNE 2023 (235) Candidate List Declared Against: JAN 2023 (233) Does not contain REACH SVHC
Halogen Content	Low Halogen - Br, Cl, F, I < 900 ppm per homogenous material. Also BFR/CFR/PVC Free
Solder Process Capability	Not applicable for solder process capability

Product Compliance Disclaimer

This information is provided based on reasonable inquiry of our suppliers and represents our current actual knowledge based on the information they provided. This information is subject to change. The part numbers that TE has identified as EU RoHS compliant have a maximum concentration of 0.1% by weight in homogenous materials for lead, hexavalent chromium, mercury, PBB, PBDE, DBP, BBP, DEHP, DIBP, and 0.01% for cadmium, or qualify for an exemption to these limits as defined in the Annexes of Directive 2011/65/EU (RoHS2). Finished electrical and electronic equipment products will be CE marked as required by Directive 2011/65/EU. Components may not be CE marked. Additionally, the part numbers that TE has identified as EU ELV compliant have a maximum concentration of 0.1% by weight in homogenous materials for lead, hexavalent chromium, and mercury, and 0.01% for cadmium, or qualify for an exemption to these limits as defined in the Annexes of Directive 2000/53/EC (ELV). Regarding the REACH Regulation, the information TE provides on SVHC in articles for this part number is based on the latest European Chemicals Agency (ECHA) 'Guidance on requirements for substances in articles' posted at this URL: https://echa.europa.eu/guidance-documents/guidance-on-reach

Compatible Parts

TE Part # 2-2150401-1
OCEAN_2.0_Applicator-E-100F140F

TE Part # 2-2150401-2
OCEAN_2.0_Applicator-E-100F140F

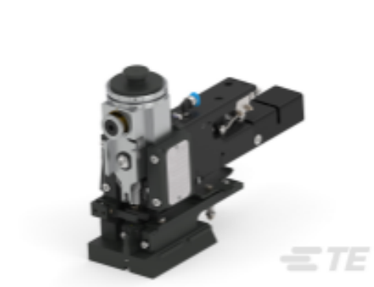

TE Part # 2150401-1
OCEAN_2.0_Applicator-E-100F140F

TE Part # 2150401-2
OCEAN_2.0_Applicator-E-100F140F

TE Part # 680436-1
HDM 9EMPO100F120F T&G

TE Part # 7-2150401-1
OCEAN_2.0_Applicator-E-100F140F

TE Part # 7-2150401-2
OCEAN_2.0_Applicator-E-100F140F

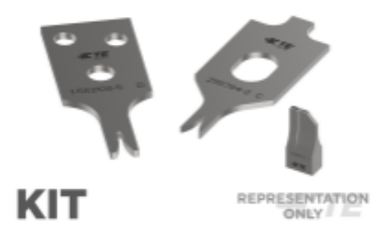

TE Part # 7-2150401-7
OCEAN_2.0_SPARE_PART_KIT-100F140F

Also in the Series | Positive Lock 250

Automotive Terminals(1)

Crimp Terminal Housings(193)

Insertion & Extraction Tools(3)

Insulation Boots & Sleeves(4)

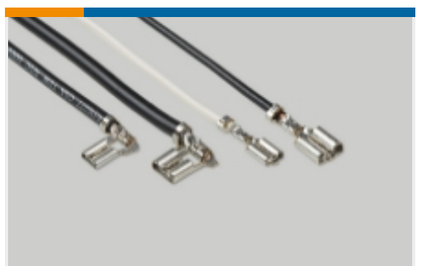

Quick Disconnects(186)

Customers Also Bought

TE Part #215083-4
MICRO-MATCH MOW.04P

TE Part #T4113002081-000
M12,MALE,RA,A CODE,8P,PG9,GOLD

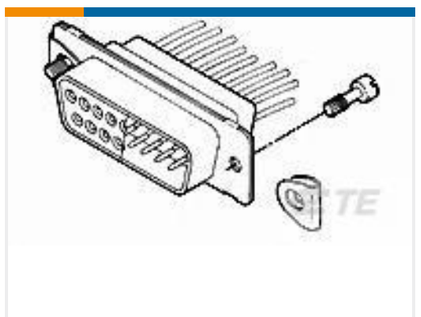

TE Part #5205980-4
SCREW RETAINER KIT

TE Part #104257-2
03 MTE RCPT HSG SR LATCH .100

TE Part #963530-1
EINZELLEITERDICHTNG

TE Part #927775-3
TIMER, RECEPTACLE AND TAB

TE Part #1241416-1
AMP MCP 6.3/4.8K, CONTACT, SWS

TE Part #185010-2
HEADLIGHT HOUSING HOUSING

Documents

Product Drawings

PL 250 FLAG REC 0.5-1.5MM2 0.4 X 44 NISI

English

CAD Files

3D PDF

3D

Customer View Model

ENG_CVM_CVM_282349-1_C.2d_dxf.zip

English

Customer View Model

ENG_CVM_CVM_282349-1_C.3d_igs.zip

English

Customer View Model

ENG_CVM_CVM_282349-1_C.3d_stp.zip

English

By downloading the CAD file I accept and agree to the Terms and Conditions of use.

Product Specifications

6.3mm SRS. Positive Lock Flag Contact

English

Application Specification

English