NUMBER C- 160477

DRAWING MADE IN AMERICAN PROJECTION

REVISIONS					
P	LTR	DESCRIPTION	DATE	DWN	APVD
	G1	REVISED PER ECO-17-002887	01SEP2017	RS	DR

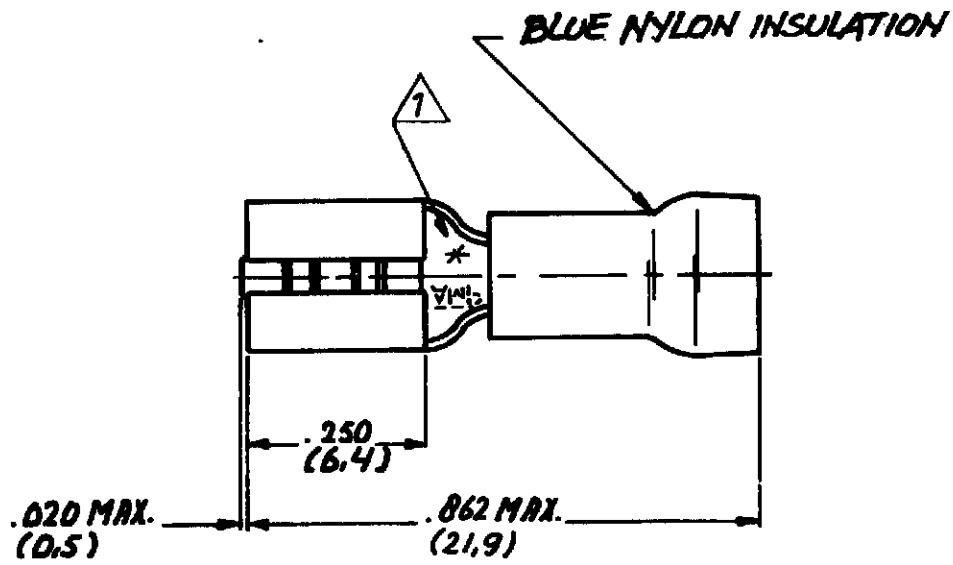

DOC. CENTRE

2 3 JAN. 1992

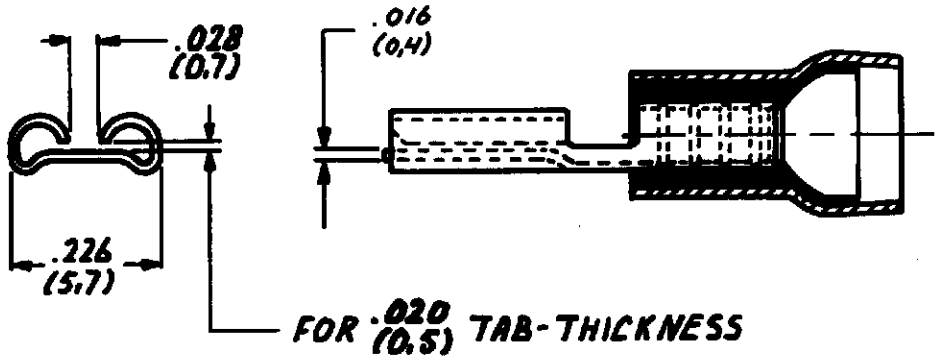

1 ASTERISK * FOR PH.BRONZE VERSION ONLY.

2 PRELIMINARY.

5-160477-7	9-160477-7 TAPE MOUNTED	
5-160477-6	9-160477-6 TAPE MOUNTED	
5-160477-4	9-160477-4 TAPE MOUNTED	
5-160477-3	9-160477-3 TAPE MOUNTED	
9-160477-1	PH. BRONZE	GOLD
9-160477-6	PH.BRONZE	SILVER
9-160477-5	PH.BRONZE	TIN
9-160477-4	BRASS	GOLD 2
9-160477-3	BRASS	SILVER 2
9-160477-2	BRASS	TIN
ORDER NO.	MATERIAL	PLATING

DR RUH 5/80 DATE | DE DATE

CHK DATE | APP DATE

DIMENSIONS IN M.M. DO NOT SCALE PRINT

CUSTOMER COPY FOR REFERENCE ONLY

©1980 BY AMP-HOLLAND N.V. ALL RIGHTS RESERVED A-MP PRODUCTS COVERED BY PATENTS AND/OR PATENTS PENDING.

TE Connectivity

WIRE-RANGE 16-14 AWG 1,0-2,6 mm² | INSUL.-RANGE .130 MAX. DIA 3,3 mm MAX. DIA | FIRST U

SCALE N.T.S. | SIZE A | NO. C- 160477 | REV G1

NAME .187 SER. P.I D.G. FASTON RECEPTACLE

AMP 1282-H