DRAWING MADE IN THIRD ANGLE PROJECTION

THIS DRAWING IS UNPUBLISHED. RELEASED FOR PUBLICATION ,19 .

© COPYRIGHT 19 BY AMP INCORPORATED, HARRISBURG, PA. ALL INTERNATIONAL RIGHTS RESERVED. AMP PRODUCTS MAY BE COVERED BY U.S. AND FOREIGN PATENTS AND/OR PATENTS PENDING.

LOC	DIST	P	F	REVISIONS				
				ZONE	LTR	DESCRIPTION	DATE	APPROVED
AF	50				A	ADDED NOTES 3 & 4 PER 0551-94	11/2/94	JR/PD

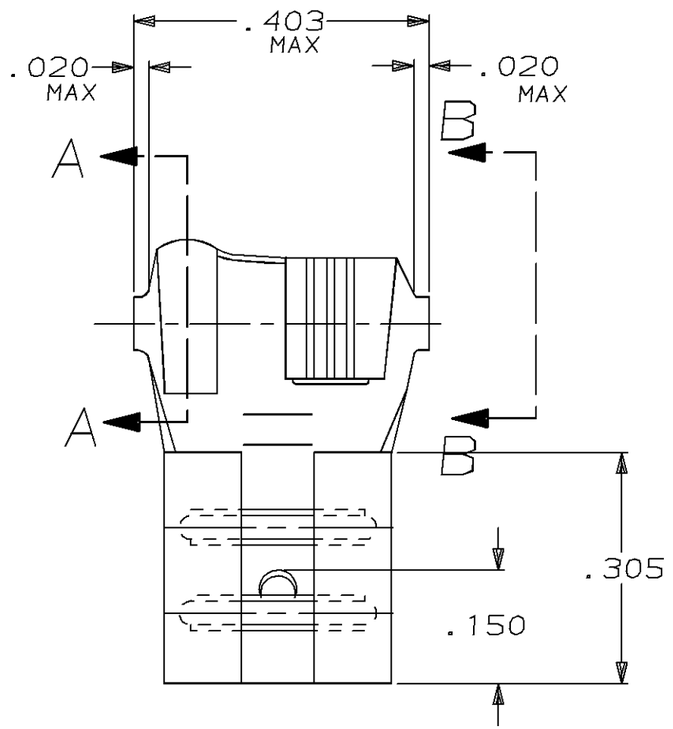

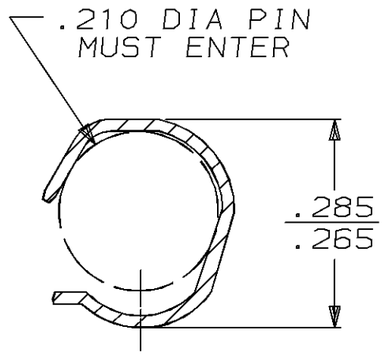

SECTION A–A

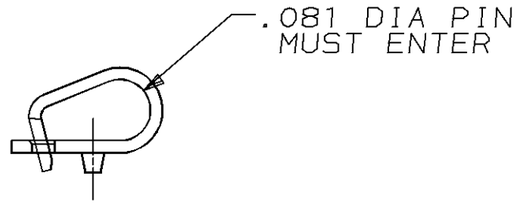

VIEW B–B

1 WIRE AND INSULATION BARRELS TO BE PREFORMED AS SHOWN IN CUT OFF OPERATION.

2 SUPPLIED IN LOOSE PIECE.

3 FOREIGN PRODUCTION ONLY.

4 MAKE FROM P/N 41800

2.79-5.33[.110-.210]	0.8-3.0mm² [18-12]	0.81[.032]	42015
INSULATION RANGE	WIRE SIZE	±0.025[±.001] TAB THK	PART NO

UNLESS OTHERWISE SPECIFIED DIMENSIONS ARE IN MM
TOLERANCES ON:
2 PL DEC ± –
3 PL DEC ± 0.38 [.015]
ANGLES ± –

MATERIAL: T3 PHOS BRZ

FINISH: TIN

DR	11/16/93	JR RUTH
CHK	11/16/93	MS FEHER
APPD	11/16/93	P DESANTIS
APPD	11/16/93	R REINER
PRODUCT SPEC	–	
APPLICATION SPEC	–	
WEIGHT	–	

AMP | AMP INCORPORATED Harrisburg, Pa. 17105

NAME: RECEPTACLE, FASTON,™ FLAG, .250 SERIES

SIZE	FSCM NO	DRAWING NO
B	00779	42015
SCALE NTS		SHEET 1 OF 1