© 2020TE Connectivity. All Rights Reserved.

REVISIONS					
P	LTR	DESCRIPTION	DATE	DWN	APVD
	A	RELEASED PER ECN-21-100667	17FEB2021	BKW	DH
	A1	REVISED PER ECN-23-198737	15FEB2023	BKW	WM

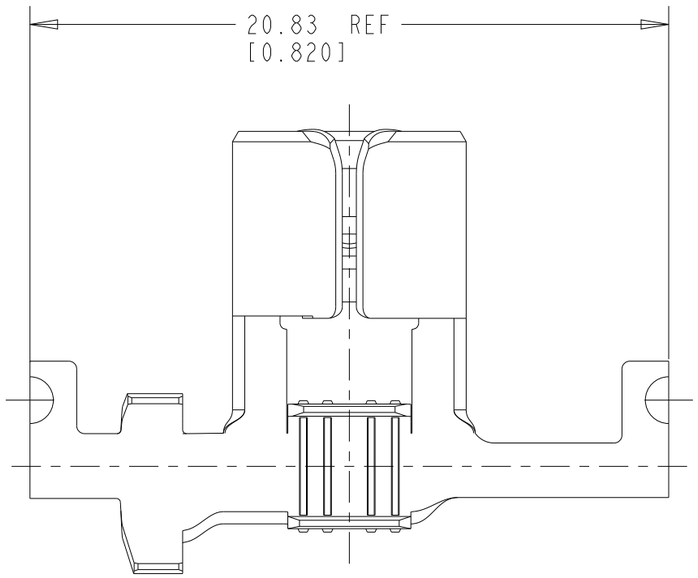

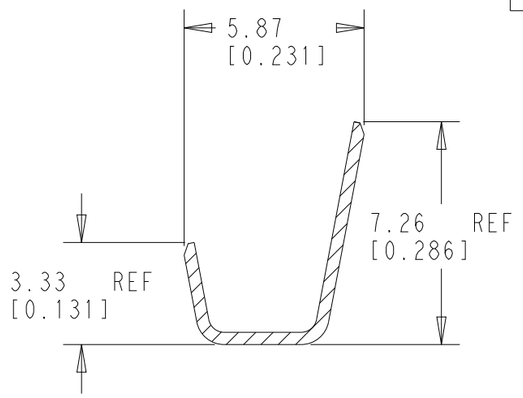

SECTION N-N

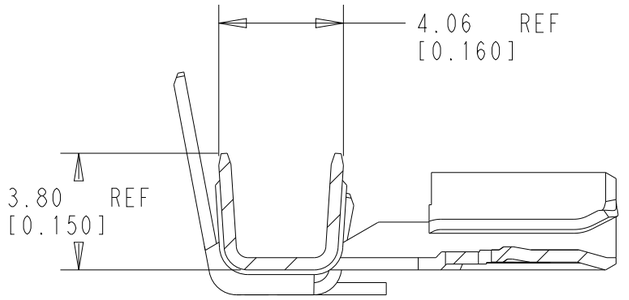

SECTION M-M

1. CONTACT ROLLS TO NOT TOUCH ONE ANOTHER
2. WIRE RANGE: 16-12 AWG
   INSULATION RANGE: .120-.170
3. CONTINUOUS STRIP ON REELS
4. MATING TAB THICKNESS IS 0.81±0.025 [.032±.001]
5. PRELIMINARY PART - NOT RELEASED FOR PRODUCTION
   PART HAS NOT COMPLETED QUALIFICATON TESTING

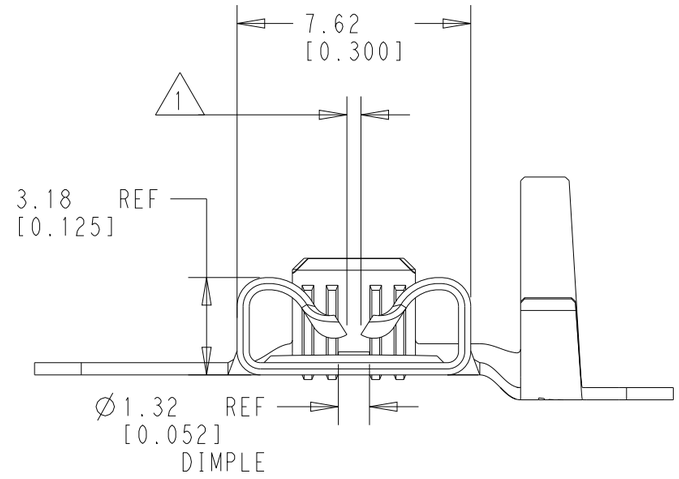

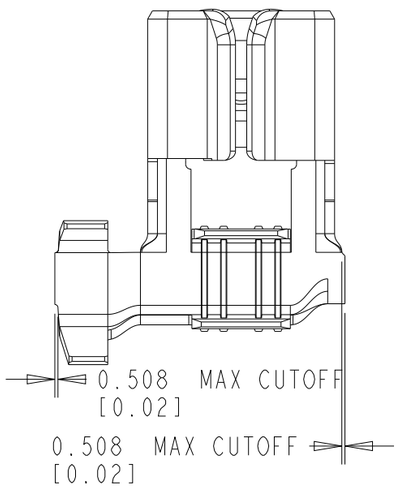

RECOMMENDED CUTOFF
SCALE 4:1

SILVER	BRASS	5 2375767-4
PRE-TIN	BRASS	2375767-3
FINISH	MATERIAL	PART NUMBER

THIS DRAWING IS A CONTROLLED DOCUMENT.

DIMENSIONS: mm [IN]

TOLERANCES UNLESS OTHERWISE SPECIFIED:
0 PLC ±-
1 PLC ±-
2 PLC ±-
3 PLC ±0.25 [.010]
4 PLC ±-
ANGLES ±-

MATERIAL: SEE TABLE

FINISH: SEE TABLE

DWN B. WEAVER 29JUN2020
CHK D. HUMPHREY 29JUN2020
APVD W. MOYER 29JUN2020
PRODUCT SPEC -
APPLICATION SPEC -
WEIGHT -

TE Connectivity

NAME
FASTON RECEPTACLE, LEFT HAND FLAG, 250 SERIES
-

SIZE	CAGE CODE	DRAWING NO	RESTRICTED TO
A3	00779	C-2375767	-

CUSTOMER DRAWING | SCALE 3:1 | SHEET 1 OF 1 | REV A1