THIS DRAWING IS UNPUBLISHED. RELEASED FOR PUBLICATION –,– .
© COPYRIGHT – By – ALL RIGHTS RESERVED.

| LOC | DIST |
|---|---|
| AF | 50 |

REVISIONS

| P | LTR | DESCRIPTION | DATE | DWN | APVD |
|---|---|---|---|---|---|
| | D | REVISED PER ECR-12-013459 | 27NOV2012 | KH | PD |

1 CONTINUOUS STRIP ON REELS.

2 WIRE SIZE IS [#22–#18] AWG.

3 INSULATION RANGE IS 1.52–2.54 [.060–.100] DIA.

4 MATING TAB IS 0.81±0.025[.032±.001].

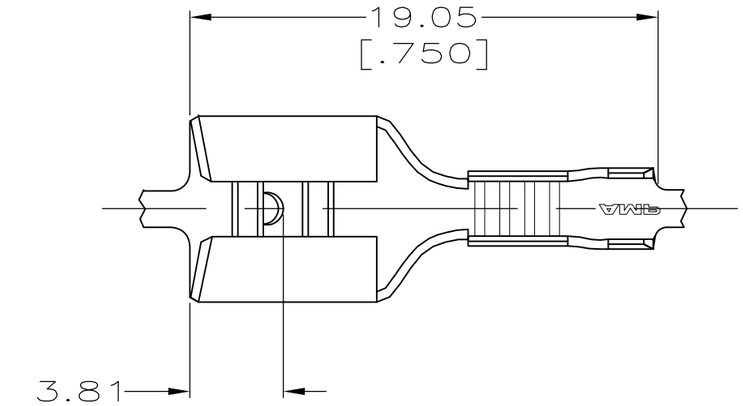


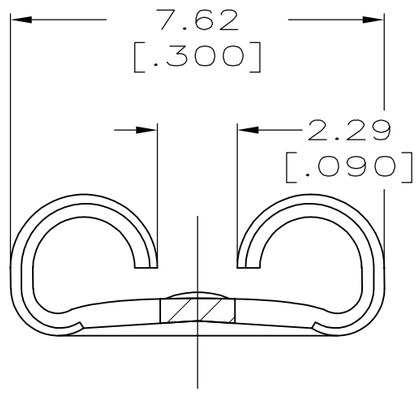


VIEW A–A
SCALE 8:1

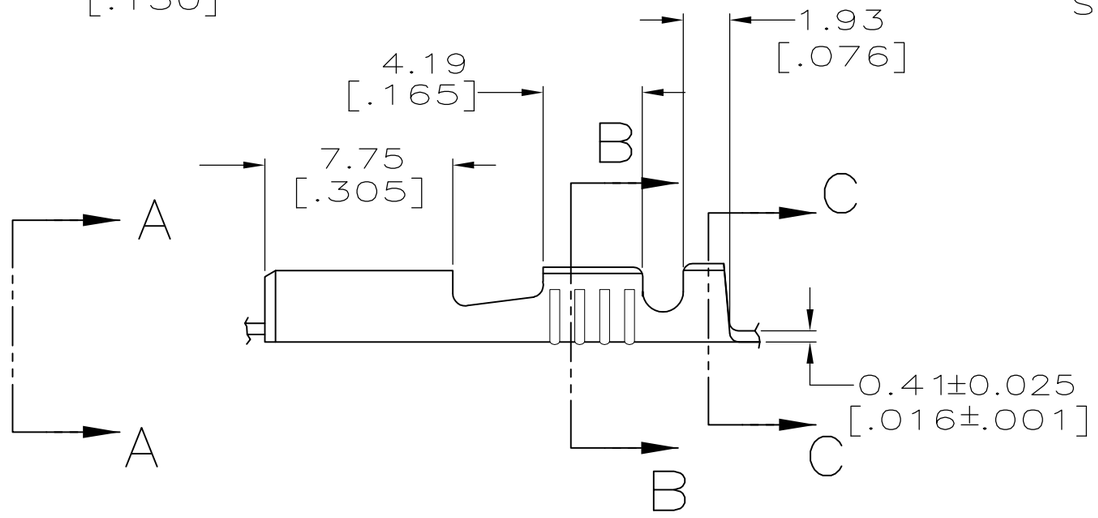


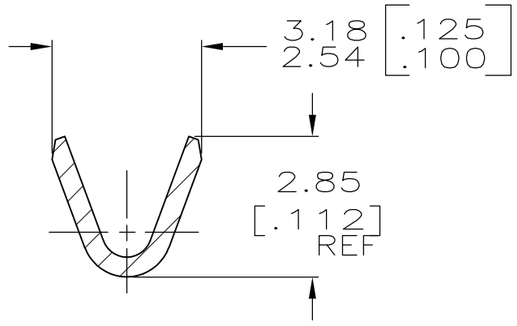


SECTION B–B
SCALE 8:1

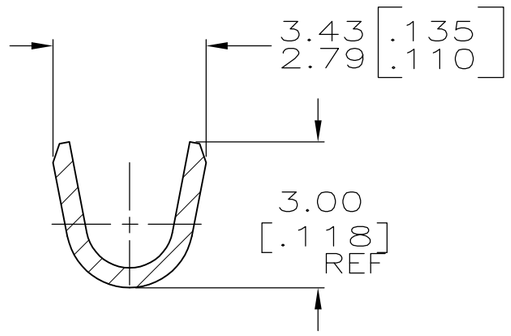


SECTION C–C
SCALE 8:1

62866–1
PART NO.

THIS DRAWING IS A CONTROLLED DOCUMENT.

DIMENSIONS: mm [INCHES]

TOLERANCES UNLESS OTHERWISE SPECIFIED:
0 PLC ± –
1 PLC ± –
2 PLC ± 0.38 [.015]
3 PLC ± –
4 PLC ± –
ANGLES ± –

MATERIAL: BRASS
FINISH: TIN

| | | |
|---|---|---|
| DWN | JR RUTH | 1/29/98 |
| CHK | MS FEHER | 1/29/98 |
| APVD | J GILLESPIE | 1/29/98 |
| PRODUCT SPEC | – | |
| APPLICATION SPEC | – | |
| WEIGHT | – | |

CUSTOMER DRAWING

TE Connectivity

NAME: RECEPTACLE, FASTON, 6.35 [.250] SERIES

| SIZE | CAGE CODE | DRAWING NO | RESTRICTED TO |
|---|---|---|---|
| A3 | 00779 | C-62866 | – |

| SCALE | SHEET | REV |
|---|---|---|
| 4:1 | 1 OF 1 | D |