DWG NO.	DO NOT SCALE	METRIC	3rd ANGLE PROJECTION
	DIMENSIONS IN mm.		

REQ. PER ASSY	ITEM	DESCRIPTION	MATERIAL	FINISH

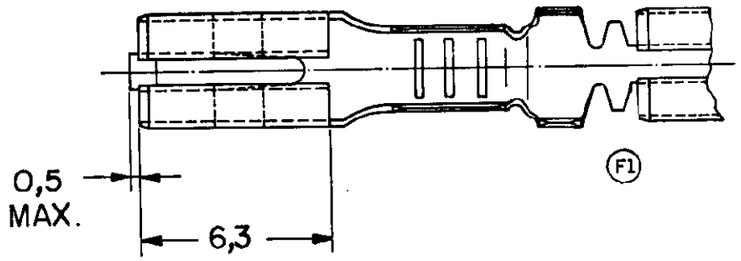

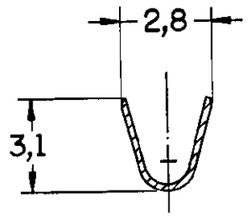

SECÇÃO A-A
SECTION

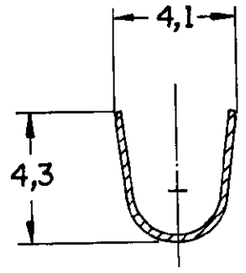

SECÇÃO B-B
SECTION

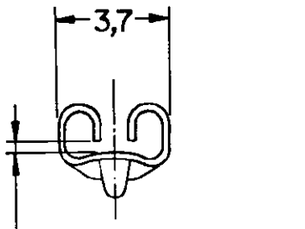

PARA **TAB** DE 0,8
ESPESSURA.
FOR 0,8 TAB.

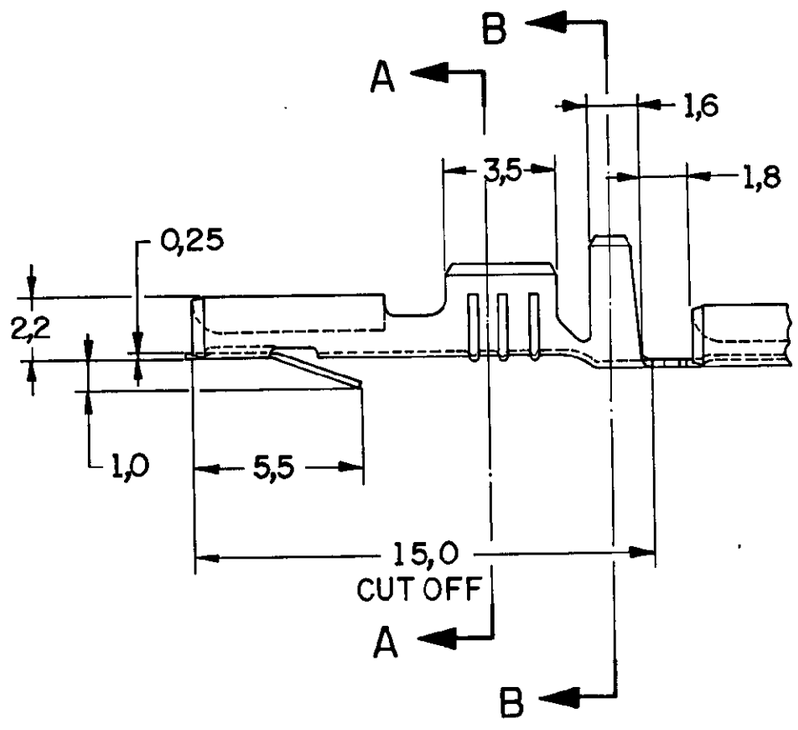

(F1) (F) 1- LOOSE PIECE: VER DESENHO 880680
LOOSE PIECE: SEE DRAWING.

△2 OBSOLETE PARTS

	FINISH	MATERIAL	PART NUMBER
	~~PRÉ ESTANHADO~~	~~BRONZE FOSFOROSO~~	6
	PRÉ ESTANHADO	LATÃO	880635 -5
(F1)		~~BRONZE FOSFOROSO~~	-4
			-3
			△2 ~~-2~~
(F1)		~~LATÃO~~	~~-1~~

CUSTOMER DWG
for REFERENCE ONLY

THIS DRAWING IS UNPUBLISHED | RELEASED FOR PUBLICATION ,19
© COPYRIGHT 19 BY AMP DO BRASIL LTDA S.P. ALL INTERNATIONAL RIGHTS RESERVED AMP PRODUCTS MAY BE COVERED BY U.S. AND FOREIGN PATENTS AND/OR PATENTS PENDING.

ISS	REVISION RECORD	ECN	DR / CHK	DATE
F3	REV. ECO 18-003809		HC / WLS	09MAR18
F2	REVISED PER ECO-09-026444		KK / AEG	26NOV09
F1	REVISED BY	08998	DAR / [illegible]	01-APR-96
F	ADICIONADO NOTA △	921/93	NCL / [illegible]	26.AUG.93
E	REDRAWN WITH CHANGE 2	099/93	NCL / [illegible]	19.JUL.93

TOLERANCES UNLESS OTHERWISE STATED	INS. DIA. RANGE	WIRE RANGE	SCALE
DEC. ± 0,3 ANGLES ± 1°	2,2 - 2,7 mm	>1,0 - 1,5 mm²	—/—

DR. N.C. LAPRESA 02-JUL-93
CHK. J.R. 22-JUL-93
DE. H.R. 22.JUL.93
APP.

AMP do BRASIL LTDA.
São Paulo, Brasil

DESCRIPTION .110 SERIES RECEPTACLE
FASTIN - FASTON

A3	DWG NO C 880635	SHEET 1 OF 1