THIS DRAWING IS UNPUBLISHED. RELEASED FOR PUBLICATION –,– .
© COPYRIGHT – By – ALL RIGHTS RESERVED.

LOC	DIST
AF	50

REVISIONS

P	LTR	DESCRIPTION	DATE	DWN	APVD
	E	REVISED PER ECR–12–013459	27NOV2012	KH	PD

1 CONTINUOUS STRIP ON REELS

2 FEED IS .650±.005

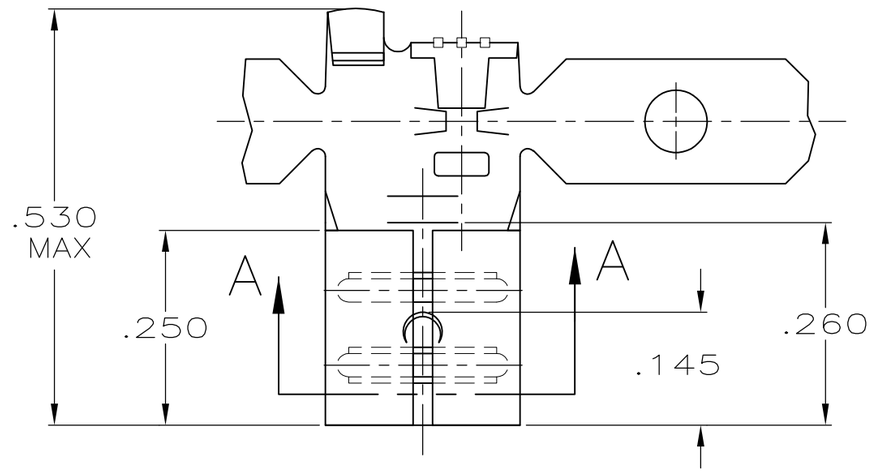

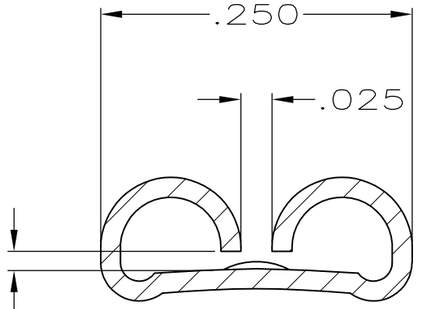

SECTION A–A
SCALE 8:1

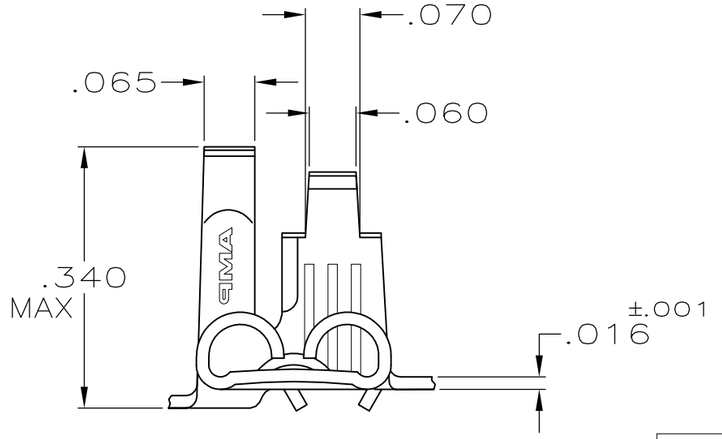

.110–.170	20–14	.020	62354–1
INSULATION RANGE	WIRE SIZE	MATING TAB THK±.001	PART NO.

THIS DRAWING IS A CONTROLLED DOCUMENT.

DIMENSIONS: INCHES

TOLERANCES UNLESS OTHERWISE SPECIFIED:
0 PLC ± –
1 PLC ± –
2 PLC ± –
3 PLC ± .015
4 PLC ± –
ANGLES ± –

MATERIAL: BRASS

FINISH: TIN

DWN	JR RUTH	1/26/90
CHK	MS FEHER	1/26/90
APVD	C MEYERS	1/26/90
PRODUCT SPEC	—	
APPLICATION SPEC	—	
WEIGHT	—	

CUSTOMER DRAWING

TE Connectivity

NAME: RECEPTACLE, FASTON, FLAG, .205 SERIES

SIZE	CAGE CODE	DRAWING NO	RESTRICTED TO
A3	00779	C–62354	—

SCALE	SHEET	REV
5:1	1 OF 1	E