THIS DRAWING IS UNPUBLISHED. RELEASED FOR PUBLICATION –,– .
© COPYRIGHT – BY TYCO ELECTRONICS CORPORATION. ALL INTERNATIONAL RIGHTS RESERVED.

LOC	DIST
AG	53

REVISIONS

P	LTR	DESCRIPTION	DATE	DWN	APVD
	C1	REVISED PER ECO–08–021128	02SEP08	DH	DB

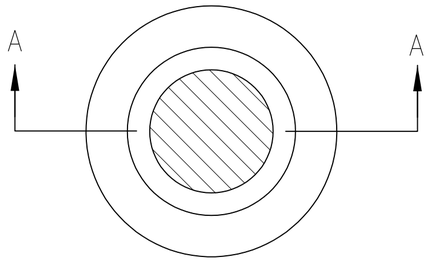

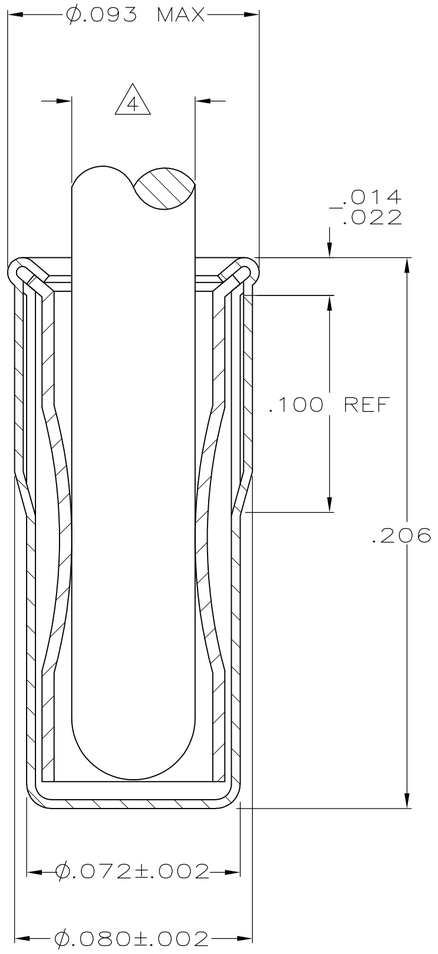

SECTION A–A

1. PLATING:
   SPRING:
   NICKEL UNDERPLATE ALL OVER, MATING SURFACES PLATED TO MEET PERFORMANCE REQUIREMENTS OF TYCO ELECTRONICS SPECIFICATION 108–14008.
   EYELET:
   TIN .000100 THK MIN PER MIL–T–10727.

2. RECOMMENDED HOLE SIZES PLATED OR UNPLATED:
   HAND OR MACHINE INSERTION; .075–.078.

3. TO INSURE PROPER SPRING TENSION DO NOT EXCEED A .002 DIFFERENCE IN PIN DIA WHEN CHANGING TO A SMALLER PIN.

4. RECOMMENDED PIN DIA .040.

THIS DRAWING IS A CONTROLLED DOCUMENT.

DIMENSIONS: INCHES

TOLERANCES UNLESS OTHERWISE SPECIFIED:
0 PLC ± –
1 PLC ± –
2 PLC ± –
3 PLC ± .008
4 PLC ± –
ANGLES ± –

MATERIAL
SPRING; BERYLLIUM COPPER QQ–C–533
EYELET; COPPER QQ–C–576

FINISH 1

DWN R.TALLEY	2–19–90
CHK R.MILLER	2–20–90
APVD F.BOYD	2–20–90
PRODUCT SPEC	—
APPLICATION SPEC	—
WEIGHT	—

Tyco Electronics
Tyco Electronics Corporation
Harrisburg, PA 17105–3608

645508–1
PART NUMBER

NAME
ASSEMBLY, SOCKET, SPRING, MINIATURE
–

SIZE	CAGE CODE	DRAWING NO	RESTRICTED TO
A2	00779	C–645508	—

CUSTOMER DRAWING | SCALE NTS | SHEET 1 OF 1 | REV C1

645508

1471–9 (1/08)