THIS DRAWING IS UNPUBLISHED. RELEASED FOR PUBLICATION -,- .
© COPYRIGHT – BY TYCO ELECTRONICS CORPORATION. ALL RIGHTS RESERVED.

LOC	DIST
GP	00

REVISIONS

P	LTR	DESCRIPTION	DATE	DWN	APVD
	C	REVISED PER 0S11–0088–03	6–12–03	JB	KK

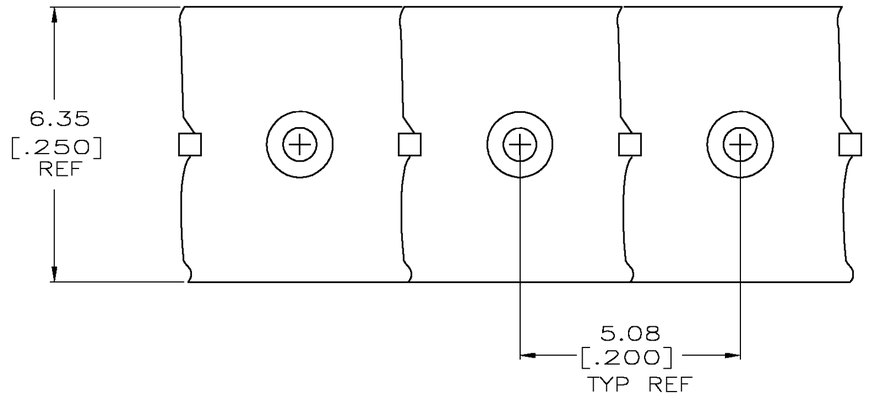

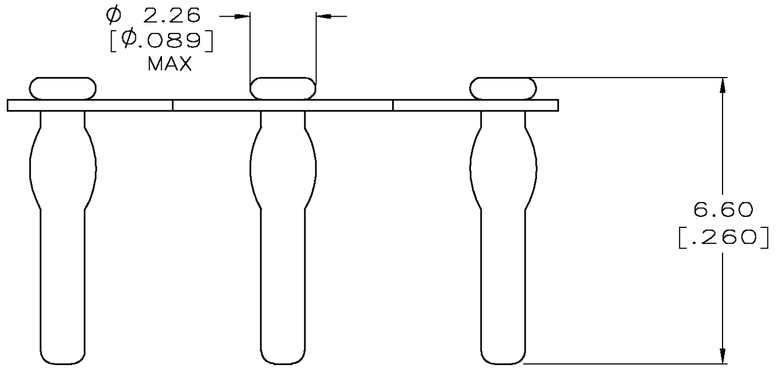

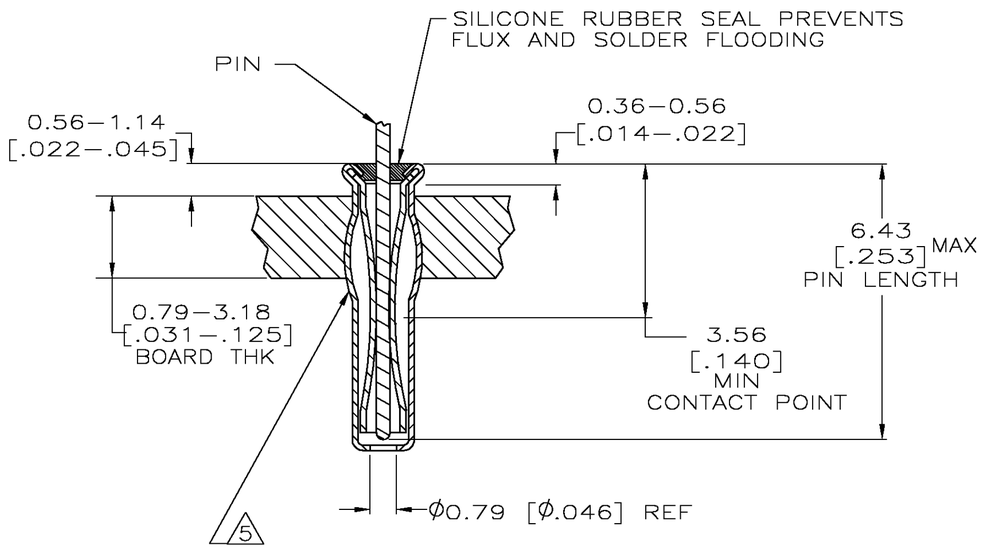

1. MATERIAL:
EYELET– COPPER(QQ–C–576)
SPRING– BERYLLIUM–COPPER (QQ–C–533)
SEALANT– SILICONE RUBBER

2. TIN OR TIN–LEAD PLATE (MIL–T–10727) 0.00381 [.000150] MIN THK

3. PACKAGE 10,000 PER REEL.

4. TO ENSURE 1/2 OZ MIN RETENTION, DO NOT EXCEED 0.05 [.002] DIFFERENCE IN PIN DIA WHEN CHANGING TO A SMALLER DIA PIN.

5. PRODUCT IS OVALIZED FOR RETENTION IN THE P.C. BOARD. THE RECOMMENDED HOLE DIAMETER IS ϕ1.80 [ϕ.071] MINIMUM, +0.08 [.003] MAX. PRIOR TO SOLDERING.

6. TIN PER ASTM B 545, 0.00254 [.000100] MIN THK

PIN DIA 4	SPRING 2	EYELET 2	FINISH
ϕ0.86–ϕ0.94 [ϕ.034–ϕ.037]	6	6	6–645522–1
	2	2	645522–1
			PART NO.

THIS DRAWING IS A CONTROLLED DOCUMENT.

DIMENSIONS: INCHES

TOLERANCES UNLESS OTHERWISE SPECIFIED:
0 PLC ± –
1 PLC ± –
2 PLC ± –
3 PLC ± 0.20[.008]
4 PLC ± –
ANGLES ± –

MATERIAL 1

FINISH: SEE TABLE

DWN C.WHITT	3–16–92
CHK R.TALLEY	3–23–92
APVD S.ROBERTSON	3–23–92
PRODUCT SPEC	—
APPLICATION SPEC	114–26004
WEIGHT	—

Tyco Electronics Corporation

NAME: MINIATURE SPRING SOCKET ASSEMBLY, SERIES 4

SIZE	CAGE CODE	DRAWING NO	RESTRICTED TO
A2	00779	C–645522	—

CUSTOMER DRAWING | SCALE 10:1 | SHEET 1 OF 1 | REV C

645522

AMP 1471–9 REV 31MAR2000

I:\dev\workspace\drawings\custma2.dwg

CUSTOMER DRAWING