THIS DRAWING IS UNPUBLISHED. RELEASED FOR PUBLICATION –,– .
© COPYRIGHT – BY TYCO ELECTRONICS CORPORATION. ALL INTERNATIONAL RIGHTS RESERVED.

LOC	DIST
AG	53

REVISIONS

P	LTR	DESCRIPTION	DATE	DWN	APVD
	E	REVISED PER ECO–09–026264	25MAR2010	HMR	DB

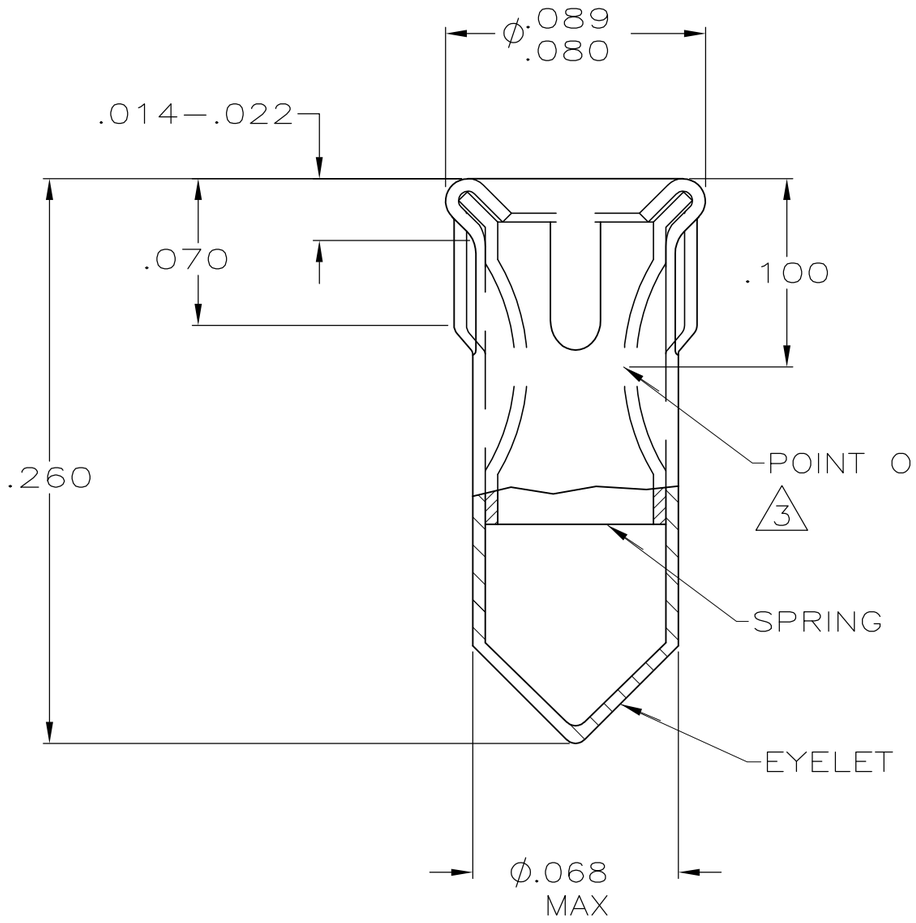

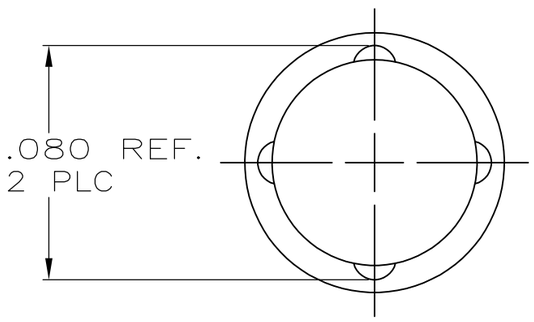

1. MATERIAL: EYELET–COPPER (QQ–C–533)
SPRING–BERYLLIUM COPPER (QQ–C–576).

2. TIN PL. .000150 MIN THK

△3 NICKEL UNDERPLATE ALL OVER, MATING SURFACE PLATED TO MEET PERFORMANCE REQUIREMENTS OF TYCO PRODUCT SPECIFICATION 108–14008.

4. RECOMMENDED HOLE SIZE FOR MACHINE INSERTION .069–.075

△5 TIN PLATE .000100 MIN THK

△6 TIN–LEAD PLATE .000150 MIN THK

	PIN DIA	PIN LENGTH	FINISH SPRING	FINISH EYELET	PART NUMBER
	.037–.041	.100–.210	△3	△6	645500–3
	.037–.041	↑	NOTE 5	↑	645500–2
OBSOLETE	.037–.041	.100–.210	NOTE 3	NOTE 2	645500–1

THIS DRAWING IS A CONTROLLED DOCUMENT.

DIMENSIONS: INCHES

TOLERANCES UNLESS OTHERWISE SPECIFIED:
0 PLC ± –
1 PLC ± –
2 PLC ± –
3 PLC ± .010
4 PLC ± –
ANGLES ± –

MATERIAL –

FINISH SEE TABLE

DWN L.A. McEACHIN 24–JUN–99
CHK G.S. RIDGILL 19–JUL–99
APVD G.S. RIDGILL 19–JUL–99
PRODUCT SPEC —
APPLICATION SPEC —
WEIGHT —

Tyco Electronics
Tyco Electronics Corporation
Harrisburg, PA 17105–3608

NAME
SOCKET, MSS, SERIES 4
—

SIZE	CAGE CODE	DRAWING NO	RESTRICTED TO
A3	00779	C–645500	—

CUSTOMER DRAWING | SCALE NTS | SHEET 1 OF 1 | REV E