This document was generated on 03/07/2016

PLEASE CHECK WWW.MOLEX.COM FOR LATEST PART INFORMATION

Part Number: 0940904080
Status: Active
Overview: Standard Quick-Disconnect Terminals
Description: 2 Circuit Housing for Quick Disconnect Female Terminal, Accepts 6.35 x 0.81mm Tab

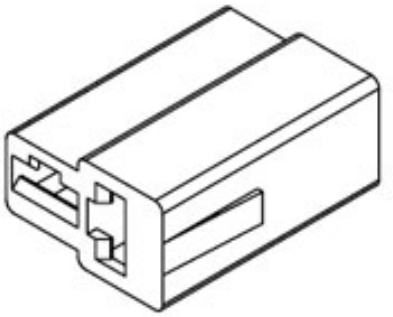

Series image - Reference only

Documents:

3D Model
Drawing (PDF)
Product Specification PS-94090-001 (PDF)
RoHS Certificate of Compliance (PDF)

General

Product Family	Crimp Housings
Series	94090
Application	Power, Wire-to-Wire
Overview	Standard Quick-Disconnect Terminals
Product Name	Quick Disconnect
UPC	800754327916

Physical

Breakaway	No
Circuits (maximum)	2
Color - Resin	Natural
Gender	Female
Glow-Wire Compliant	No
Keying to Mating Part	None
Lock to Mating Part	None
Material - Resin	Nylon
Net Weight	1.460/g
Number of Rows	2
Packaging Type	Carton
Panel Mount	No
Pitch - Mating Interface	5.80mm, 8.30mm
Polarized to Mating Part	No
Ports	2
Stackable	No
Temperature Range - Operating	-40°C to +105°C

Material Info

Reference - Drawing Numbers

Product Specification	PS-94090-001
Sales Drawing	SD-94090-013

EU ELV
Compliant

EU RoHS
Compliant

China RoHS

REACH SVHC
Not Contained Per -ED/79/2015 (17 December 2015)

Halogen-Free Status
Not Relevant

Need more information on product environmental compliance?

Email productcompliance@molex.com
Please visit the Contact Us section for any non-product compliance questions.

China ROHS	Not Relevant
ELV	Compliant

Search Parts in this Series
94090 Series

Use With
6.35 x 0.81mm Tab

This document was generated on 03/07/2016

PLEASE CHECK WWW.MOLEX.COM FOR LATEST PART INFORMATION