THIS DRAWING IS A CONTROLLED DOCUMENT.

REVISIONS					
P	LTR	DESCRIPTION	DATE	DWN	APVD
	B	Mass 9.4 +0.3/-0.2 ergaenzt	11DEZ1979	-	-
	C	Mass 22+0.4/-0.2 war 22±0.3	30SEP1980	-	-
	H1	NEW CAD DRAWING CREATED	20AUG2008	Raab	Goe.
	H2	DRAWING CLARIFICATION	29AUG2017	HO.	BECK

THIS DRAWING IS UNPUBLISHED. RELEASED FOR PUBLICATION 2008
© COPYRIGHT2008 BY - ALL RIGHTS RESERVED.

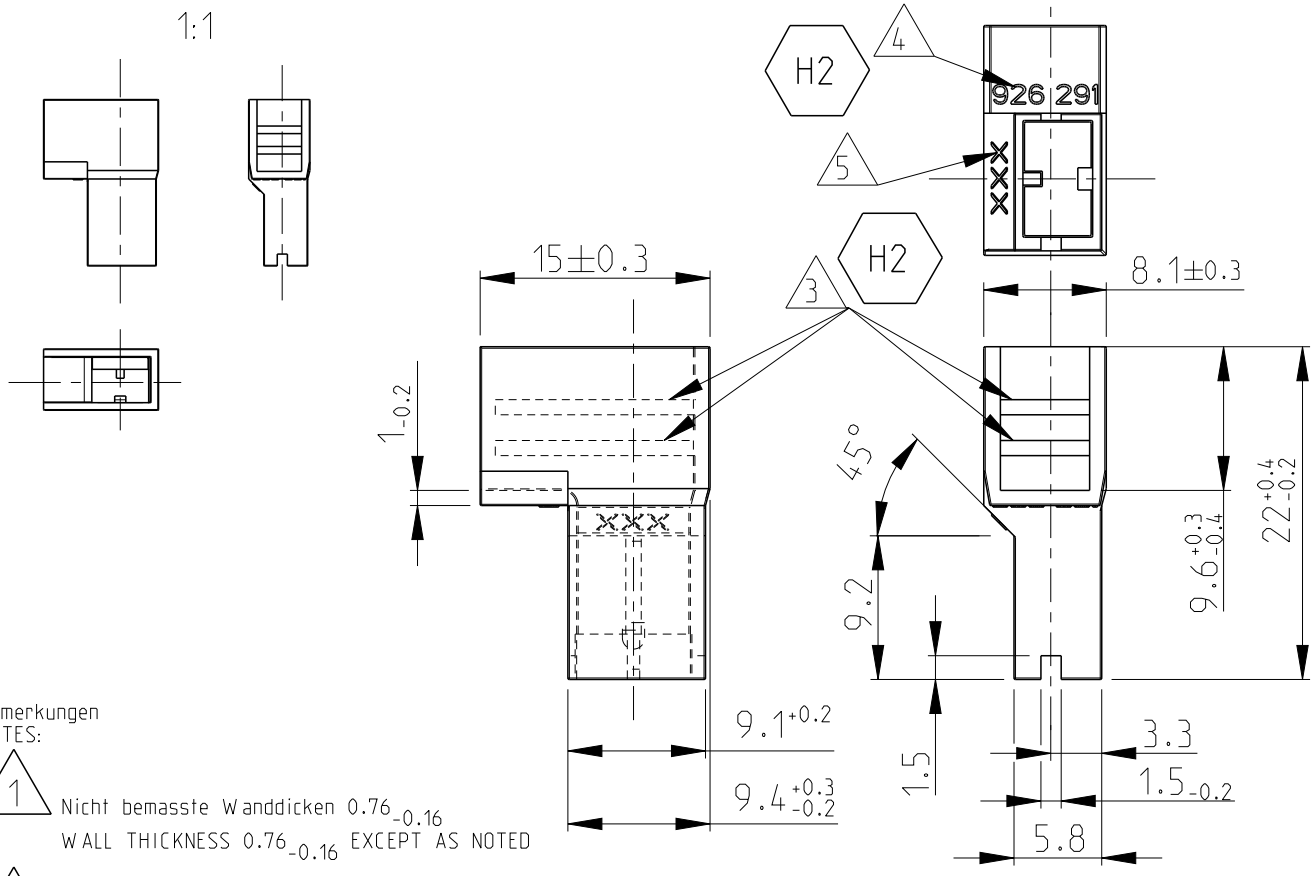

Bemerkungen
NOTES:

1. Nicht bemasste Wanddicken $0.76_{-0.16}$
WALL THICKNESS $0.76_{-0.16}$ EXCEPT AS NOTED

2. Nicht bemasste Radien $R\ 0.3^{+0.2}$
ALL RADII $0.3^{+0.2}$ R EXCEPT AS NOTED

3. Optionale Rippen nach Wahl des Herstellers
OPTIONAL RIBS ACC. TO MANUFACTURER CHOICE

4. Optionale Teilenummer nach Wahl des Herstellers
OPTIONAL PART NUMBER ACC. TO MANUFACTURER CHOICE

5. Optionalr Herstellungscode
nach Wahl des Herstellers
OPTIONAL PRODUCT CODE
ACC. TO MANUFACTURER CHOICE

H2

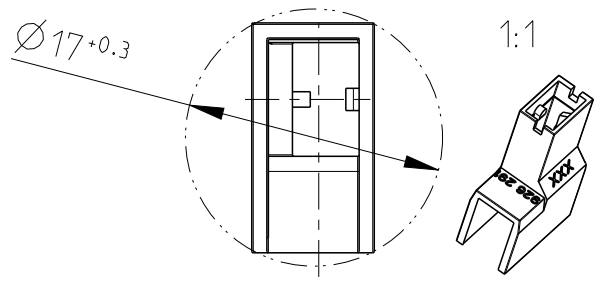

COLOR	MATERIAL	PARTNUMBER	REV.
schwarz/ BLACK	PA 6.6	926291-1	H
natur/ NATURAL	PA 6.6	926291-2	H

DIMENSIONS: mm

TOLERANCES UNLESS OTHERWISE SPECIFIED:
0 PLC ±
1 PLC ±
2 PLC ± ±0.2mm
3 PLC ±
4 PLC ±
ANGLES ±1.5°

DWN Raab, S. 19AUG2008
CHK Goeppel, C. 20AUG2008
APVD Bleicher, M. 21AUG2008
PRODUCT SPEC -
APPLICATION SPEC -
WEIGHT 0.7 g

MATERIAL -
FINISH -

TE Connectivity

NAME Positive Lock Gehaeuse der Serie 6,3 90 Grad abgewinkelt
POSITIVE LOCK FLAG HOUSING

SIZE	CAGE CODE	DRAWING NO	RESTRICTED TO
A4	00779	C-926291	-

CUSTOMER DRAWING

SCALE	SHEET	REV
2:1	1 OF 1	H2