Data sheet

2310.2 RKD 4/LED1(RD)/6V DC BG

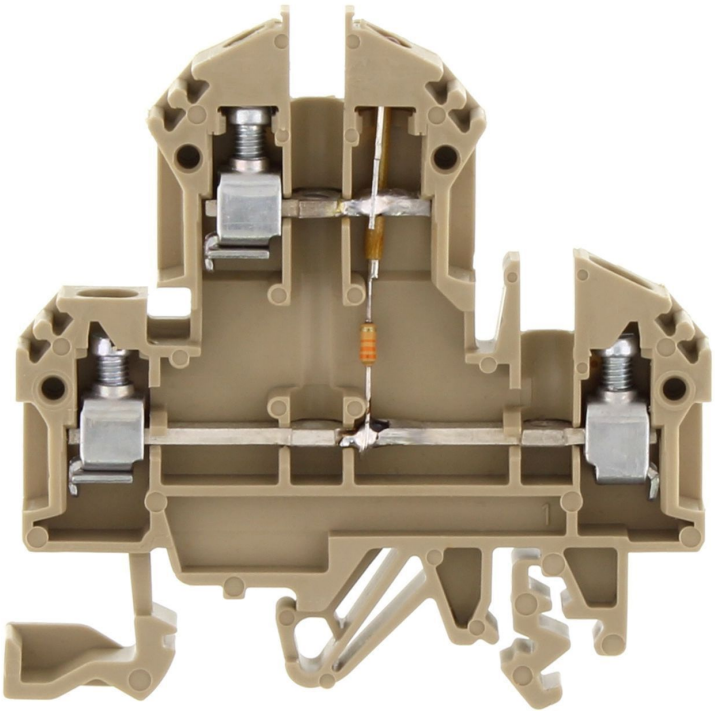

Double-level terminal with electronic components, Screw connection, Mounting type:Mounting rail TS 35/7.5 and TS 32, Rated cross-section: 4 mm², Width: 6 mm, Colour: Beige

Business data

Article number	2310.2
Article name	RKD 4/LED1(RD)/6V DC BG
GTIN (EAN)	4044211050979
Packaging unit	100
Quantity unit	PC
Weight per piece (not including packaging)	12.6 g
Weight per piece (including packaging)	13.37 g
Unit of weight	G
Customs number	85369010
Country of origin	BG
Product description	Double-level terminals with electronic components
Colour	Beige

Data sheet

2310.2 RKD 4/LED1(RD)/6V DC BG

Technical data

Dimensions	
Length	60.2 mm
Width	6 mm
Height TS 35/7.5	61 mm
Height TS 32	65.5 mm
Ratings	
Rated voltage	6 DC V
Rated current	10 A
Rated cross-section	4 mm²
Rated impulse voltage	6 kV
Overvoltage category	III
Contamination degree	3
Connection data	
Connection principle	Screw connection
Connection position	Lateral
Number of terminals per level	2
Number of levels	2
Wire cross-section single-core (rigid) / stranded, min.	0.2 mm²
Wire cross-section single core (rigid)/stranded, max.	4 mm²
Wire cross-section stranded, min.	0.2 mm²
Wire cross-section stranded, max.	4 mm²
Wire cross-section stranded with wire-end ferrules, min.	0.2 mm²
Wire cross-section stranded with wire-end ferrules, max.	4 mm²
Wire cross-section AWG, min.	22
Wire cross-section AWG, max.	12
Stripping length	9 mm
Screw head	Slotted
Screw threading	M 3
Tightening torque, min.	0.5 Nm
Tightening torque, max.	1 Nm

Data sheet

2310.2 RKD 4/LED1(RD)/6V DC BG

Technical data

Materials

Insulation housing	Polyamide 6.6
Flammability class UL 94	V-2
Working temperature, min.	-40 °C
Working temperature, max.	105 °C

Further technical data

Mounting type	Mounting rail TS 35/7.5 and TS 32
Gauge plug acc. to EN 60 947-1	A4
Number of cross-connection channels	2
End plate required	✓
Voltage illuminated display	6 DC V
Cross-current via illuminated display	5 mA
Colour of lamp	Red

Environmental Product Compliance

REACH Conform	yes
REACH Reference date	2022-06-10
REACH Candidate Substance Note	No
RoHS Conform	yes

Approvals

Standards and regulations	
EAC approval	TR ZU 004/2011
EAC approval granted	yes

CSA approval	
CSA approval	C22.2 No 158
CSA approval granted	yes
CSA Usegroup C: rated voltage	300 V
CSA Usegroup C: rated current	25 A
CSA wire cross-section AWG, min.	22
CSA wire cross-section AWG, max.	12
CSA stripping length	9 mm
CSA torque, max.	1 Nm
CSA torque, min.	0.5 Nm

KEMA KEUR approval	
KEMA KEUR approval	EN 60947-7-1:2009
KEMA KEUR approval granted	yes
KEMA rated voltage	500 V
KEMA rated current	32 A
KEMA rated impulse voltage	6 kV
KEMA wire cross-section single core (rigid), min.	0.2 mm²
KEMA wire cross-section single-core (rigid), max.	4 mm²
KEMA wire cross-section stranded, min.	0.2 mm²
KEMA wire cross-section stranded, max.	4 mm²

Approvals

UL Recognized

UL approval	UL 1059
UL Usegroup C: rated voltage	300 V
UL Usegroup C: rated current	30 A
UL wire cross-section single-core (rigid) AWG, min.	22
UL wire cross-section single-core (rigid) AWG, max.	10
UL wire cross-section stranded AWG, min.	22
UL wire cross-section stranded AWG, max.	10
UL torque	7 Lb In
UL wire material	Cu
UL factory wiring	1
UL field wiring	1
UL Recognized	1

German Lloyd approval

DNV GL Location Classes	C
DNV GL approval granted	1
DNV GL rated cross-section	4 mm²
DNV GL rated current	34 A
DNV GL rated voltage	500 V
DNV GL test standard	IEC 60947-7-1:2002

Media

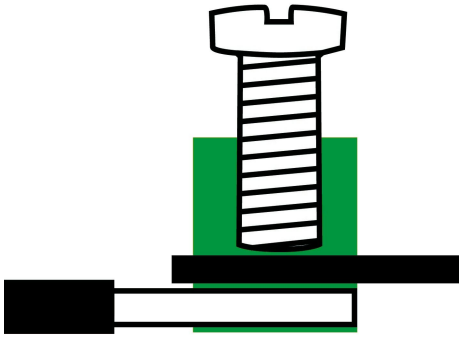

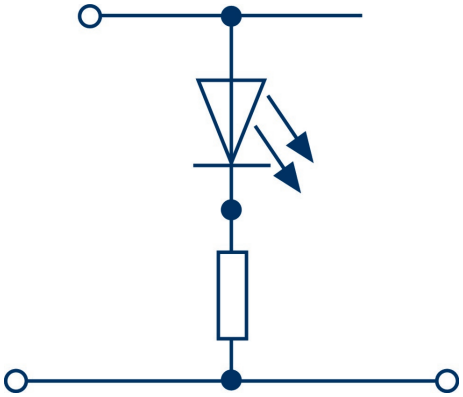

Accessories

End plate

End plate, Width: 1.5 mm, Colour: Beige

Article number	Article name	GTIN (EAN)	Packaging unit
2101.2	AP 4 BG	4044211151652	20

Insulation plate

Insulation plate, Colour: Beige

Article number	Article name	GTIN (EAN)	Packaging unit
2566.2	TRS 3 BG	4044211053567	100 ST

Cross-connector

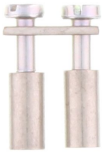

Cross-connector, No. of poles: 2, Mounting type: Can be screwed on, Width: 10.5 mm, Rated cross-section: 4 mm², Colour: natural

Article number	Article name	GTIN (EAN)	Packaging unit
2087.0	Q 2	4044211048952	50 ST

Cross-connector, No. of poles: 4, Mounting type: Can be screwed on, Width: 22.7 mm, Rated cross-section: 4 mm², Colour: natural

Article number	Article name	GTIN (EAN)	Packaging unit
2089.0	Q 4	4044211048976	20 ST

Cross-connector, No. of poles: 10, Mounting type: Can be screwed on, Width: 59.3 mm, Rated cross-section: 4 mm², Colour: natural

Article number	Article name	GTIN (EAN)	Packaging unit
2090.0	Q 10	4044211048983	10 ST

Cross-connector

Cross-connector, No. of poles: 3, Mounting type: Can be screwed on, Width: 16.6 mm, Rated cross-section: 4 mm², Colour: natural

Article number	Article name	GTIN (EAN)	Packaging unit
2088.0	Q 3	4044211048969	50 ST

End stop

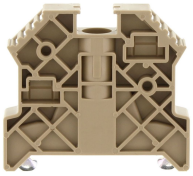

End stop, Mounting type: Mounting rail TS 35/7.5, Width: 9.5 mm, Colour: Beige

Article number	Article name	GTIN (EAN)	Packaging unit
2828.0	ES 35/K/ST BG	4044211055547	50

Screwdriver

Screwdriver with bare blade, Colour: Black-grey

Article number	Article name	GTIN (EAN)	Packaging unit
1086.0	SDB 0,6x3,5	4044211014797	1 ST

Quick marking

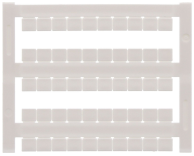

Terminal marker / Pocket Maxicard, Length: 5 mm, Width: 6 mm, Colour: White

Article number	Article name	GTIN (EAN)	Packaging unit
4702.7	PMC SB 6/50 WH	4044211089986	500 ST

Socket plug

Socket plug, M 2.5, Colour: natural

Article number	Article name	GTIN (EAN)	Packaging unit
2075.0	STB 8,5/2,3	4044211048839	50 ST

Test plug

Test plug, Colour: Red

Article number	Article name	GTIN (EAN)	Packaging unit
2007.0	PS 2,3	4044211048105	20 ST