Data sheet

3501.2 ZRK 2,5/3A BG

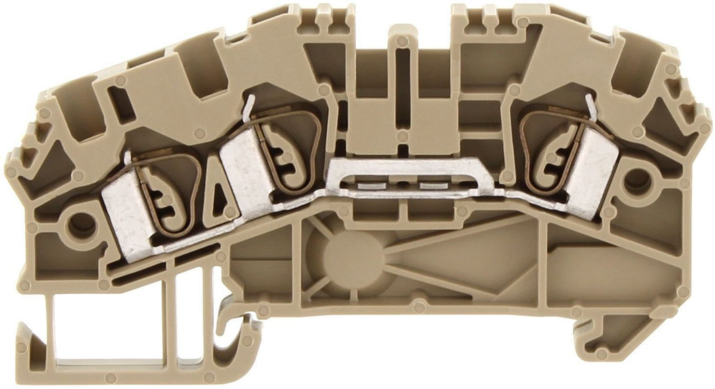

Feed-through terminal, Tension-spring connection, Mounting type: Mounting rail TS 35/7.5, Rated cross-section: 2.5 mm², Width: 5.1 mm, Colour: Beige

Business data

Article number	3501.2
Article name	ZRK 2,5/3A BG
GTIN (EAN)	4044211151690
Packaging unit	100
Quantity unit	PC
Weight per piece (not including packaging)	8.8 g
Weight per piece (including packaging)	9.6 g
Unit of weight	G
Customs number	85369010
Country of origin	BG
Prio-Article	3501.2
Product description	Feed-through terminal

Data sheet

3501.2 ZRK 2,5/3A BG

Technical data

Dimensions	
Length	71.3 mm
Width	5.1 mm
Height TS 35/7.5	39 mm
Ratings	
Rated voltage	800 V
Rated current	24 A
Rated cross-section	2.5 mm²
Rated impulse voltage	8 kV
Overvoltage category	III
Contamination degree	3
Maximum power dissipation for nominal condition	0.77 W
Connection data	
Connection principle	Tension-spring connection
Connection position	Diagonal
Connections	3
Number of terminals per level	3
Number of levels	1
Wire cross-section single-core (rigid) / stranded, min.	0.5 mm²
Wire cross-section single core (rigid)/stranded, max.	4 mm²
Wire cross-section stranded, min.	0.5 mm²
Wire cross-section stranded, max.	4 mm²
Wire cross-section stranded with wire-end ferrules, min.	0.5 mm²
Wire cross-section stranded with wire-end ferrules, max.	2.5 mm²
Wire cross-section AWG, min.	20
Wire cross-section AWG, max.	12
Stripping length	10 mm
Materials	
Insulation housing	Polyamide 6.6
Flammability class UL 94	V-0
Working temperature, min.	-40 °C
Working temperature, max.	120 °C

Technical data

Further technical data

Mounting type	Mounting rail TS 35/7,5
Gauge plug acc. to EN 60 947-1	A3
Number of cross-connection channels	2
End plate required	✓
Number of test pick-off options	2

Environmental Product Compliance

REACH Conform	yes
REACH Reference date	2022-06-10
REACH Candidate Substance Note	No
RoHS Conform	yes

Approvals

Standards and regulations	
EAC approval	TR ZU 004/2011
EAC approval granted	yes

CSA approval	
CSA approval	C22.2 No 158
CSA approval granted	yes
CSA Usegroup C: rated voltage	600 V
CSA Usegroup C: rated current	27 A
CSA wire cross-section AWG, min.	20
CSA wire cross-section AWG, max.	12
CSA stripping length	10 mm

CSAus approval	
CSAus approval	UL 1059
CSAus approval granted	yes
CSAus Usegroup C: rated voltage	600 V
CSAus Usegroup C: rated current	27 A
CSAus wire cross-section AWG, min.	20
CSAus wire cross-section AWG, max.	12
CSAus stripping length	10 mm

KEMA KEUR approval	
KEMA KEUR approval	EN 60947-7-1:2009
KEMA KEUR approval granted	yes
KEMA rated voltage	800 V
KEMA rated current	24 A
KEMA rated impulse voltage	8 kV
KEMA wire cross-section single core (rigid), min.	0.5 mm²
KEMA wire cross-section single-core (rigid), max.	4 mm²
KEMA wire cross-section stranded, min.	0.5 mm²
KEMA wire cross-section stranded, max.	4 mm²

Approvals

UL Recognized

UL approval	UL 1059
UL Usegroup B: rated voltage	600 V
UL Usegroup B: rated current	27 A
UL Usegroup C: rated voltage	600 V
UL Usegroup C: rated current	27 A
UL Usegroup D: rated voltage	600 V
UL Usegroup D: rated current	27 A
UL wire cross-section single-core (rigid) AWG, min.	20
UL wire cross-section single-core (rigid) AWG, max.	12
UL wire cross-section stranded AWG, min.	20
UL wire cross-section stranded AWG, max.	12
UL wire material	Cu
UL factory wiring	1
UL field wiring	1
UL Recognized	1

DNV GL Approval

DNV GL Location Classes	Temperature: B, Humidity: B, Vibration: A
DNV GL approval granted	1
DNV GL rated cross-section	2.5 mm²
DNV GL rated current	24 A
DNV GL rated voltage	800 V
DNV GL test standard	IEC 60947-7-1:2009
DNV GL wire cross-section single-core (rigid), max.	4 mm²
DNV GL wire cross-section stranded, max.	2.5 mm²

Media

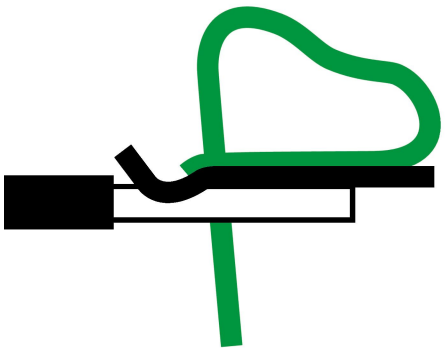

Accessories

End plate

End plate, Width: 2 mm, Colour: Beige

Article number	Article name	GTIN (EAN)	Packaging unit
3701.2	ZAP 2,5/3A BG	4044211060053	50

Actuating tool

Actuating tool, No. of poles: 1, Colour: Black

Article number	Article name	GTIN (EAN)	Packaging unit
3808.0	BWMA 1 (0,5 x 3,5 mm)	4044211078850	1 ST

End stop

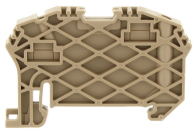

End stop, Mounting type: Mounting rail TS 35/7.5 and TS 35/15, Width: 6 mm, Colour: Beige

Article number	Article name	GTIN (EAN)	Packaging unit
3748.2	ZES 35 BG	4044211060572	50

Test adapter

Test adapter, Pitch size: 5.1 mm, Colour: Beige

Article number	Article name	GTIN (EAN)	Packaging unit
3740.2	ZTA 2,5 BG	4044211060497	10 ST

Insulated cross-connector

Insulated cross-connector, No. of poles: 7, Mounting type: Plug in, Width: 34.6 mm,Rated cross-section: 2.5 mm², Colour: Yellow

Article number	Article name	GTIN (EAN)	Packaging unit
3715.8	ZQI 2,5/7 YE	4044211060336	20

Insulated cross-connector, No. of poles: 2, Mounting type: Plug in, Width: 9.1 mm, Rated cross-section: 2.5 mm², Colour: Yellow

Article number	Article name	GTIN (EAN)	Packaging unit
3710.8	ZQI 2,5/2 YE	4044211060282	50

Insulated cross-connector, No. of poles: 10, Mounting type: Plug in, Width: 49.9 mm, Rated cross-section: 2.5 mm², Colour: Yellow

Article number	Article name	GTIN (EAN)	Packaging unit
3718.8	ZQI 2,5/10 YE	4044211060367	10

Insulated cross-connector, No. of poles: 3, Mounting type: Plug in, Width: 14.2 mm, Rated cross-section: 2.5 mm², Colour: Yellow

Article number	Article name	GTIN (EAN)	Packaging unit
3711.8	ZQI 2,5/3 YE	4044211060299	50

Insulated cross-connector, No. of poles: 5, Mounting type: Plug in, Width: 24.4 mm, Rated cross-section: 2.5 mm², Colour: Yellow

Article number	Article name	GTIN (EAN)	Packaging unit
3713.8	ZQI 2,5/5 YE	4044211060312	20

Insulated cross-connector, No. of poles: 8, Mounting type: Plug in, Width: 39.7 mm, Rated cross-section: 2.5 mm², Colour: Yellow

Article number	Article name	GTIN (EAN)	Packaging unit
3716.8	ZQI 2,5/8 YE	4044211060343	10

Insulated cross-connector, No. of poles: 4, Mounting type: Plug in, Width: 19.3 mm, Rated cross-section: 2.5 mm², Colour: Yellow

Article number	Article name	GTIN (EAN)	Packaging unit
3712.8	ZQI 2,5/4 YE	4044211060305	20

Insulated cross-connector, No. of poles: 6, Mounting type: Plug in, Width: 29.5 mm, Rated cross-section: 2.5 mm², Colour: Yellow

Article number	Article name	GTIN (EAN)	Packaging unit
3714.8	ZQI 2,5/6 YE	4044211060329	20

Insulated cross-connector, No. of poles: 99, Mounting type: Plug in, Width: 500 mm, Rated cross-section: 2.5 mm², Colour: Yellow

Article number	Article name	GTIN (EAN)	Packaging unit
3719.8	ZQI 2,5/0,5 m/99 Pole YE	4044211060374	2

Quick marking

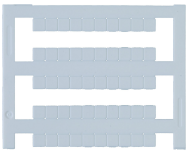

Terminal marker / Pocket Maxicard, Length: 5 mm, Width: 5 mm, Colour: White

Article number	Article name	GTIN (EAN)	Packaging unit
4600.7	PMC SB 5/50 WH	4044211088903	500 ST

Four-way cover

Cover, Length: 6.7 mm, Width: 20.4 mm, Colour: Yellow

Article number	Article name	GTIN (EAN)	Packaging unit
3706.0	ZAD 2,5/4/B YE	4044211060244	20 ST

Reducing sleeves

Reducing sleeve, Width: 51 mm, Pitch size: 5.1 mm, Colour: Grey

Article number	Article name	GTIN (EAN)	Packaging unit
3751.6	ZRH 2,5/0,25-0,5 GR	4044211060602	1000 ST

Reducing sleeve, Width: 51 mm, Pitch size: 5.1 mm, Colour: White

Article number	Article name	GTIN (EAN)	Packaging unit
3750.7	ZRH 2,5/0,13-0,2 WH	4044211060596	1000 ST

Data sheet

3501.2 ZRK 2,5/3A BG

Reducing sleeves

Reducing sleeve, Width: 51 mm, Pitch size: 5.1 mm, Colour: Black

Article number	Article name	GTIN (EAN)	Packaging unit
3752.4	ZRH 2,5/0,75-1,0 BK	4044211060619	1000 ST