Data sheet

3290.4 FSIK 4/2A BK

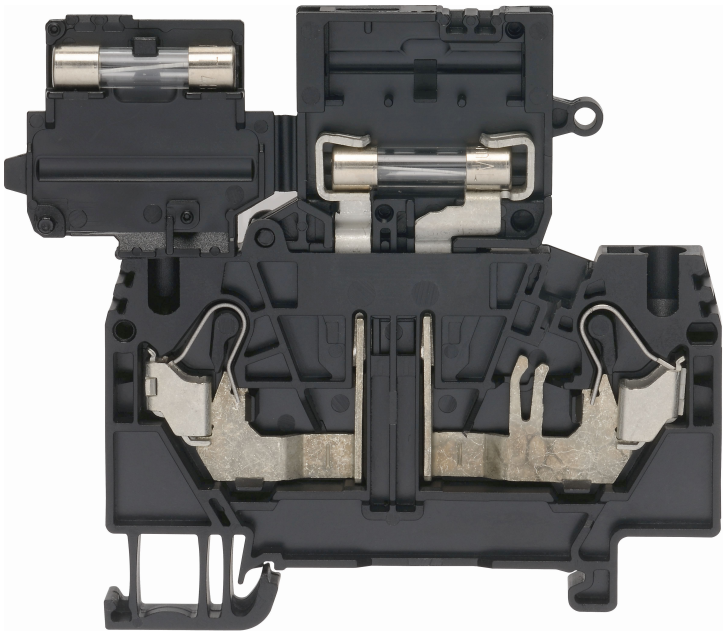

Fuse-disconnect terminal, Push-in connection, Mounting type: Mounting rail TS 35/7.5, Rated cross-section: 4 mm², Width: 6 mm, Colour: Black

RAL: 9005

Business data

Article number	3290.4
Article name	FSIK 4/2A BK
GTIN (EAN)	4044211180287
Packaging unit	25
Quantity unit	PC
Weight per piece (not including packaging)	16.06 g
Weight per piece (including packaging)	17.94 g
Unit of weight	G
Customs number	85369010
Country of origin	BG
Product description	Fuse-disconnect terminal
Colour	Black

Data sheet

3290.4 FSIK 4/2A BK

Technical data

Dimensions

Length	67.5 mm
Width	6.1 mm
Height	69 mm
Height TS 35/7.5	70 mm

Ratings

Rated voltage (determined by the illuminated display and fuse being used)	250 V
Rated current	6.3 A
Rated cross-section	4 mm²
Rated impulse voltage	6 kV
Overvoltage category	III
Contamination degree	3
Maximum power dissipation for nominal condition	0.2 W

Connection data

Connection principle	Push-in connection
Connection position	Top
Connections	2 / extraction lever
Number of terminals per level	2
Number of levels	1
Wire cross-section single-core (rigid) / stranded, min.	0.2 mm²
Wire cross-section single core (rigid)/stranded, max.	4 mm²
Wire cross-section stranded, min.	0.2 mm²
Wire cross-section stranded, max.	2.5 mm²
Wire cross-section stranded with wire-end ferrules, min.	0.2 mm²
Wire cross-section stranded with wire-end ferrules, max.	2.5 mm²
Wire cross-section AWG, min.	24
Wire cross-section AWG, max.	10
Stripping length	12 mm

Materials

Insulation housing	Polyamide 6.6
Flammability class UL 94	V-0
Working temperature, min.	-40 °C
Working temperature, max.	120 °C

Data sheet

3290.4 FSIK 4/2A BK

Technical data

Further technical data

Mounting type	Mounting rail TS 35/7,5
Fuse size	5 x 20 mm
Gauge plug acc. to EN 60 947-1	A3
Number of cross-connection channels	1
End plate required	✓
Voltage fuse	250 V
Power loss in singular arrangement - overload and short-circuit protection, max.	4 /6,3 W / A
Power loss in compound arrangement - overload and short-circuit protection, max.	1,6 / 6,3 W / A
Power loss in singular arrangement - only short-circuit protection, max.	4 /10 W / A
Power loss in compound arrangement - only short-circuit protection, max.	4 / 6,3 W / A
Version of fuse holder	Swivelling
Version of fuse cartridge	G fuse 5 x 20

Environmental Product Compliance

REACH Conform	yes
REACH Reference date	2022-06-10
REACH Candidate Substance Note	No
RoHS Conform	yes

Approvals

CSA approval

CSA approval	C22.2 No 158
CSA approval granted	yes
CSA Usegroup C: rated voltage	300 V
CSA Usegroup C: rated current	6,3 A
CSA wire cross-section AWG, min.	24
CSA wire cross-section AWG, max.	10
CSA stripping length	12 mm

CSAus approval

CSAus approval	UL 1059
CSAus approval granted	yes
CSAus Usegroup C: rated voltage	300 V
CSAus Usegroup C: rated current	6,3 A
CSAus wire cross-section AWG, min.	24
CSAus wire cross-section AWG, max.	10
CSAus stripping length	12 mm

Approvals

KEMA KEUR approval

KEMA KEUR approval	EN 60947-7-3:2009
KEMA KEUR approval granted	yes
KEMA rated voltage	400 V
KEMA voltage fuse, max.	250 V
KEMA rated current	6,3 A
KEMA rated impulse voltage (fuse holder withoutelectrical components)	6 (4) kV
KEMA wire cross-section single core (rigid), min.	0.2 mm²
KEMA wire cross-section single-core (rigid), max.	4 mm²
KEMA wire cross-section stranded, min.	0.2 mm²
KEMA wire cross-section stranded, max.	4 mm²
KEMA fuse size	5 x 20 mm
KEMA power loss in singular arrangement - overloadand short-circuit protection, max.	4 /6,3 W / A
KEMA power loss in compound arrangement -overload and short-circuit protection, max.	1,6 / 6,3 W / A
KEMA power loss in singular arrangement - only short-circuit protection, max.	4 / 10 W / A
KEMA power loss in compound arrangement - onlyshort-circuit protection, max.	4 / 6,3 W / A

UL Recognized

UL approval	UL 1059
UL Usegroup B: rated voltage	300 V
UL Usegroup B: rated current	6,3 A
UL Usegroup C: rated voltage	300 V
UL Usegroup C: rated current	6,3 A
UL Usegroup D: rated voltage	300 V
UL Usegroup D: rated current	6,3 A
UL wire cross-section single-core (rigid) AWG, min.	24
UL wire cross-section single-core (rigid) AWG, max.	10
UL wire cross-section stranded AWG, min.	24
UL wire cross-section stranded AWG, max.	10
UL wire material	Cu
UL factory wiring	1
UL field wiring	1
UL Recognized	1

Media

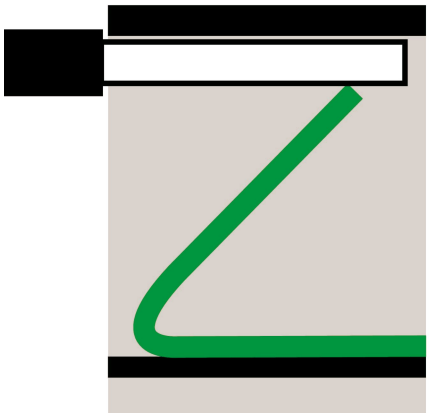

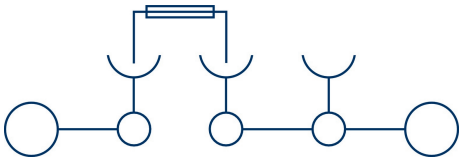

Accessories

End plate

End plate, Width: 1.5 mm, Colour: Black

Article number	Article name	GTIN (EAN)	Packaging unit
3489.4	FAPSI 4/2A BK	4044211184681	20

Wire-end ferrule for compact connection spaces

Wire-end ferrules, Max. wire cross-section: 4 mm², Length: 20 mm, Length of copper pipe: 12 mm, Colour: Grey

Article number	Article name	GTIN (EAN)	Packaging unit
3194.0	H 4,0/20-D SR GR	4044211134280	500 ST

End stop

End stop, Mounting type: Mounting rail TS 35/7.5 and TS 35/15, Width: 5 mm, Colour: Beige

Article number	Article name	GTIN (EAN)	Packaging unit
3811.2	ZES 35/2 BG	4044211080600	50

Insulated cross-connector

Insulated cross-connector, No. of poles: 4, Mounting type: Plug in, Width: 24.3 mm, Colour: Yellow

Article number	Article name	GTIN (EAN)	Packaging unit
3474.8	FQI 4/4 YE	4044211110840	20

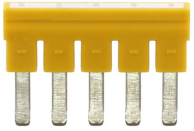

Insulated cross-connector, No. of poles: 5, Mounting type: Plug in, Width: 30.1 mm, Colour: Yellow

Article number	Article name	GTIN (EAN)	Packaging unit
3475.8	FQI 4/5 YE	4044211110857	20

Insulated cross-connector

Insulated cross-connector, No. of poles: 6, Mounting type: Plug in, Width: 36.5 mm, Colour: Yellow

Article number	Article name	GTIN (EAN)	Packaging unit
3476.8	FQI 4/6 YE	4044211110864	20

Insulated cross-connector, No. of poles: 10, Mounting type: Plug in, Width: 60.9 mm, Colour: Yellow

Article number	Article name	GTIN (EAN)	Packaging unit
3470.8	FQI 4/10 YE	4044211110819	10

Insulated cross-connector, No. of poles: 3, Mounting type: Plug in, Width: 18.2 mm, Colour: Yellow

Article number	Article name	GTIN (EAN)	Packaging unit
3473.8	FQI 4/3 YE	4044211110833	50

Insulated cross-connector, No. of poles: 2, Mounting type: Plug in, Width: 12.1 mm, Colour: Yellow

Article number	Article name	GTIN (EAN)	Packaging unit
3472.8	FQI 4/2 YE	4044211110826	50

Insulated cross-connector, No. of poles: 7, Mounting type: Plug in, Width: 42.6 mm, Colour: Yellow

Article number	Article name	GTIN (EAN)	Packaging unit
3477.8	FQI 4/7 YE	4044211110871	20

Insulated cross-connector, No. of poles: 9, Mounting type: Plug in, Width: 54.8 mm, Colour: Yellow

Article number	Article name	GTIN (EAN)	Packaging unit
3479.8	FQI 4/9 YE	4044211110895	10

Data sheet

3290.4 FSIK 4/2A BK

Insulated cross-connector

Insulated cross-connector, No. of poles: 8, Mounting type: Plug in, Width: 48.7 mm, Colour: Yellow

Article number	Article name	GTIN (EAN)	Packaging unit
3478.8	FQI 4/8 YE	4044211110888	10

Quick marking

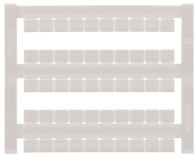

Terminal marker / Pocket Maxicard, Length: 5 mm, Width: 6 mm, Colour: White

Article number	Article name	GTIN (EAN)	Packaging unit
4702.7	PMC SB 6/50 WH	4044211089986	500 ST

Screwdriver

Screwdriver with bare blade, Colour:

Article number	Article name	GTIN (EAN)	Packaging unit
3164.0	SDB 0,4x2,0	4044211107246	1 ST

Connecting sleeve

Connecting sleeve, Colour: Orange

Article number	Article name	GTIN (EAN)	Packaging unit
2873.3	VBS 2/10 OG	4044211055981	20 ST

Connecting sleeve, Colour: Orange

Article number	Article name	GTIN (EAN)	Packaging unit
2874.3	VBS 3/10 OG	4044211055998	20 ST