# Data sheet

## 3227.2 FRKD 2,5/SV BG

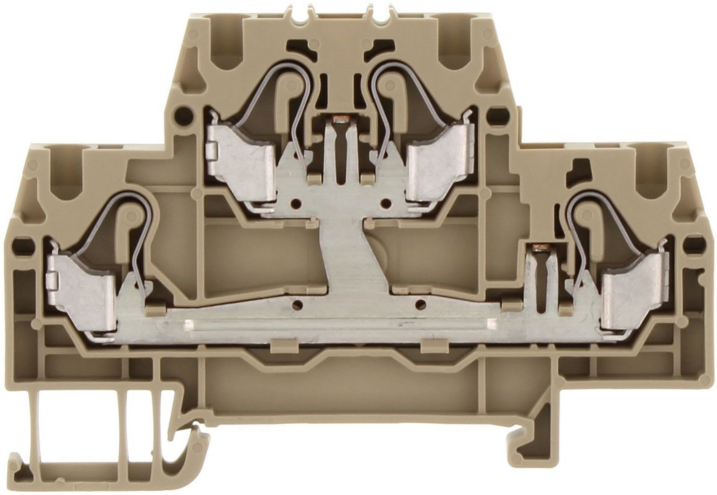

Double-level terminal, Push-in connection, Mounting type: Mounting rail TS 35/7.5, Rated cross-section: 2.5 mm², Width: 5.1 mm, Colour: Beige

## Business data

| | |
|---|---|
| Article number | 3227.2 |
| Article name | FRKD 2,5/SV BG |
| GTIN (EAN) | 4044211130060 |
| Packaging unit | 100 |
| Quantity unit | PC |
| Weight per piece (not including packaging) | 14 g |
| Weight per piece (including packaging) | 14.97 g |
| Unit of weight | G |
| Customs number | 85369010 |
| Country of origin | BG |
| Prio-Article | 3227.2 |
| Product description | Double-level terminal |

# Data sheet

## 3227.2 FRKD 2,5/SV BG

## Technical data

| | |
|---|---|
| **Dimensions** | |
| Length | 75.4 mm |
| Width | 5.1 mm |
| Height TS 35/7.5 | 53 mm |
| Height TS 35 / 7.5 with BA | 66 mm |
| **Ratings** | |
| Rated voltage | 500 V |
| Rated current | 24 A |
| Rated cross-section | 2.5 mm² |
| Rated impulse voltage | 6 kV |
| Overvoltage category | III |
| Contamination degree | 3 |
| Maximum power dissipation for nominal condition | 1.54 W |
| **Connection data** | |
| Connection principle | Push-in connection |
| Connection position | Top |
| Connections | 4 |
| Number of terminals per level | 2 |
| Number of levels | 2 |
| Levels internally bridged | ✓ |
| Wire cross-section single-core (rigid) / stranded, min. | 0.2 mm² |
| Wire cross-section single core (rigid)/stranded, max. | 4 mm² |
| Wire cross-section stranded, min. | 0.2 mm² |
| Wire cross-section stranded, max. | 4 mm² |
| Wire cross-section stranded with wire-end ferrules, min. | 0.2 mm² |
| Wire cross-section stranded with wire-end ferrules, max. | 2.5 mm² |
| Wire cross-section AWG, min. | 26 |
| Wire cross-section AWG, max. | 14 |
| Stripping length | 12 mm |

# Data sheet

## 3227.2 FRKD 2,5/SV BG

## Technical data

### Materials

| | |
|---|---|
| Insulation housing | Polyamide 6.6 |
| Flammability class UL 94 | V-0 |
| Working temperature, min. | -40 °C |
| Working temperature, max. | 120 °C |

### Further technical data

| | |
|---|---|
| Mounting type | Mounting rail TS 35/7,5 |
| Gauge plug acc. to EN 60 947-1 | A3 |
| Number of cross-connection channels | 2 |
| End plate required | ✓ |

### Environmental Product Compliance

| | |
|---|---|
| REACH Conform | yes |
| REACH Reference date | 2022-06-10 |
| REACH Candidate Substance Note | No |
| RoHS Conform | yes |

## Approvals

| Standards and regulations | |
|---|---|
| EAC approval | TR ZU 004/2011 |
| EAC approval granted | yes |

| CSA approval | |
|---|---|
| CSA approval | C22.2 No 158 |
| CSA approval granted | yes |
| CSA Usegroup B: rated voltage | 300 V |
| CSA Usegroup B: rated current | 20 A |
| CSA Usegroup C: rated voltage | 300 V |
| CSA Usegroup C: rated current | 20 A |
| CSA Usegroup D: rated voltage | 600 V |
| CSA Usegroup D: rated current | 5 A |
| CSA wire cross-section AWG, min. | 26 |
| CSA wire cross-section AWG, max. | 12 |

| CSAus approval | |
|---|---|
| CSAus approval | UL 1059 |
| CSAus approval granted | yes |
| CSAus Usegroup B: rated voltage | 300 V |
| CSAus Usegroup B: rated current | 20 A |
| CSAus Usegroup C: rated voltage | 300 V |
| CSAus Usegroup C: rated current | 20 A |
| CSAus Usegroup D: rated voltage | 600 V |
| CSAus Usegroup D: rated current | 5 A |
| CSAus wire cross-section AWG, min. | 26 |
| CSAus wire cross-section AWG, max. | 12 |

## Approvals

| KEMA KEUR approval | |
|---|---|
| KEMA KEUR approval | EN 60947-7-1:2009 |
| KEMA KEUR approval granted | yes |
| KEMA rated voltage | 500 V |
| KEMA rated current | 24 A |
| KEMA rated current (diode) | 24 A |
| KEMA rated impulse voltage | 6 kV |
| KEMA wire cross-section single core (rigid), min. | 0.2 mm² |
| KEMA wire cross-section single-core (rigid), max. | 4 mm² |
| KEMA wire cross-section stranded, min. | 0.2 mm² |
| KEMA wire cross-section stranded, max. | 4 mm² |
| KEMA wire cross-section stranded with wire-end ferrules, min. | 0.2 mm² |
| KEMA wire cross-section stranded with wire-end ferrules, max. | 2.5 mm² |

### Media

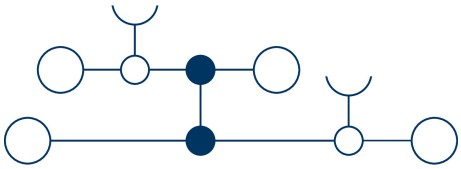

## Accessories

### End plate

End plate, Width: 1.5 mm, Colour: Beige

| Article number | Article name | GTIN (EAN) | Packaging unit |
|---|---|---|---|
| 3423.2 | FAPD 2,5 BG | 4044211130169 | 20 |

### Identification adapter

Label holder, Pitch size: 5.1 mm, Colour: beige

| Article number | Article name | GTIN (EAN) | Packaging unit |
|---|---|---|---|
| 3424.2 | FBA 1 BG | 4044211130176 | 50 ST |

### End stop

End stop, Mounting type: Mounting rail TS 35/7.5 and TS 35/15, Width: 5 mm, Colour: Beige

| Article number | Article name | GTIN (EAN) | Packaging unit |
|---|---|---|---|
| 3811.2 | ZES 35/2 BG | 4044211080600 | 50 |

### Insulated cross-connector

Insulated cross-connector, No. of poles: 8, Mounting type: Plug in, Width: 40.7 mm, Colour: Yellow

| Article number | Article name | GTIN (EAN) | Packaging unit |
|---|---|---|---|
| 3468.8 | FQI 2,5/8 YE | 4044211110796 | 10 |

Insulated cross-connector, No. of poles: 9, Mounting type: Plug in, Width: 45.8 mm, Colour: Yellow

| Article number | Article name | GTIN (EAN) | Packaging unit |
|---|---|---|---|
| 3469.8 | FQI 2,5/9 YE | 4044211110802 | 10 |

### Insulated cross-connector

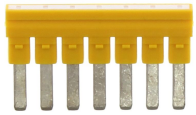

Insulated cross-connector, No. of poles: 7, Mounting type: Plug in, Width: 35.6 mm, Colour: Yellow

| Article number | Article name | GTIN (EAN) | Packaging unit |
|---|---|---|---|
| 3467.8 | FQI 2,5/7 YE | 4044211110789 | 20 |

Insulated cross-connector, No. of poles: 4, Mounting type: Plug in, Width: 20.3 mm, Colour: Yellow

| Article number | Article name | GTIN (EAN) | Packaging unit |
|---|---|---|---|
| 3464.8 | FQI 2,5/4 YE | 4044211110758 | 20 |

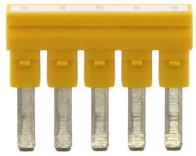

Insulated cross-connector, No. of poles: 5, Mounting type: Plug in, Width: 25.4 mm, Colour: Yellow

| Article number | Article name | GTIN (EAN) | Packaging unit |
|---|---|---|---|
| 3465.8 | FQI 2,5/5 YE | 4044211110765 | 20 |

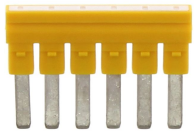

Insulated cross-connector, No. of poles: 6, Mounting type: Plug in, Width: 30.5 mm, Colour: Yellow

| Article number | Article name | GTIN (EAN) | Packaging unit |
|---|---|---|---|
| 3466.8 | FQI 2,5/6 YE | 4044211110772 | 20 |

Insulated cross-connector, No. of poles: 10, Mounting type: Plug in, Width: 50.9 mm, Colour: Yellow

| Article number | Article name | GTIN (EAN) | Packaging unit |
|---|---|---|---|
| 3460.8 | FQI 2,5/10 YE | 4044211110727 | 10 |

Insulated cross-connector, No. of poles: 3, Mounting type: Plug in, Width: 15.2 mm, Colour: Yellow

| Article number | Article name | GTIN (EAN) | Packaging unit |
|---|---|---|---|
| 3463.8 | FQI 2,5/3 YE | 4044211110741 | 50 |

# Data sheet

## 3227.2 FRKD 2,5/SV BG

### Insulated cross-connector

Insulated cross-connector, No. of poles: 2, Mounting type: Plug in, Width: 10.1 mm, Colour: Yellow

| Article number | Article name | GTIN (EAN) | Packaging unit |
|---|---|---|---|
| 3462.8 | FQI 2,5/2 YE | 4044211110734 | 50 |

### Quick marking

Terminal marker / Pocket Maxicard, Length: 5 mm, Width: 5 mm, Colour: White

| Article number | Article name | GTIN (EAN) | Packaging unit |
|---|---|---|---|
| 4600.7 | PMC SB 5/50 WH | 4044211088903 | 500 ST |

### Screwdriver

Screwdriver with bare blade, Colour:

| Article number | Article name | GTIN (EAN) | Packaging unit |
|---|---|---|---|
| 3164.0 | SDB 0,4x2,0 | 4044211107246 | 1 ST |

### Four-way cover

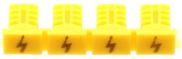

Cover, Length: 3.4 mm, Width: 19.8 mm, Colour: Yellow

| Article number | Article name | GTIN (EAN) | Packaging unit |
|---|---|---|---|
| 3426.8 | FAD 2,5/4/B YE | 4044211132934 | 20 ST |