Data sheet

1135.2 PTK 10/DU/STB BG

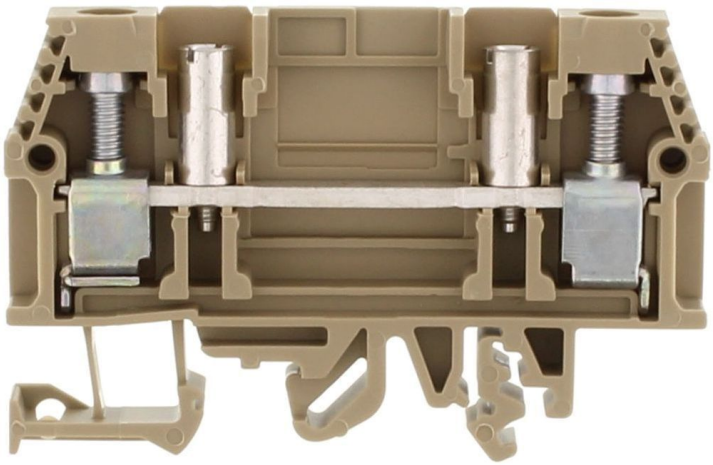

Test disconnect terminal, Screw connection, Mounting type:Mounting rail TS 35/7.5 and TS 32, Rated cross-section: 10 mm², Width: 8 mm, Colour: Beige

Business data

Article number	1135.2
Article name	PTK 10/DU/STB BG
GTIN (EAN)	4044211020408
Packaging unit	50
Quantity unit	PC
Weight per piece (not including packaging)	21 g
Weight per piece (including packaging)	22.56 g
Unit of weight	G
Customs number	85369010
Country of origin	DE
Product description	Test disconnect terminal
Colour	Beige

Data sheet

1135.2 PTK 10/DU/STB BG

Technical data

Dimensions

Length	72 mm
Width	8 mm
Height	45.5 mm
Height TS 35/7.5	47 mm
Height TS 32	51.5 mm

Ratings

Rated voltage	400 V
Rated current	10 A
Rated cross-section	10 mm²
Rated impulse voltage	4 kV
Overvoltage category	III
Contamination degree	3
Maximum power dissipation for nominal condition	0.32 W

Connection data

Connection principle	Screw connection
Connection position	Lateral
Connections	2
Number of terminals per level	2
Number of levels	1
Wire cross-section single-core (rigid) / stranded, min.	0.2 mm²
Wire cross-section single core (rigid)/stranded, max.	10 mm²
Wire cross-section stranded, min.	0.2 mm²
Wire cross-section stranded, max.	10 mm²
Wire cross-section stranded with wire-end ferrules, min.	0.2 mm²
Wire cross-section stranded with wire-end ferrules, max.	10 mm²
Wire cross-section AWG, min.	8
Wire cross-section AWG, max.	22
Stripping length	12 mm
Screw head	Slotted
Screw threading	M 4
Tightening torque, min.	1.2 Nm
Tightening torque, max.	2 Nm

Data sheet

1135.2 PTK 10/DU/STB BG

Technical data

Materials

Insulation housing	Polyamide 6.6
Flammability class UL 94	V-2
Working temperature, min.	-40 °C
Working temperature, max.	105 °C

Further technical data

Mounting type	Mounting rail TS 35/7.5 and TS 32
Gauge plug acc. to EN 60 947-1	A5
End plate required	✓
Number of test pick-off options	2
Built-in test socket available	✓
Test sockets	2 x 0,4 mm Ø

Environmental Product Compliance

REACH Conform	No
REACH Reference date	2022-06-10
REACH Candidate Substance Note	No
REACH CAS 1 Substance	LEAD
REACH CAS 1 Percent minimal	0.1 %
REACH CAS 1 Percent maximum	4 %
REACH CAS 1 Number	7439-92-1
RoHS Conform	yes
RoHS Exception rule	6c

Approvals

CSA approval

CSA approval	C22.2 No 158
CSA approval granted	yes
CSA Usegroup C: rated voltage	600 V
CSA Usegroup C: rated current	45 A
CSA wire cross-section AWG, min.	22
CSA wire cross-section AWG, max.	8
CSA stripping length	12 mm
CSA torque, max.	2 Nm
CSA torque, min.	1.2 Nm

CSAus approval

CSAus approval	UL 1059
CSAus approval granted	yes
CSAus Usegroup C: rated voltage	600 V
CSAus Usegroup C: rated current	45 A
CSAus wire cross-section AWG, min.	22
CSAus wire cross-section AWG, max.	8
CSAus stripping length	12 mm
CSAus torque, min.	1.2 Nm
CSAus torque, max.	2 Nm

Media

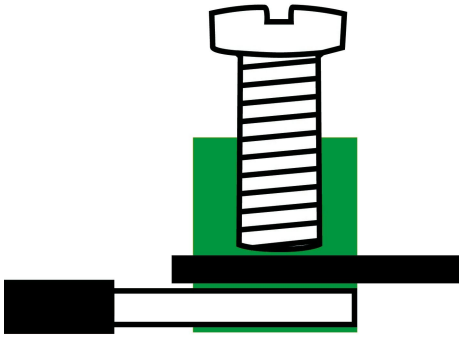

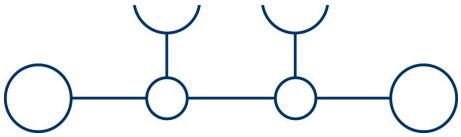

Accessories

End plate

End plate, Width: 1.5 mm, Colour: Beige

Article number	Article name	GTIN (EAN)	Packaging unit
2782.2	AP L/Q/D BG	4044211055110	20 ST

End stop

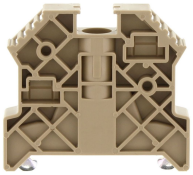

End stop, Mounting type: Mounting rail TS 35/7.5, Width: 9.5 mm, Colour: Beige

Article number	Article name	GTIN (EAN)	Packaging unit
2828.0	ES 35/K/ST BG	4044211055547	50

Short-circuit plug

Short-circuit plug, Colour: Black

Article number	Article name	GTIN (EAN)	Packaging unit
2886.0	KSS 2-8	4044211056117	10 ST

Test plug

Test plug, Colour: Red

Article number	Article name	GTIN (EAN)	Packaging unit
2051.0	PS 4	4044211048570	20 ST

Quick marking

Terminal marker / Pocket Maxicard, Length: 5 mm, Width: 8 mm, Colour: White

Article number	Article name	GTIN (EAN)	Packaging unit
9323.7	PMC SB 8/40 WH	4044211129231	400 ST

Screwdriver

Screwdriver with bare blade, Colour: Black-grey

Article number	Article name	GTIN (EAN)	Packaging unit
1087.0	SDB 0,8x4,0	4044211014803	1 ST

Insulation plate

Insulation plate, Colour: Beige

Article number	Article name	GTIN (EAN)	Packaging unit
2003.2	TRS 1 BG	4044211048068	100

Cross-switch bridge

Cross-switch bridge, No. of poles: 2, Mounting type: Can be screwed on, Width: 15.4 mm, Colour: Orange

Article number	Article name	GTIN (EAN)	Packaging unit
2197.0	QVS 2	4044211050252	20 ST

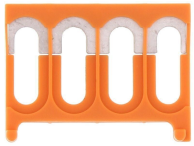

Cross-switch bridge, No. of poles: 4, Mounting type: Can be screwed on, Width: 31.6 mm, Colour: Orange

Article number	Article name	GTIN (EAN)	Packaging unit
2199.0	QVS 4	4044211050276	20 ST

Cross-switch bridge

Cross-switch bridge, No. of poles: 3, Mounting type: Can be screwed on, Width: 23.5 mm, Colour: Orange

Article number	Article name	GTIN (EAN)	Packaging unit
2198.0	QVS 3	4044211050269	20 ST

Insulated cross-connector

Insulated cross-connector, No. of poles: 10, Mounting type: Can be screwed on, Width: 78.4 mm, Colour: Yellow

Article number	Article name	GTIN (EAN)	Packaging unit
2753.2	QI 10 YE	4044211054892	10 ST

Insulated cross-connector, No. of poles: 4, Mounting type: Can be screwed on, Width: 28.8 mm, Colour: Yellow

Article number	Article name	GTIN (EAN)	Packaging unit
2752.2	QI 4 YE	4044211054885	20 ST

Insulated cross-connector, No. of poles: 2, Mounting type: Can be screwed on, Width: 13.6 mm, Colour: Yellow

Article number	Article name	GTIN (EAN)	Packaging unit
2750.2	QI 2 YE	4044211054861	50 ST

Insulated cross-connector, No. of poles: 3, Mounting type: Can be screwed on, Width: 21.7 mm, Colour: Yellow

Article number	Article name	GTIN (EAN)	Packaging unit
2751.2	QI 3 YE	4044211054878	50 ST