Data sheet

3609.5 ZTRK 2,5/2A/OT BU

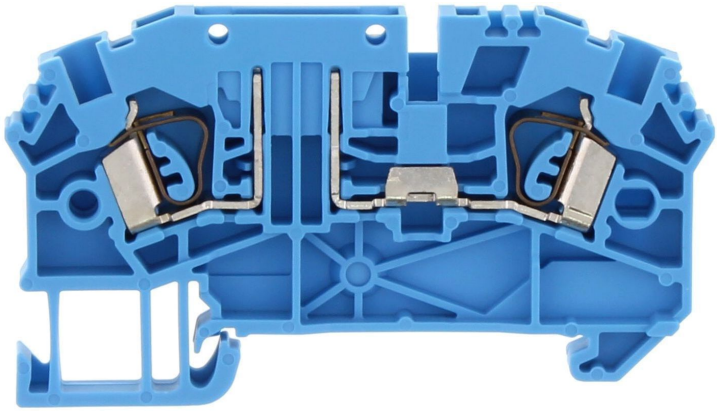

Basic terminal, Tension-spring connection, Mounting type: Mounting rail TS 35/7.5, Rated cross-section: 2.5 mm², Width: 5.1 mm, Colour: Blue

RAL: Ähnlich 5005

Business data

Article number	3609.5
Article name	ZTRK 2,5/2A/OT BU
GTIN (EAN)	4044211081638
Packaging unit	100
Quantity unit	PC
Weight per piece (not including packaging)	8.2 g
Weight per piece (including packaging)	8.82 g
Unit of weight	G
Customs number	85369010
Country of origin	CZ
Prio-Article	3609.2
Product description	Basic terminal

Data sheet

3609.5 ZTRK 2,5/2A/OT BU

Technical data

Dimensions

Length	68 mm
Width	5.1 mm
Height TS 35/7.5	39.2 mm

Ratings

Rated voltage	400 V
Rated current	18 A
Rated cross-section	2.5 mm²
Rated impulse voltage	6 kV
Overvoltage category	III
Contamination degree	3
Maximum power dissipation for nominal condition	0.58 W

Connection data

Connection principle	Tension-spring connection
Connection position	Diagonal
Connections	2
Number of terminals per level	2
Number of levels	1
Wire cross-section single-core (rigid) / stranded, min.	0.5 mm²
Wire cross-section single core (rigid)/stranded, max.	4 mm²
Wire cross-section stranded, min.	0.5 mm²
Wire cross-section stranded, max.	4 mm²
Wire cross-section stranded with wire-end ferrules, min.	0.5 mm²
Wire cross-section stranded with wire-end ferrules, max.	2.5 mm²
Wire cross-section AWG, min.	20
Wire cross-section AWG, max.	12
Stripping length	10 mm

Materials

Insulation housing	Polyamide 6.6
Flammability class UL 94	V-0
Working temperature, min.	-40 °C
Working temperature, max.	120 °C

Technical data

Further technical data

Mounting type	Mounting rail TS 35/7,5
Gauge plug acc. to EN 60 947-1	A3
Number of cross-connection channels	1
End plate required	✓
Number of test pick-off options	2

Environmental Product Compliance

REACH Conform	yes
REACH Reference date	2022-06-10
REACH Candidate Substance Note	No
RoHS Conform	yes

Approvals

CSA approval

CSA approval	C22.2 No 158
CSA approval granted	yes
CSA Usegroup B: rated current (fuse)	15 (20) A
CSA Usegroup C: rated voltage (fuse)	300 (24) V
CSA Usegroup B: rated voltage (fuse)	300 (24) V
CSA Usegroup C: rated current (fuse)	15 (20) A
CSA wire cross-section AWG, min.	20
CSA wire cross-section AWG, max.	12
CSA stripping length	10 mm

CSAus approval

CSAus approval	UL 1059
CSAus approval granted	yes
CSAus Usegroup B: rated voltage (fuse)	300 (24) V
CSAus Usegroup B: rated current (fuse)	15 (20) A
CSAus Usegroup C: rated voltage (fuse)	300 (24) V
CSAus Usegroup C: rated current (fuse)	15 (20) A
CSAus wire cross-section AWG, min.	20
CSAus wire cross-section AWG, max.	12
CSAus stripping length	10 mm

KEMA KEUR approval

KEMA KEUR approval	EN 60947-7-1:2009, EN 60947-7-3:2009
KEMA KEUR approval granted	yes
KEMA rated voltage (fuse)	400 (32) V
KEMA rated current (diode)	12 A
KEMA rated impulse voltage (fuse holder without electrical components)	6 (4) kV
KEMA wire cross-section single core (rigid), min.	0.5 mm²
KEMA wire cross-section single-core (rigid), max.	4 mm²
KEMA wire cross-section stranded, min.	0.5 mm²
KEMA wire cross-section stranded, max.	4 mm²

Media

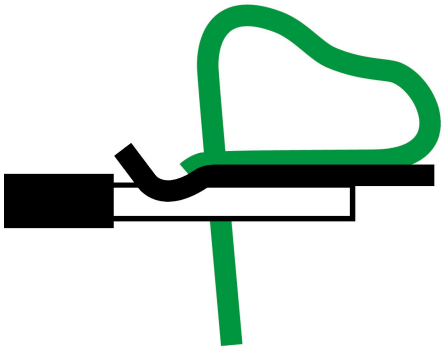

Accessories

End plate

End plate, Width: 1.5 mm, Colour: Beige

Article number	Article name	GTIN (EAN)	Packaging unit
3796.2	ZAPT 2,5/2A BG	4044211061302	20

Actuating tool

Actuating tool, No. of poles: 1, Colour: Black

Article number	Article name	GTIN (EAN)	Packaging unit
3808.0	BWMA 1 (0,5 x 3,5 mm)	4044211078850	1 ST

End stop

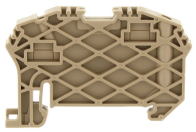

End stop, Mounting type: Mounting rail TS 35/7.5 and TS 35/15, Width: 6 mm, Colour: Beige

Article number	Article name	GTIN (EAN)	Packaging unit
3748.2	ZES 35 BG	4044211060572	50

Test adapter

Test adapter, Pitch size: 5.1 mm, Colour: Beige

Article number	Article name	GTIN (EAN)	Packaging unit
3740.2	ZTA 2,5 BG	4044211060497	10 ST

Insulated cross-connector

Insulated cross-connector, No. of poles: 7, Mounting type: Plug in, Width: 34.6 mm,Rated cross-section: 2.5 mm², Colour: Yellow

Article number	Article name	GTIN (EAN)	Packaging unit
3715.8	ZQI 2,5/7 YE	4044211060336	20

Insulated cross-connector, No. of poles: 2, Mounting type: Plug in, Width: 9.1 mm, Rated cross-section: 2.5 mm², Colour: Yellow

Article number	Article name	GTIN (EAN)	Packaging unit
3710.8	ZQI 2,5/2 YE	4044211060282	50

Insulated cross-connector, No. of poles: 10, Mounting type: Plug in, Width: 49.9 mm, Rated cross-section: 2.5 mm², Colour: Yellow

Article number	Article name	GTIN (EAN)	Packaging unit
3718.8	ZQI 2,5/10 YE	4044211060367	10

Insulated cross-connector, No. of poles: 3, Mounting type: Plug in, Width: 14.2 mm, Rated cross-section: 2.5 mm², Colour: Yellow

Article number	Article name	GTIN (EAN)	Packaging unit
3711.8	ZQI 2,5/3 YE	4044211060299	50

Insulated cross-connector, No. of poles: 5, Mounting type: Plug in, Width: 24.4 mm, Rated cross-section: 2.5 mm², Colour: Yellow

Article number	Article name	GTIN (EAN)	Packaging unit
3713.8	ZQI 2,5/5 YE	4044211060312	20

Insulated cross-connector, No. of poles: 8, Mounting type: Plug in, Width: 39.7 mm, Rated cross-section: 2.5 mm², Colour: Yellow

Article number	Article name	GTIN (EAN)	Packaging unit
3716.8	ZQI 2,5/8 YE	4044211060343	10

Insulated cross-connector, No. of poles: 4, Mounting type: Plug in, Width: 19.3 mm, Rated cross-section: 2.5 mm², Colour: Yellow

Article number	Article name	GTIN (EAN)	Packaging unit
3712.8	ZQI 2,5/4 YE	4044211060305	20

Insulated cross-connector, No. of poles: 6, Mounting type: Plug in, Width: 29.5 mm, Rated cross-section: 2.5 mm², Colour: Yellow

Article number	Article name	GTIN (EAN)	Packaging unit
3714.8	ZQI 2,5/6 YE	4044211060329	20

Insulated cross-connector, No. of poles: 99, Mounting type: Plug in, Width: 500 mm, Rated cross-section: 2.5 mm², Colour: Yellow

Article number	Article name	GTIN (EAN)	Packaging unit
3719.8	ZQI 2,5/0,5 m/99 Pole YE	4044211060374	2

Quick marking

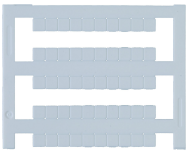

Terminal marker / Pocket Maxicard, Length: 5 mm, Width: 5 mm, Colour: White

Article number	Article name	GTIN (EAN)	Packaging unit
4600.7	PMC SB 5/50 WH	4044211088903	500 ST

Four-way cover

Cover, Length: 6.7 mm, Width: 20.4 mm, Colour: Yellow

Article number	Article name	GTIN (EAN)	Packaging unit
3706.0	ZAD 2,5/4/B YE	4044211060244	20 ST

Disconnect plug

Disconnect plug with wire bridge , Colour: Yellow

Article number	Article name	GTIN (EAN)	Packaging unit
3612.2	ZDS 1/ZTR	4044211059767	20 ST

Disconnect plug with diode 1N4007 , Colour: Yellow

Article number	Article name	GTIN (EAN)	Packaging unit
3613.2	ZDS 2/ZTR	4044211059774	20 ST

Disconnect plug

Disconnect plug with diode 1N4007 , Colour: Yellow

Article number	Article name	GTIN (EAN)	Packaging unit
3614.2	ZDS 3/ZTR	4044211059781	20 ST

Disconnect plug unpopulated, Colour: Yellow

Article number	Article name	GTIN (EAN)	Packaging unit
3615.2	ZDS 4/ZTR	4044211059798	20 ST

Disconnect blade, Colour: Yellow

Article number	Article name	GTIN (EAN)	Packaging unit
3842.8	TM 2,5	4044211139728	100 ST

Fuse modules

Fuse holder, Colour: Yellow

Article number	Article name	GTIN (EAN)	Packaging unit
3632.2	ZS/H2/ZTR/70	4044211059965	20 ST

Fuse holder, Colour: Yellow

Article number	Article name	GTIN (EAN)	Packaging unit
3633.2	ZS/H3/ZTR/150	4044211059972	20 ST

Fuse holder, Colour: Yellow

Article number	Article name	GTIN (EAN)	Packaging unit
3634.2	ZS/H4/ZTR/250	4044211059989	20 ST

Fuse plug, Colour: Yellow

Article number	Article name	GTIN (EAN)	Packaging unit
3635.2	ZS/H0/ZTR	4044211059996	20 ST

Fuse modules

Fuse holder, Colour: Yellow

Article number	Article name	GTIN (EAN)	Packaging unit
3631.2	ZS/H1/ZTR/36	4044211059958	20 ST

Reducing sleeves

Reducing sleeve, Width: 51 mm, Pitch size: 5.1 mm, Colour: Grey

Article number	Article name	GTIN (EAN)	Packaging unit
3751.6	ZRH 2,5/0,25-0,5 GR	4044211060602	1000 ST

Reducing sleeve, Width: 51 mm, Pitch size: 5.1 mm, Colour: White

Article number	Article name	GTIN (EAN)	Packaging unit
3750.7	ZRH 2,5/0,13-0,2 WH	4044211060596	1000 ST

Reducing sleeve, Width: 51 mm, Pitch size: 5.1 mm, Colour: Black

Article number	Article name	GTIN (EAN)	Packaging unit
3752.4	ZRH 2,5/0,75-1,0 BK	4044211060619	1000 ST