# Data sheet

## 17523.2 SPTK 6/LT/HB BG

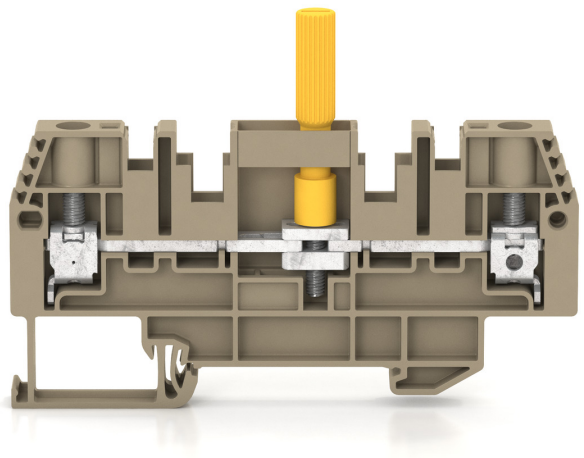

Test disconnect terminal, Screw connection, Mounting type: Mounting rail TS 35/7.5, Rated cross-section: 6 mm², Width: 8.1 mm, Colour: Beige

## Business data

| | |
|---|---|
| Article number | 17523.2 |
| Article name | SPTK 6/LT/HB BG |
| GTIN (EAN) | 4044211209223 |
| Packaging unit | 50 |
| Quantity unit | PC |
| Weight per piece (not including packaging) | 28.23 g |
| Weight per piece (including packaging) | 28.43 g |
| Unit of weight | G |
| Customs number | 85369010 |
| Country of origin | CZ |
| Product description | Test disconnect terminal |
| Colour | Beige |

# Data sheet

## 17523.2 SPTK 6/LT/HB BG

## Technical data

### Dimensions

| | |
|---|---|
| Length | 93 mm |
| Width | 8.1 mm |
| Height TS 35/7.5 | 63 mm |

### Ratings

| | |
|---|---|
| Rated voltage | 400 V |
| Rated current | 41 A |
| Rated cross-section | 6 mm² |
| Rated impulse voltage | 4 kV |
| Overvoltage category | III |
| Contamination degree | 3 |
| Maximum power dissipation for nominal condition | 1.31 W |

### Connection data

| | |
|---|---|
| Connection principle | Screw connection |
| Connection position | Lateral |
| Connections | 2 |
| Number of terminals per level | 2 |
| Number of levels | 1 |
| Wire cross-section single-core (rigid) / stranded, min. | 0.2 mm² |
| Wire cross-section single core (rigid)/stranded, max. | 10 mm² |
| Wire cross-section stranded, min. | 0.2 mm² |
| Wire cross-section stranded, max. | 10 mm² |
| Wire cross-section stranded with wire-end ferrules, min. | 0.2 mm² |
| Wire cross-section stranded with wire-end ferrules, max. | 6 mm² |
| Wire cross-section AWG, min. | 22 |
| Wire cross-section AWG, max. | 8 |
| Stripping length | 10 mm |
| Screw head | Slotted |
| Screw threading | M 3,5 |
| Tightening torque, min. | 1.2 Nm |
| Tightening torque, max. | 2 Nm |

# Data sheet

## 17523.2 SPTK 6/LT/HB BG

## Technical data

### Materials

| | |
|---|---|
| Insulation housing | Polyamide 6.6 |
| Flammability class UL 94 | V-0 |
| Working temperature, min. | -40 °C |
| Working temperature, max. | 120 °C |

### Further technical data

| | |
|---|---|
| Mounting type | Mounting rail TS 35/7,5 |
| Gauge plug acc. to EN 60 947-1 | A5 |
| Number of cross-connection channels | 4 |
| End plate required | ✓ |
| Built-in test socket available | ✓ |
| Version of lengthwise partition | Sliding |

### Environmental Product Compliance

| | |
|---|---|
| REACH Conform | yes |
| REACH Reference date | 2022-06-10 |
| REACH Candidate Substance Note | No |
| RoHS Conform | yes |

## Approvals

### cUL Recognized

| | |
|---|---|
| cUL approval | C22.2 No 158 |
| cUL Usegroup B: rated voltage | 300 V |
| cUL Usegroup B: rated current | 33 A |
| cUL Usegroup C: rated voltage | 300 V |
| cUL Usegroup C: rated current | 33 A |
| cUL Usegroup D: rated voltage | 300 V |
| cUL Usegroup D: rated current | 33 A |
| cUL wire cross-section single-core (rigid) AWG, min. | 22 |
| cUL wire cross-section single-core (rigid) AWG, max. | 10 |
| cUL wire cross-section stranded AWG, min. | 22 |
| cUL wire cross-section stranded AWG, max. | 8 |
| cUL torque, min. | 1.2 Nm |
| cUL torque, max. | 2 Nm |
| cUL wire material | Cu |
| cUL Recognized | 1 |

### KEMA KEUR approval

| | |
|---|---|
| KEMA KEUR approval | EN 60947-7-1:2009 |
| KEMA KEUR approval granted | yes |
| KEMA rated voltage | 400 V |
| KEMA rated current | 41 A |
| KEMA rated impulse voltage | 4 kV |
| KEMA wire cross-section single core (rigid), min. | 0.2 mm² |
| KEMA wire cross-section single-core (rigid), max. | 10 mm² |
| KEMA wire cross-section stranded, min. | 0.2 mm² |
| KEMA wire cross-section stranded, max. | 10 mm² |
| KEMA torque, min. | 1.2 Nm |
| KEMA torque, max. | 2 Nm |

## Approvals

| UL Recognized | |
|---|---|
| UL approval | UL 1059 |
| UL Usegroup B: rated voltage | 300 V |
| UL Usegroup B: rated current | 33 A |
| UL Usegroup C: rated voltage | 300 V |
| UL Usegroup C: rated current | 33 A |
| UL Usegroup D: rated voltage | 300 V |
| UL Usegroup D: rated current | 33 A |
| UL wire cross-section single-core (rigid) AWG, min. | 22 |
| UL wire cross-section single-core (rigid) AWG, max. | 10 |
| UL wire cross-section stranded AWG, min. | 22 |
| UL wire cross-section stranded AWG, max. | 8 |
| UL torque, min. | 10.6 Lb In. |
| UL torque, max. | 17.7 Lb In. |
| UL wire material | Cu |
| UL factory wiring | 1 |
| UL field wiring | 1 |
| UL Recognized | 1 |

## Media

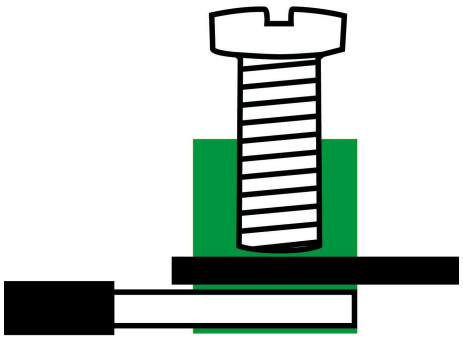

## Accessories

### End plate

End plate, Width: 1.5 mm, Colour: Beige

| Article number | Article name | GTIN (EAN) | Packaging unit |
|---|---|---|---|
| 17530.2 | SAP/L/Q/D BG | 4044211209179 | 20 ST |

### Mounting screw

Mounting screw, M 2.5, Colour: Violet

| Article number | Article name | GTIN (EAN) | Packaging unit |
|---|---|---|---|
| 2243.0 | BS 25 VT | 4044211050665 | 50 ST |

Mounting screw, M 2.5, Colour: Yellow

| Article number | Article name | GTIN (EAN) | Packaging unit |
|---|---|---|---|
| 2241.0 | BS 25 YE | 4044211050641 | 50 ST |

Mounting screw, M 2.5, Colour: Green

| Article number | Article name | GTIN (EAN) | Packaging unit |
|---|---|---|---|
| 2242.0 | BS 25 GN | 4044211050658 | 50 ST |

### End stop

End stop, Mounting type: Mounting rail TS 35/7.5 and TS 35/15, Width: 8 mm, Colour: Beige

| Article number | Article name | GTIN (EAN) | Packaging unit |
|---|---|---|---|
| 17250.2 | SES 35 BG | 4044211178253 | 50 |

### Insulation cap for cross-connector

Insulating cap, Colour: Yellow

| Article number | Article name | GTIN (EAN) | Packaging unit |
|---|---|---|---|
| 17200.8 | SQIK 2,5-10 YE | 4044211148539 | 20 |

### Cross-switch bridge

Cross-switch bridge, No. of poles: 10, Mounting type: Can be screwed on, Colour: Orange

| Article number | Article name | GTIN (EAN) | Packaging unit |
|---|---|---|---|
| 17550.3 | QVSI 10 OG | 4044211209315 | 20 ST |

Cross-switch bridge, No. of poles: 5, Mounting type: Can be screwed on, Colour: Orange

| Article number | Article name | GTIN (EAN) | Packaging unit |
|---|---|---|---|
| 17545.3 | QVSI 5 OG | 4044211209261 | 20 ST |

Cross-switch bridge, No. of poles: 7, Mounting type: Can be screwed on, Colour: Orange

| Article number | Article name | GTIN (EAN) | Packaging unit |
|---|---|---|---|
| 17547.3 | QVSI 7 OG | 4044211209285 | 20 ST |

Cross-switch bridge, No. of poles: 9, Mounting type: Can be screwed on, Colour: Orange

| Article number | Article name | GTIN (EAN) | Packaging unit |
|---|---|---|---|
| 17549.3 | QVSI 9 OG | 4044211209308 | 20 ST |

Cross-switch bridge, No. of poles: 4, Mounting type: Can be screwed on, Colour: Orange

| Article number | Article name | GTIN (EAN) | Packaging unit |
|---|---|---|---|
| 17544.3 | QVSI 4 OG | 4044211209254 | 50 ST |

Cross-switch bridge, No. of poles: 6, Mounting type: Can be screwed on, Colour: Orange

| Article number | Article name | GTIN (EAN) | Packaging unit |
|---|---|---|---|
| 17546.3 | QVSI 6 OG | 4044211209278 | 20 ST |

### Cross-switch bridge

Cross-switch bridge, No. of poles: 3, Mounting type: Can be screwed on, Colour: Orange

| Article number | Article name | GTIN (EAN) | Packaging unit |
|---|---|---|---|
| 17543.3 | QVSI 3 OG | 4044211209247 | 50 ST |

Cross-switch bridge, No. of poles: 2, Mounting type: Can be screwed on, Colour: Orange

| Article number | Article name | GTIN (EAN) | Packaging unit |
|---|---|---|---|
| 17542.3 | QVSI 2 OG | 4044211209230 | 50 ST |

Cross-switch bridge, No. of poles: 8, Mounting type: Can be screwed on, Colour: Orange

| Article number | Article name | GTIN (EAN) | Packaging unit |
|---|---|---|---|
| 17548.3 | QVSI 8 OG | 4044211209292 | 20 ST |

### Internal cross-switch bridge

Cross-switch bridge, No. of poles: 2, Mounting type: Can be screwed on, Colour: Orange

| Article number | Article name | GTIN (EAN) | Packaging unit |
|---|---|---|---|
| 17534.3 | QSBI 2 OG | 4044211209452 | 50 ST |

Cross-switch bridge, No. of poles: 3, Mounting type: Can be screwed on, Colour: Orange

| Article number | Article name | GTIN (EAN) | Packaging unit |
|---|---|---|---|
| 17535.3 | QSBI 3 OG | 4044211209469 | 50 ST |

Cross-switch bridge, No. of poles: 4, Mounting type: Can be screwed on, Colour: Orange

| Article number | Article name | GTIN (EAN) | Packaging unit |
|---|---|---|---|
| 17536.3 | QSBI 4 OG | 4044211209476 | 50 ST |

### Insulated cross-connector

Insulated cross-connector, No. of poles: 7, Mounting type: Plug in, Width: 54.8 mm,Rated cross-section: 6 mm², Colour: Yellow

| Article number | Article name | GTIN (EAN) | Packaging unit |
|---|---|---|---|
| 17226.8 | SQI 6/7 YE | 4044211148799 | 20 |

Insulated cross-connector, No. of poles: 8, Mounting type: Plug in, Width: 62.9 mm, Rated cross-section: 6 mm², Colour: Yellow

| Article number | Article name | GTIN (EAN) | Packaging unit |
|---|---|---|---|
| 17227.8 | SQI 6/8 YE | 4044211148805 | 10 |

Insulated cross-connector, No. of poles: 4, Mounting type: Plug in, Width: 30.5 mm, Rated cross-section: 6 mm², Colour: Yellow

| Article number | Article name | GTIN (EAN) | Packaging unit |
|---|---|---|---|
| 17223.8 | SQI 6/4 YE | 4044211148768 | 20 |

Insulated cross-connector, No. of poles: 9, Mounting type: Plug in, Width: 71 mm, Rated cross-section: 6 mm², Colour: Yellow

| Article number | Article name | GTIN (EAN) | Packaging unit |
|---|---|---|---|
| 17228.8 | SQI 6/9 YE | 4044211148812 | 10 |

Insulated cross-connector, No. of poles: 10, Mounting type: Plug in, Width: 79.1 mm, Rated cross-section: 6 mm², Colour: Yellow

| Article number | Article name | GTIN (EAN) | Packaging unit |
|---|---|---|---|
| 17229.8 | SQI 6/10 YE | 4044211148829 | 10 |

Insulated cross-connector, No. of poles: 2, Mounting type: Plug in, Width: 14.3 mm, Rated cross-section: 6 mm², Colour: Yellow

| Article number | Article name | GTIN (EAN) | Packaging unit |
|---|---|---|---|
| 17221.8 | SQI 6/2 YE | 4044211148744 | 50 |

Insulated cross-connector, No. of poles: 3, Mounting type: Plug in, Width: 22.4 mm, Rated cross-section: 6 mm², Colour: Yellow

| Article number | Article name | GTIN (EAN) | Packaging unit |
|---|---|---|---|
| 17222.8 | SQI 6/3 YE | 4044211148751 | 50 |

Insulated cross-connector, No. of poles: 6, Mounting type: Plug in, Width: 46.7 mm, Rated cross-section: 6 mm², Colour: Yellow

| Article number | Article name | GTIN (EAN) | Packaging unit |
|---|---|---|---|
| 17225.8 | SQI 6/6 YE | 4044211148782 | 20 |

Insulated cross-connector, No. of poles: 30, Mounting type: Plug in, Width: 240 mm, Rated cross-section: 6 mm², Colour: Yellow

| Article number | Article name | GTIN (EAN) | Packaging unit |
|---|---|---|---|
| 17230.8 | SQI 6/30 YE | 4044211148836 | 5 |

Insulated cross-connector, No. of poles: 5, Mounting type: Plug in, Width: 38.6 mm, Rated cross-section: 6 mm², Colour: Yellow

| Article number | Article name | GTIN (EAN) | Packaging unit |
|---|---|---|---|
| 17224.8 | SQI 6/5 YE | 4044211148775 | 20 |

## Quick marking

Terminal marker / Pocket Maxicard, Length: 5 mm, Width: 8 mm, Colour: White

| Article number | Article name | GTIN (EAN) | Packaging unit |
|---|---|---|---|
| 9323.7 | PMC SB 8/40 WH | 4044211129231 | 400 ST |

## Screwdriver

Screwdriver with bare blade, Colour: Black-grey

| Article number | Article name | GTIN (EAN) | Packaging unit |
|---|---|---|---|
| 1087.0 | SDB 0,8x4,0 | 4044211014803 | 1 ST |

# Data sheet

## 17523.2 SPTK 6/LT/HB BG

### Short insulated socket plug

Insulated socket, Colour: Blue

| Article number | Article name | GTIN (EAN) | Packaging unit |
|---|---|---|---|
| 17531.5 | STBI 19/4 BU | 4044211209353 | 50 |

### Insulated long socket plug

Insulated socket, Colour: Yellow

| Article number | Article name | GTIN (EAN) | Packaging unit |
|---|---|---|---|
| 17532.8 | STBI 19/4-L YE | 4044211209438 | 50 |

### Connecting sleeve

Connecting sleeve, Colour: natural

| Article number | Article name | GTIN (EAN) | Packaging unit |
|---|---|---|---|
| 2238.0 | VH 19 | 4044211050610 | 50 ST |

### Short-circuit plug

Short-circuit plug, No. of poles: 3, Mounting type: Plug in, Width: 22.4 mm, Rated cross-section: 6 mm², Colour: Yellow

| Article number | Article name | GTIN (EAN) | Packaging unit |
|---|---|---|---|
| 17553.8 | KS-SQI 6/3 YE | 4044211209483 | 50 ST |

Short-circuit plug, No. of poles: 4, Mounting type: Plug in, Width: 30.5 mm, Rated cross-section: 6 mm², Colour: Yellow

| Article number | Article name | GTIN (EAN) | Packaging unit |
|---|---|---|---|
| 17554.8 | KS-SQI 6/4 YE | 4044211209490 | 50 ST |

# Data sheet

## 17523.2 SPTK 6/LT/HB BG

### Short-circuit plug

Short-circuit plug, No. of poles: 2, Mounting type: Plug in, Width: 14.3 mm, Rated cross-section: 6 mm², Colour: Yellow

| Article number | Article name | GTIN (EAN) | Packaging unit |
|---|---|---|---|
| 17552.8 | KS-SQI 6/2 YE | 4044211209193 | 50 ST |

Short-circuit plug, No. of poles: 5, Mounting type: Plug in, Width: 38.6 mm, Rated cross-section: 6 mm², Colour: Yellow

| Article number | Article name | GTIN (EAN) | Packaging unit |
|---|---|---|---|
| 17555.8 | KS-SQI 6/5 YE | 4044211209506 | 20 ST |