RTO 5-T-TC - Test disconnect terminal block

3049990

https://www.phoenixcontact.com/us/products/3049990

Please be informed that the data shown in this PDF document is generated from our Online Catalog. Please find the complete data in the user documentation. Our General Terms of Use for Downloads are valid.

Test disconnect terminal block with bolt connection technology and transparent safety contact hood, cross section: 0.1 - 6 mm^2, AWG: 26 - 10, width 16.3 mm, color: gray

Your advantages

- Four bridge shafts per terminal block
- Terminal point always freely accessible
- Easy bridging and potential distribution using the patented plug-in bridges from the CLIPLINE complete system
- The screws are secured against loosening by captive spring-loaded spacers
- Large-surface labeling options in the terminal center and above the terminal points
- The use of the switching lock effectively prevents unintentional switching

Commercial Data

Item number	3049990
Packing unit	1 pc
Minimum order quantity	25 pc
Sales Key	BE43
Product Key	BE4333
Catalog Page	Page 382 (C-1-2019)
GTIN	4046356431408
Weight per Piece (including packing)	43.54 g
Weight per Piece (excluding packing)	37.16 g
Customs tariff number	85369010
Country of origin	CN

Technical Data

Notes

General	Note: the BE-RT... path extension is to be used for non-insulated cable lugs (see accessories).

Product properties

Product type	Bolt connection terminal block
Number of connections	2
Number of rows	1
Potentials	1

Insulation characteristics

Overvoltage category	III
Degree of pollution	3

Electrical properties

Rated surge voltage	6 kV
Maximum power dissipation for nominal condition	1.31 W

Connection data

Number of connections per level	2
Nominal cross section	6 mm²
Stripping length	The stripping length depends on the specification provided by the cable lug manufacturer.
Connection in acc. with standard	IEC 60947-7-1
Nominal current	41 A
Maximum load current	41 A (with 6 mm² conductor cross section)
Nominal voltage	500 V
Nominal cross section	6 mm²

Disconnect slide

Screw thread	M4

Cable lug connection DIN 46234:1980-03

Connection in acc. with standard	DIN 46234:1980-03
Cross section	0.5 mm² ... 6 mm²
Cross section range AWG	20 ... 10 (converted acc. to IEC)
Hole diameter	5.3 mm
Width	10 mm
Bolt diameter	5 mm
Screw thread	M5
Tightening torque	2.5 ... 3 Nm
Connection in acc. with standard	DIN 46237:1970-07
Cross section	1 mm² ... 6 mm²

Cross section range AWG	16 ... 10 (converted acc. to IEC)
Hole diameter	5.3 mm
Width	10 mm
Bolt diameter	5 mm
Screw thread	M5
Tightening torque	2.5 ... 3 Nm
Identification color of ring cable lugs : red	1 mm²
Identification color of ring cable lugs : blue	2.5 mm²
Identification color of ring cable lugs : yellow	6 mm²

Dimensions

Width	16.3 mm
End cover width	2.2 mm
Height	91.4 mm
Height NS 35/15	58.5 mm
Height NS 35/7,5	51 mm
Length	91.4 mm

Material specifications

Color	gray
Flammability rating according to UL 94	V0
Insulating material group	I
Insulating material	PA
Static insulating material application in cold	-60 °C
Temperature index of insulation material (DIN EN 60216-1 (VDE 0304-21))	130 °C
Relative insulation material temperature index (Elec., UL 746 B)	130 °C
Fire protection for rail vehicles (DIN EN 45545-2) R22	HL 1 - HL 3
Fire protection for rail vehicles (DIN EN 45545-2) R23	HL 1 - HL 3
Fire protection for rail vehicles (DIN EN 45545-2) R24	HL 1 - HL 3
Fire protection for rail vehicles (DIN EN 45545-2) R26	HL 1 - HL 3
Calorimetric heat release NFPA 130 (ASTM E 1354)	28 MJ/kg
Surface flammability NFPA 130 (ASTM E 162)	passed
Specific optical density of smoke NFPA 130 (ASTM E 662)	passed
Smoke gas toxicity NFPA 130 (SMP 800C)	passed

Electrical tests

Surge voltage test

Result	Test passed

Temperature-rise test

Requirement temperature-rise test	Increase in temperature ≤ 45 K
Result	Test passed
Short-time withstand current 6 mm²	0.72 kA

Result	Test passed

Power-frequency withstand voltage

Test voltage setpoint	2.2 kV
Result	Test passed

Mechanical properties

Mechanical data

Open side panel	Yes

Mechanical tests

Mechanical strength

Result	Test passed

Environmental and real-life conditions

Needle-flame test

Time of exposure	30 s
Result	Test passed

Oscillation/broadband noise

Specification	DIN EN 50155 (VDE 0115-200):2018-05
Spectrum	Service life test category 2, bogie-mounted
Frequency	f_1 = 5 Hz to f_2 = 250 Hz
ASD level	6.12 $(m/s^2)^2$/Hz
Acceleration	3.12g
Test duration per axis	5 h
Test directions	X-, Y- and Z-axis

Shocks

Specification	DIN EN 50155 (VDE 0115-200):2008-03
Pulse shape	Half-sine
Acceleration	30g
Shock duration	18 ms
Number of shocks per direction	3
Test directions	X-, Y- and Z-axis (pos. and neg.)

Ambient conditions

Ambient temperature (operation)	-60 °C ... 105 °C (max. short-term operating temperature RTI Elec.)
Ambient temperature (storage/transport)	-25 °C ... 60 °C (for a short time, not exceeding 24 h, -60 °C to +70 °C)
Ambient temperature (assembly)	-5 °C ... 70 °C
Ambient temperature (actuation)	-5 °C ... 70 °C
Permissible humidity (storage/transport)	30 % ... 70 %

Standards and regulations

Connection in acc. with standard	IEC 60947-7-1

Mounting

Mounting type	NS 35/7,5
	NS 35/15

Drawings

Connection diagram

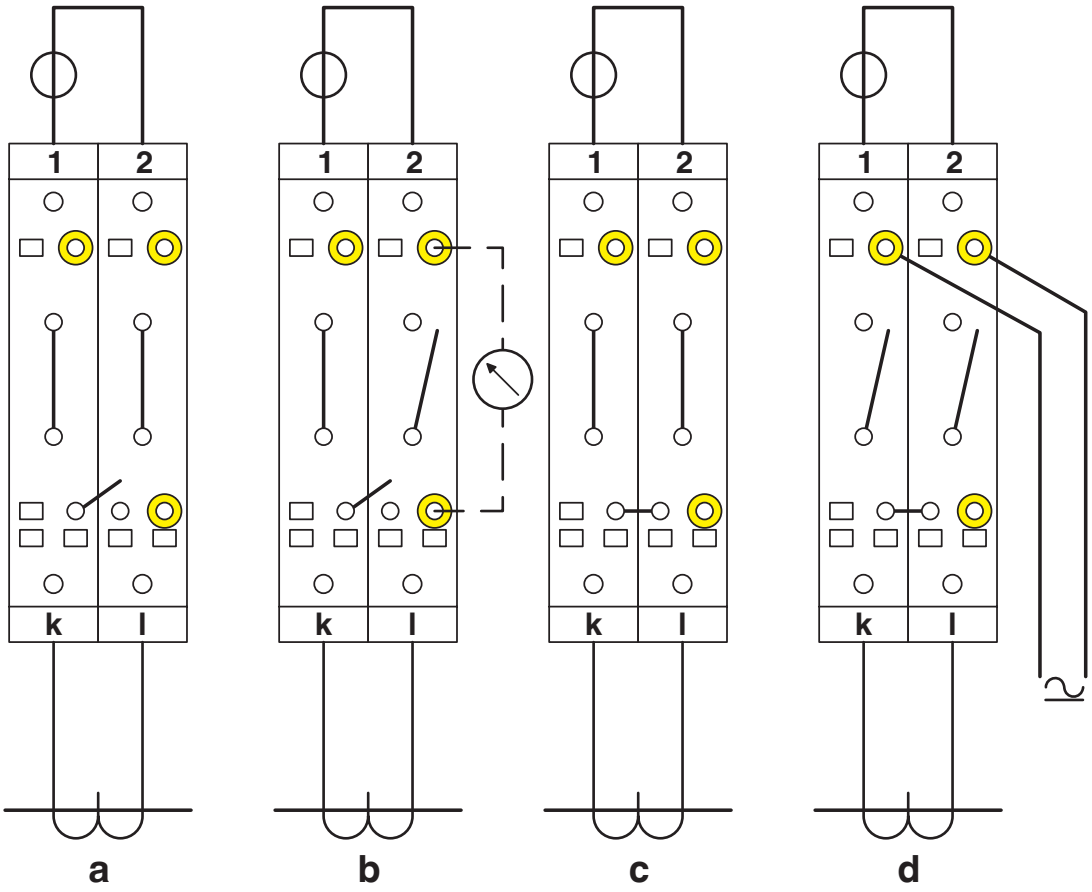

Simple current transformer test circuit
a = normal operation
b = measured value testing
c = transformer testing
d = relay testing

Connection diagram

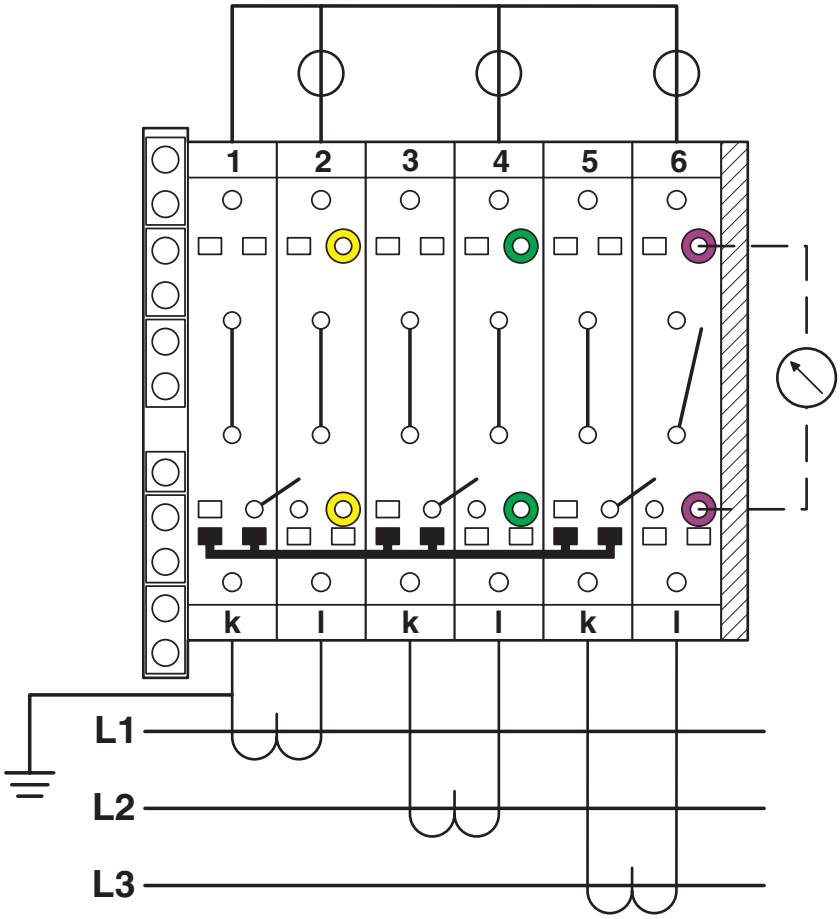

Three-phase transducer test set

Connection diagram

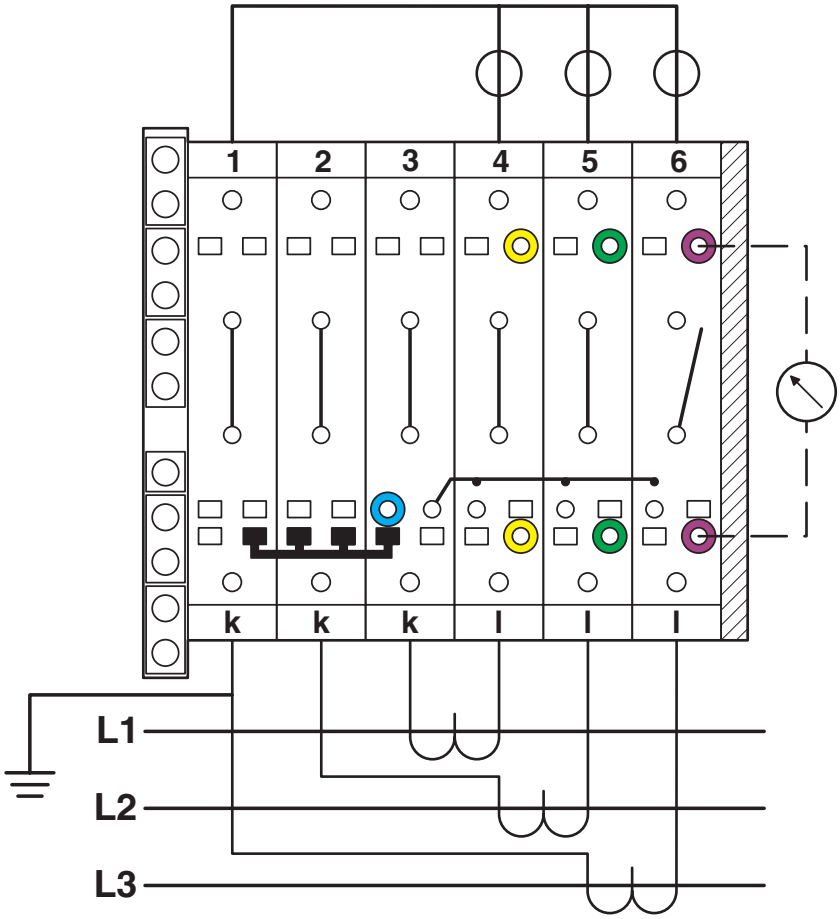

Three-phase linked transducer test set

Circuit diagram

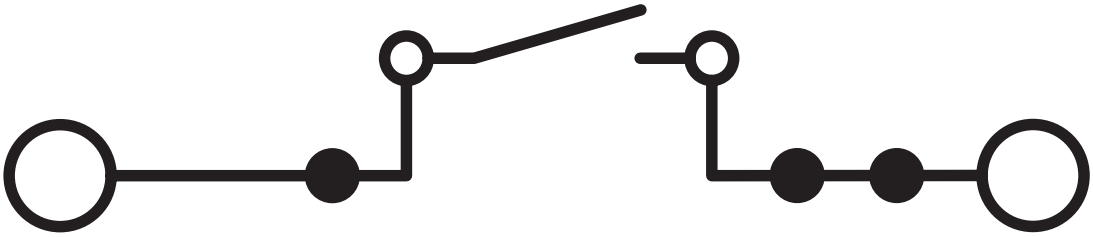

Approvals

To download certificates, visit the product detail page: https://www.phoenixcontact.com/us/products/3049990

EAC
Approval ID: RU C-DE.A*30.B.01742

cULus Recognized
Approval ID: E60425

	Nominal Voltage U_N	Nominal Current I_N	Cross Section AWG	Cross Section mm^2
Use group B				
	600 V	30 A	NA - NA	-
Use group C				
	600 V	30 A	NA - NA	-

EAC
Approval ID: RU C-DE.BL08.B.00540

Classifications

ECLASS

ECLASS-11.0	27141126
ECLASS-12.0	27141126
ECLASS-13.0	27250101

ETIM

ETIM 8.0	EC000902

UNSPSC

UNSPSC 21.0	39121400

Environmental Product Compliance

China RoHS	Environmentally friendly use period: unlimited = EFUP-e
	No hazardous substances above threshold values

Accessories

Note: Applying some accessories below might limit this product.

FBS 2-8 - Plug-in bridge

3030284

https://www.phoenixcontact.com/us/products/3030284

Plug-in bridge, pitch: 8.2 mm, number of positions: 2, color: red

Max. current carrying capacity: 41 A

FBS 3-8 - Plug-in bridge

3030297

https://www.phoenixcontact.com/us/products/3030297

Plug-in bridge, pitch: 8.2 mm, number of positions: 3, color: red

Max. current carrying capacity: 41 A

FBS 4-8 - Plug-in bridge

3030307

https://www.phoenixcontact.com/us/products/3030307

Plug-in bridge, pitch: 8.2 mm, number of positions: 4, color: red

Max. current carrying capacity: 41 A

FBS 5-8 - Plug-in bridge

3030310

https://www.phoenixcontact.com/us/products/3030310

Plug-in bridge, pitch: 8.2 mm, number of positions: 5, color: red

Max. current carrying capacity: 41 A

FBS 10-8 - Plug-in bridge

3030323

https://www.phoenixcontact.com/us/products/3030323

Plug-in bridge, pitch: 8.2 mm, number of positions: 10, color: red

Max. current carrying capacity: 41 A

FBSR 2-8 - Plug-in bridge

3033808

https://www.phoenixcontact.com/us/products/3033808

Plug-in bridge, pitch: 8.2 mm, number of positions: 2, color: red

Max. current carrying capacity: 32 A

FBSR 3-8 - Plug-in bridge

3001597

https://www.phoenixcontact.com/us/products/3001597

Plug-in bridge, pitch: 8.2 mm, number of positions: 3, color: red

Max. current carrying capacity: 32 A

FBSR 4-8 - Plug-in bridge

3000585

https://www.phoenixcontact.com/us/products/3000585

Plug-in bridge, pitch: 8.2 mm, number of positions: 4, color: red

Max. current carrying capacity: 32 A

FBSR 5-8 - Plug-in bridge

3033809

https://www.phoenixcontact.com/us/products/3033809

Plug-in bridge, pitch: 8.2 mm, number of positions: 5, color: red

Max. current carrying capacity: 32 A

FBSR 10-8 - Plug-in bridge

3001599

https://www.phoenixcontact.com/us/products/3001599

Plug-in bridge, pitch: 8.2 mm, number of positions: 10, color: red

Max. current carrying capacity: 32 A

FBSRH 2-8 - Short-circuit connector

3033802

https://www.phoenixcontact.com/us/products/3033802

Short-circuit connector, pitch: 8.2 mm, number of positions: 2, color: red

Max. current carrying capacity: 32 A

FBSRH 3-8 - Short-circuit connector

3033803

https://www.phoenixcontact.com/us/products/3033803

Short-circuit connector, pitch: 8.2 mm, number of positions: 3, color: red

Max. current carrying capacity: 32 A

FBSRH 4-8 - Short-circuit connector

3033804

https://www.phoenixcontact.com/us/products/3033804

Short-circuit connector, pitch: 8.2 mm, number of positions: 4, color: red

Max. current carrying capacity: 32 A

FBS 2-8 CT - Plug-in bridge

3033830

https://www.phoenixcontact.com/us/products/3033830

Plug-in bridge, pitch: 8.2 mm, number of positions: 2, color: orange

Max. current carrying capacity: 41 A

FBS 3-8 CT - Plug-in bridge

3033831

https://www.phoenixcontact.com/us/products/3033831

Plug-in bridge, pitch: 8.2 mm, number of positions: 3, color: orange

Max. current carrying capacity: 41 A

FBS 4-8 CT - Plug-in bridge

3033832

https://www.phoenixcontact.com/us/products/3033832

Plug-in bridge, pitch: 8.2 mm, number of positions: 4, color: orange

Max. current carrying capacity: 41 A

FBS 10-8 CT - Plug-in bridge

3033833

https://www.phoenixcontact.com/us/products/3033833

Plug-in bridge, pitch: 8.2 mm, number of positions: 10, color: orange

Max. current carrying capacity: 41 A

FBS 2-8 BU - Plug-in bridge

3032567

https://www.phoenixcontact.com/us/products/3032567

Plug-in bridge, pitch: 8.2 mm, number of positions: 2, color: blue

Max. current carrying capacity: 41 A

FBS 3-8 BU - Plug-in bridge

3032570

https://www.phoenixcontact.com/us/products/3032570

Plug-in bridge, pitch: 8.2 mm, number of positions: 3, color: blue

Max. current carrying capacity: 41 A

FBS 4-8 BU - Plug-in bridge

3032583

https://www.phoenixcontact.com/us/products/3032583

Plug-in bridge, pitch: 8.2 mm, number of positions: 4, color: blue

Max. current carrying capacity: 41 A

FBS 5-8 BU - Plug-in bridge

3032596

https://www.phoenixcontact.com/us/products/3032596

Plug-in bridge, pitch: 8.2 mm, number of positions: 5, color: blue

Max. current carrying capacity: 41 A

FBS 6-8 BU - Plug-in bridge

3032677

https://www.phoenixcontact.com/us/products/3032677

Plug-in bridge, pitch: 8.2 mm, number of positions: 6, color: blue

Max. current carrying capacity: 41 A

FBS 10-8 BU - Plug-in bridge

3032606

https://www.phoenixcontact.com/us/products/3032606

Plug-in bridge, pitch: 8.2 mm, number of positions: 10, color: blue

Max. current carrying capacity: 41 A

SB-MER 2-8 - Switching jumper

3000587

https://www.phoenixcontact.com/us/products/3000587

Switching jumper, pitch: 8.2 mm, number of positions: 2, length: 25 mm, color: gray/orange

Max. current carrying capacity: 25 A

RB UT 6-ST(2,5/4) - Reducing bridge

3047264

https://www.phoenixcontact.com/us/products/3047264

Reducing bridge, pitch: 9.5 mm, number of positions: 2, length: 33 mm, color: red

Max. current carrying capacity: 35 A

RB UT 6-(2,5/4) - Reducing bridge

3047251

https://www.phoenixcontact.com/us/products/3047251

Reducing bridge, pitch: 9.5 mm, number of positions: 2, length: 25 mm, color: red

Max. current carrying capacity: 40 A

D-RT 5-T - End cover

3049291

https://www.phoenixcontact.com/us/products/3049291

End cover, length: 90.4 mm, width: 2.2 mm, height: 42.2 mm, color: gray

TPNS-UK - Partition plate

0706647

https://www.phoenixcontact.com/us/products/0706647

Partition plate, length: 80 mm, width: 2 mm, height: 70 mm, color: gray

BE-RT 3/5 - Path extension

3049819

https://www.phoenixcontact.com/us/products/3049819

Path extension, color: gray

SHN 8 - Tool

1209868

https://www.phoenixcontact.com/us/products/1209868

Socket wrench, wrench size 8 mm

S-RT 5-T - Switching lock

3049330

https://www.phoenixcontact.com/us/products/3049330

Switching lock, length: 15.65 mm, width: 8.3 mm, height: 26.5 mm, color: white

TS-UT 6-T/SP - Separating plate

3072821

https://www.phoenixcontact.com/us/products/3072821

Separating plate, length: 105.2 mm, width: 1 mm, height: 67.5 mm, color: gray

NS 35/ 7,5 PERF 2000MM - DIN rail perforated

0801733

https://www.phoenixcontact.com/us/products/0801733

DIN rail perforated, acc. to EN 60715, material: Steel, galvanized, passivated with a thick layer, Standard profile, color: silver, Pack of 25 (50 m)

NS 35/ 7,5 UNPERF 2000MM - DIN rail, unperforated

0801681

https://www.phoenixcontact.com/us/products/0801681

DIN rail, unperforated, acc. to EN 60715, material: Steel, galvanized, passivated with a thick layer, Standard profile, color: silver, Pack of 25 (50 m)

NS 35/ 7,5 WH PERF 2000MM - DIN rail perforated

1204119

https://www.phoenixcontact.com/us/products/1204119

DIN rail perforated, acc. to EN 60715, material: Steel, Galvanized, white passivated, Standard profile, color: silver, Pack of 25 (50 m)

NS 35/ 7,5 WH UNPERF 2000MM-VPE 10 - DIN rail, unperforated

1204122

https://www.phoenixcontact.com/us/products/1204122

DIN rail, unperforated, acc. to EN 60715, material: Steel, Galvanized, white passivated, Standard profile, color: silver, Pack of 10 (20 m)

NS 35/ 7,5 AL UNPERF 2000MM - DIN rail, unperforated

0801704

https://www.phoenixcontact.com/us/products/0801704

DIN rail, unperforated, acc. to EN 60715, material: Aluminum, uncoated, Standard profile, color: silver, Pack of 25 (50 m)

NS 35/ 7,5 ZN PERF 2000MM - DIN rail perforated

1206421

https://www.phoenixcontact.com/us/products/1206421

DIN rail perforated, acc. to EN 60715, material: Steel, galvanized, Standard profile, color: silver, Pack of 25 (50 m)

NS 35/ 7,5 ZN UNPERF 2000MM - DIN rail, unperforated

1206434

https://www.phoenixcontact.com/us/products/1206434

DIN rail, unperforated, acc. to EN 60715, material: Steel, galvanized, Standard profile, color: silver, Pack of 25 (50 m)

NS 35/ 7,5 CU UNPERF 2000MM-VPE 10 - DIN rail, unperforated

0801762

https://www.phoenixcontact.com/us/products/0801762

DIN rail, unperforated, acc. to EN 60715, material: Copper, uncoated, Standard profile, color: copper-colored, Pack of 10 (20 m)

NS 35/ 7,5 CAP - End cap

1206560

https://www.phoenixcontact.com/us/products/1206560

DIN rail end piece, for DIN rail NS 35/7.5

NS 35/15 PERF 2000MM - DIN rail perforated

1201730

https://www.phoenixcontact.com/us/products/1201730

DIN rail perforated, similar to EN 60715, material: Steel, galvanized, passivated with a thick layer, Standard profile, color: silver, Pack of 25 (50 m)

NS 35/15 UNPERF 2000MM - DIN rail, unperforated

1201714

https://www.phoenixcontact.com/us/products/1201714

DIN rail, unperforated, similar to EN 60715, material: Steel, galvanized, passivated with a thick layer, Standard profile, color: silver, Pack of 25 (50 m)

NS 35/15 WH PERF 2000MM - DIN rail perforated

0806602

https://www.phoenixcontact.com/us/products/0806602

DIN rail perforated, similar to EN 60715, material: Steel, Galvanized, white passivated, Standard profile, color: white, Pack of 25 (50 m)

NS 35/15 WH UNPERF 2000MM-VPE 10 - DIN rail, unperforated

1204135

https://www.phoenixcontact.com/us/products/1204135

DIN rail, unperforated, similar to EN 60715, material: Steel, Galvanized, white passivated, Standard profile, color: silver, Pack of 10 (20 m)

NS 35/15 AL UNPERF 2000MM - DIN rail, unperforated

1201756

https://www.phoenixcontact.com/us/products/1201756

DIN rail, unperforated, similar to EN 60715, material: Aluminum, uncoated, Standard profile, color: silver

NS 35/15 ZN PERF 2000MM - DIN rail perforated

1206599

https://www.phoenixcontact.com/us/products/1206599

DIN rail perforated, similar to EN 60715, material: Steel, galvanized, Standard profile, color: silver, Pack of 25 (50 m)

NS 35/15 ZN UNPERF 2000MM - DIN rail, unperforated

1206586

https://www.phoenixcontact.com/us/products/1206586

DIN rail, unperforated, similar to EN 60715, material: Steel, galvanized, Standard profile, color: silver, Pack of 25 (50 m)

NS 35/15 CU UNPERF 2000MM-VPE 10 - DIN rail, unperforated

1201895

https://www.phoenixcontact.com/us/products/1201895

DIN rail, unperforated, similar to EN 60715, material: Copper, uncoated, Standard profile, color: copper-colored, Pack of 10 (20 m)

NS 35/15 CAP - End cap

1206573

https://www.phoenixcontact.com/us/products/1206573

DIN rail end piece, for DIN rail NS 35/15

NS 35/15-2,3 UNPERF 2000MM-VPE 10 - DIN rail, unperforated

1201798

https://www.phoenixcontact.com/us/products/1201798

DIN rail, unperforated, acc. to EN 60715, material: Steel, galvanized, passivated with a thick layer, Standard profile 2.3 mm, color: silver, Pack of 10 (20 m)

ZB 16:UNPRINTED - Zack marker strip

0827461

https://www.phoenixcontact.com/us/products/0827461

Zack marker strip, Strip, white, unlabeled, can be labeled with: PLOTMARK, CMS-P1-PLOTTER, mounting type: snapped, for terminal block width: 16 mm, lettering field size: 16 x 10.5 mm, Number of individual labels: 50

ZB 16 CUS - Zack marker strip

0827463

https://www.phoenixcontact.com/us/products/0827463

Zack marker strip, can be ordered: Strip, white, labeled according to customer specifications, mounting type: snap into tall marker groove, for terminal block width: 16 mm, lettering field size: 10.5 x 16 mm, Number of individual labels: 5

ZB 16,LGS:L1-N,PE - Zack marker strip

0827462

https://www.phoenixcontact.com/us/products/0827462

Zack marker strip, Strip, white, labeled, printed horizontally: L1, L2, L3, N, PE, mounting type: snapped, for terminal block width: 16.3 mm, lettering field size: 10.5 x 16.25 mm, Number of individual labels: 5

UC-TM 16 - Marker for terminal blocks

0819217

https://www.phoenixcontact.com/us/products/0819217

Marker for terminal blocks, Sheet, white, unlabeled, can be labeled with: BLUEMARK ID COLOR, BLUEMARK ID, BLUEMARK CLED, PLOTMARK, CMS-P1-PLOTTER, mounting type: snapped, for terminal block width: 16 mm, lettering field size: 15.45 x 10.5 mm, Number of individual labels: 32

UC-TM 16 CUS - Marker for terminal blocks

0824621

https://www.phoenixcontact.com/us/products/0824621

Marker for terminal blocks, can be ordered: by sheet, white, labeled according to customer specifications, mounting type: snap into tall marker groove, for terminal block width: 16 mm, lettering field size: 15.45 x 10.5 mm, Number of individual labels: 32

UCT-TM 16 - Marker for terminal blocks

0829146

https://www.phoenixcontact.com/us/products/0829146

Marker for terminal blocks, Sheet, white, unlabeled, can be labeled with: TOPMARK NEO, TOPMARK LASER, BLUEMARK ID COLOR, BLUEMARK ID, BLUEMARK CLED, THERMOMARK PRIME, THERMOMARK CARD 2.0, THERMOMARK CARD, mounting type: snapped, for terminal block width: 16 mm, lettering field size: 14.8 x 9.6 mm, Number of individual labels: 18

UCT-TM 16 CUS - Marker for terminal blocks

0829637

https://www.phoenixcontact.com/us/products/0829637

Marker for terminal blocks, can be ordered: by sheet, white, labeled according to customer specifications, mounting type: snap into tall marker groove, for terminal block width: 16 mm, lettering field size: 14.8 x 9.6 mm, Number of individual labels: 18

ZB 16,3:UNPRINTED - Zack marker strip

0820222

https://www.phoenixcontact.com/us/products/0820222

Zack marker strip, Strip, white, unlabeled, can be labeled with: PLOTMARK, CMS-P1-PLOTTER, mounting type: snapped, for terminal block width: 16.3 mm, lettering field size: 10.5 x 16.25 mm, Number of individual labels: 5

ZB 16,3 CUS - Zack marker strip

0824946

https://www.phoenixcontact.com/us/products/0824946

Zack marker strip, can be ordered: Strip, white, labeled according to customer specifications, mounting type: snap into tall marker groove, for terminal block width: 16.3 mm, lettering field size: 10.5 x 16.25 mm, Number of individual labels: 5

MPS-MT - Test plugs

0201744

https://www.phoenixcontact.com/us/products/0201744

Test plugs, with solder connection up to 1 mm^2 conductor cross section, number of positions: 1, color: gray

MPS-IH WH - Insulating sleeve

0201663

https://www.phoenixcontact.com/us/products/0201663

Insulating sleeve, color: white

MPS-IH RD - Insulating sleeve

0201676

https://www.phoenixcontact.com/us/products/0201676

Insulating sleeve, color: red

MPS-IH BU - Insulating sleeve

0201689

https://www.phoenixcontact.com/us/products/0201689

Insulating sleeve, color: blue

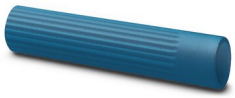

MPS-IH YE - Insulating sleeve

0201692

https://www.phoenixcontact.com/us/products/0201692

Insulating sleeve, color: yellow

MPS-IH GN - Insulating sleeve

0201702

https://www.phoenixcontact.com/us/products/0201702

Insulating sleeve, color: green

MPS-IH GY - Insulating sleeve

0201728

https://www.phoenixcontact.com/us/products/0201728

Insulating sleeve, color: gray

MPS-IH BK - Insulating sleeve

0201731

https://www.phoenixcontact.com/us/products/0201731

Insulating sleeve, color: black

PAI-4-N GY - Test adapter

3032871

https://www.phoenixcontact.com/us/products/3032871

4 mm test adapter, for terminal blocks with 5.2 mm, 6.2 mm and 8.2 mm pitch

PS-8 - Test plugs

3031005

https://www.phoenixcontact.com/us/products/3031005

Test plugs, Modular test plug, number of positions: 1, color: red

DP PS-8 - Spacer plate

3036741

https://www.phoenixcontact.com/us/products/3036741

Spacer plate, length: 22.4 mm, width: 8.2 mm, height: 29 mm, number of positions: 1, color: red

PS-8/2,3MM RD - Test plugs

3048564

https://www.phoenixcontact.com/us/products/3048564

Test plugs, number of positions: 1, color: red

CLIPFIX 35 - End clamp

3022218

https://www.phoenixcontact.com/us/products/3022218

Quick mounting end clamp for NS 35/7,5 DIN rail or NS 35/15 DIN rail, with marking option, width: 9.5 mm, color: gray

CLIPFIX 35-5 - End clamp

3022276

https://www.phoenixcontact.com/us/products/3022276

Quick mounting end clamp for NS 35/7,5 DIN rail or NS 35/15 DIN rail, with marking option, with parking option for FBS...5, FBS...6, KSS 5, KSS 6, width: 5. 15 mm, color: gray

E/NS 35 N - End clamp

0800886

https://www.phoenixcontact.com/us/products/0800886

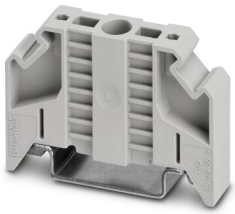

End clamp, width: 9.5 mm, color: gray

E/UK - End clamp

1201442

https://www.phoenixcontact.com/us/products/1201442

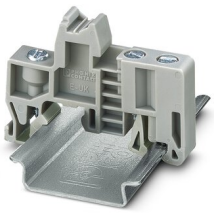

End clamp, material: PA, color: gray, Mounting on a DIN rail NS 32 or NS 35

E/UK 1 - End clamp

1201413

https://www.phoenixcontact.com/us/products/1201413

End clamps, for supporting the ends of double-level and three-level terminal blocks, width: 10 mm, color: gray

Phoenix Contact 2023 © - all rights reserved
https://www.phoenixcontact.com

Phoenix Contact USA
586 Fulling Mill Road
Middletown, PA 17057, United States
(+717) 944-1300
info@phoenixcon.com